Construction of Connector

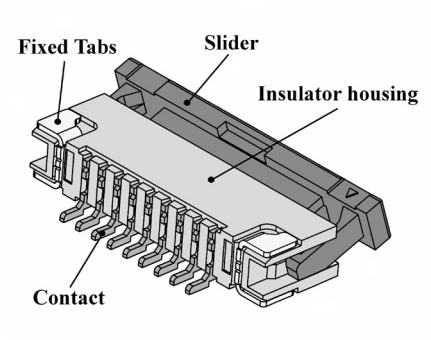

◎ Zero Insertion Force Type (ZIF)

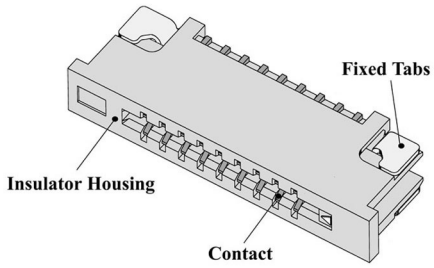

◎ Low Insertion Force Type (LIF)

Applications

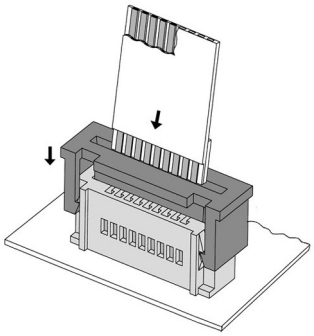

◎ Top Entry

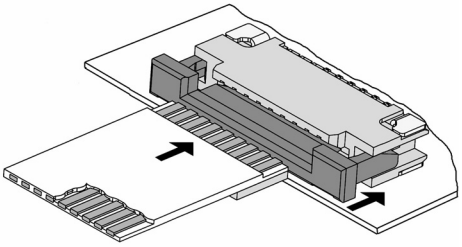

◎ Side Entry to Upside Contact Connector

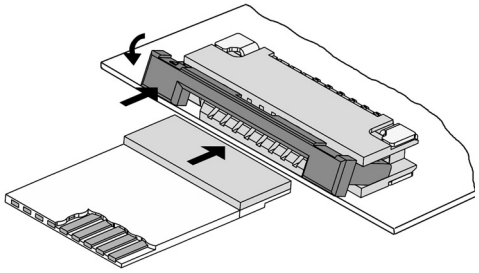

◎ Side Entry to Downside Contact Connector

Connection Combinations of Connector and FFC Cable

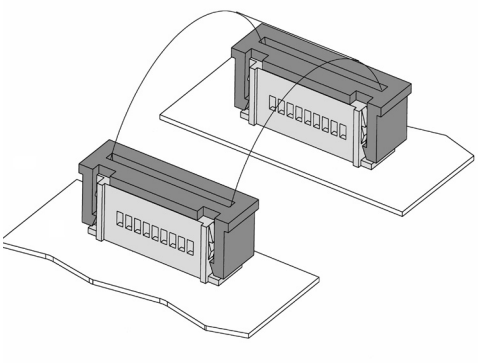

Both Ends with Zero Insertion Force Type Connector

◎ Top Entry to Top Entry

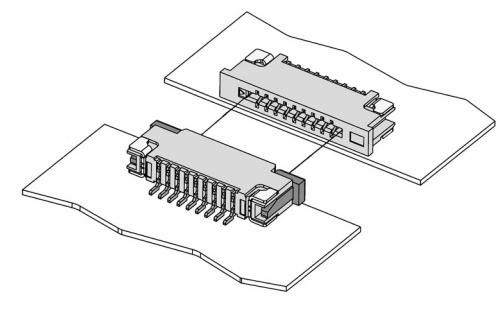

Low Insertion Force Connector to Zero Insertion Force Connector

◎ Side Entry to Side Entry

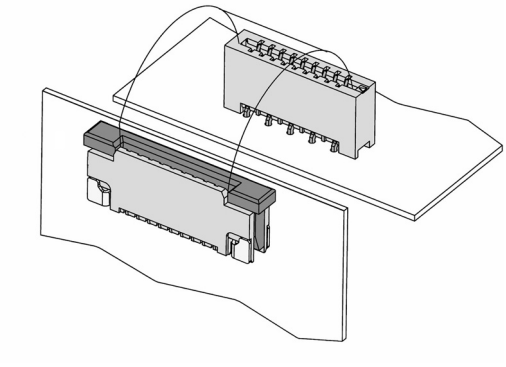

Low Insertion Force Connector to Zero Insertion Force Connector

◎ Top Entry to Side Entry

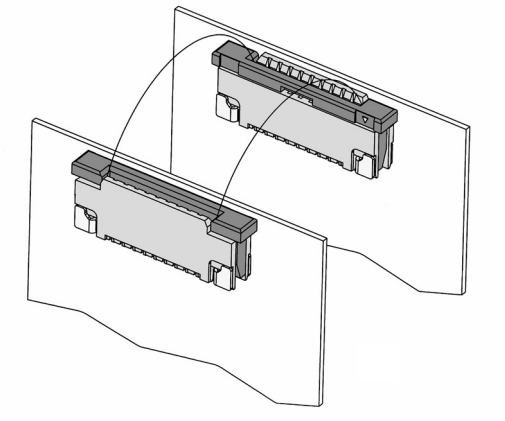

Both Ends with Zero Insertion Force Connector

◎ Side Entry to Side Entry

CF54 Series 0.30mm(.012")H=0.90 SMT ZIF FFC/FPC Connectors(Back Flip)

NEW

- ◎ 0.90mm above the board
- ◎ FPC zero insertion force and high holding force
- ◎ Insulation: High temperature plastic UL 94V-0, Color Black
- ◎ Cover: High temperature plastic UL 94V-0, Color Nature
- ◎ Designed easy for FPC installation and reliable operation

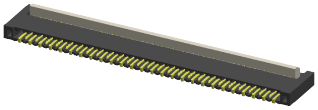

RoHS Compliant Pb HF

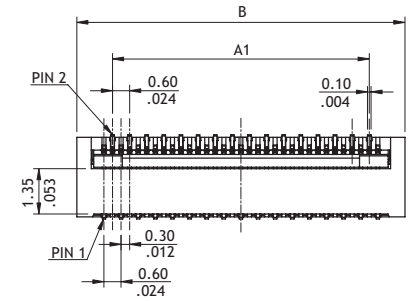

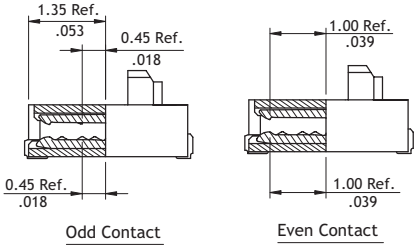

A = 0.3 *(No. of Contacts-1)
A1 = A - 0.6
B = A + 2.5
C = A + 1.23

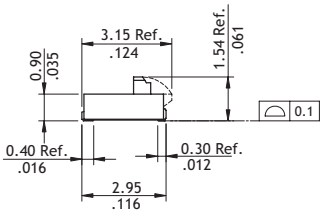

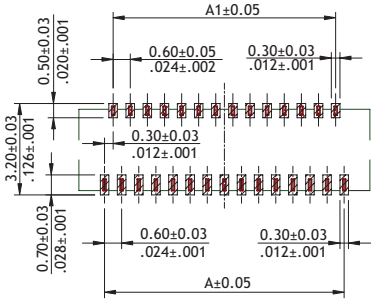

Recommended P.C. Board Layout

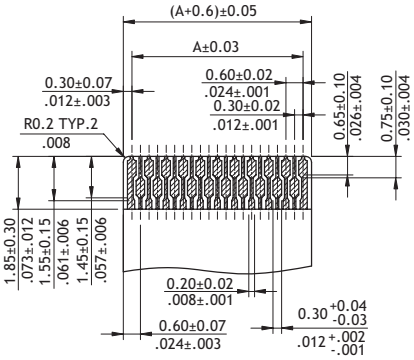

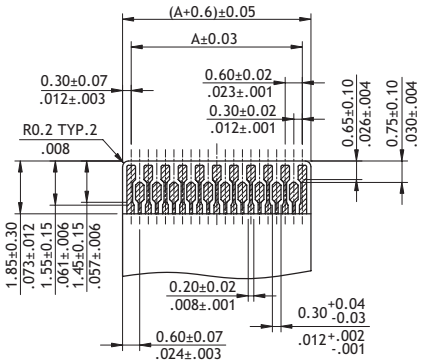

Recommended FPC Dimension
(Thickness: 0.2±0.03mm)

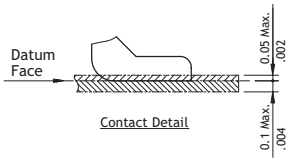

Contact Detail

Ordering Code

❶	❷	❸	❹	❺	❻	❼		❽
CF54	51	2	H	0	R	0	–	NH

❶ Series No.
❷ No. of Circuits: 07 to 71
(Available: 23, 25, 33, 39, 45, 51)
Circuits not found above please consult manufacturer
❸ Plating Code:
1 = Matte Tin plated over Nickel
2 = Gold flash over Nickel plated
❹ Contact Style: H = Side Entry
❺ Color: 0 = Black
❻ Packing: R = Tape & Reel
❼ Other Options: 0 = Standard
❽ -NH = For Lead Free IR process and Halogen-Free

CF43 Series 0.30mm(.012")H=1.00 SMT ZIF FFC/FPC Connectors (Back Flip)

◎ 1.0mm above the board
◎ FPC zero insertion force and high retention force
◎ Insulator: High temperature plastic UL 94V-0, Color Nature
◎ Cover: High temperature plastic UL 94V-0, Color Black
◎ Designed easy for FPC installation and reliable operation
◎ With metal fixed tabs to secure connector in place

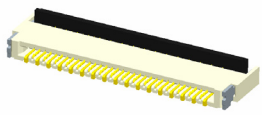

RoHS Compliant Pb HF

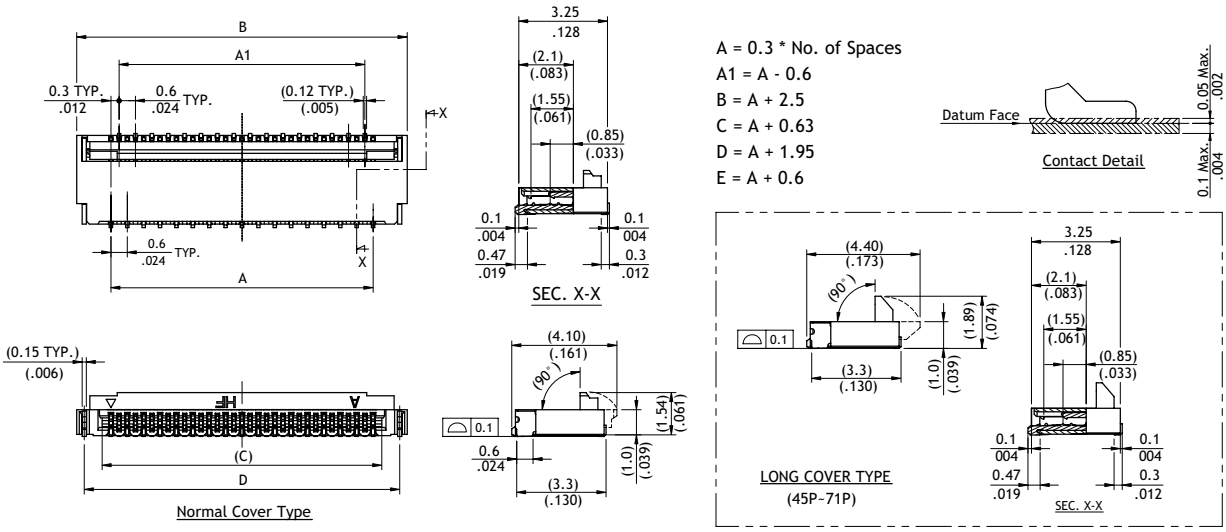

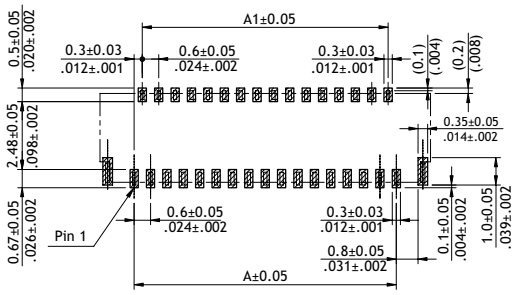

Recommended P.C. Board Layout

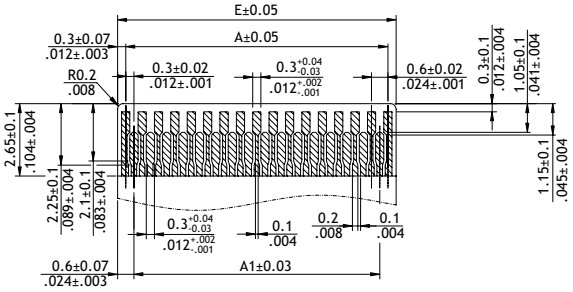

Recommended FPC Dimension
Thickness: 0.2±0.03mm

Ordering Code

❶	❷	❸	❹	❺	❻	❼		❽
CF43	51	2	H	0	R	0	–	NH

❶ Series No.
❷ No. of Circuits: 09 to 71
9~43pin: Normal Cover Type
45~71pin: Long Cover Type
(Available: 11,15,21,25,31, 33,39,45,51)
Circuits not found above please consult manufacturer

❸ Plating Code:
1 = Matte Tin over Nickel
2 = Gold flash over Nickel
❹ Contact Style:
H = Dual Side Contact
❺ Color: 0 = Nature

❻ Packing:
R = Tape & Reel
❼ Other Options:
0 = Standard
❽ -NH = For Lead Free IR process and Halogen-Free

CF38 Series 0.30mm(.012")H=1.00 SMT ZIF One-Touch FFC/FPC Connectors

◎ 1.0mm above the board
◎ FPC zero insertion force and high retention force
◎ Insulator: High temperature plastic UL 94V-0, Color Black
◎ Cover: High temperature plastic UL 94V-0, Color Nature
◎ Designed easy for FPC installation and reliable operation
◎ With metal fixed tabs to secure connector in place

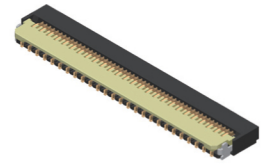

RoHS Compliant Pb HF

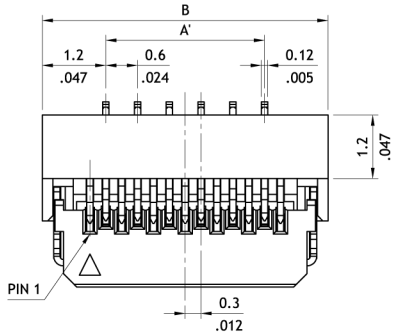

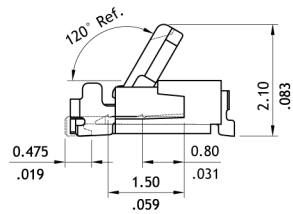

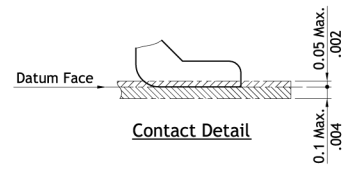

Contact Detail

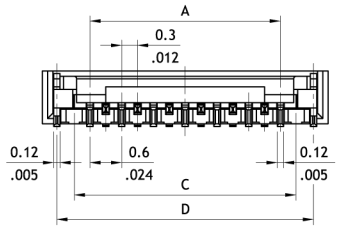

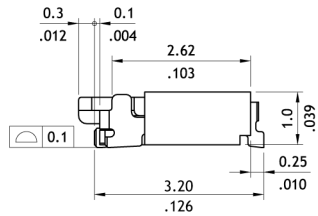

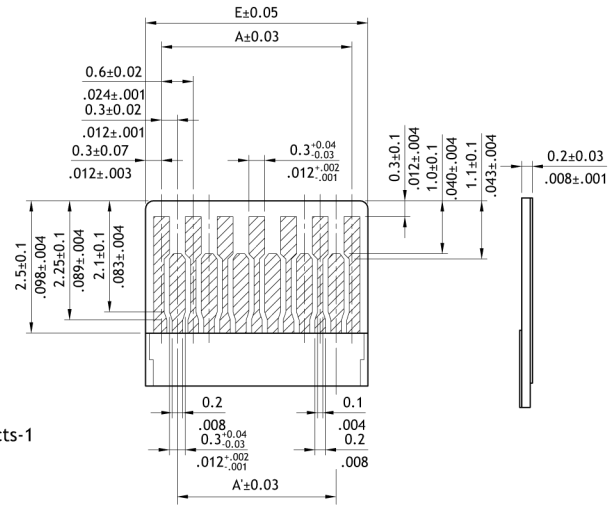

Recommended FPC Dimension
(Thickness: 0.2±0.03mm)

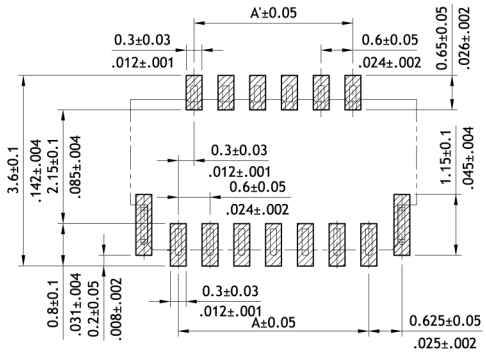

Recommended P.C. Board Layout

A = 0.3 * No. of Contacts-1
A' = A - 0.6
B = A + 1.8
C = A + 0.63
D = A + 1.25
E = A + 0.6

Ordering Code

❶	❷	❸	❹	❺	❻	❼		❽
CF38	39	2	D	1	R	0	–	NH

❶ Series No.
❷ No. of Circuits: 13 to 71
(Available: 13,15,21,23,25,31,35, 39,41,45,51,57,61,71)
Circuits not found above please consult manufacturer

❸ Plating Code:
2 = Gold flash over Nickel
❹ Contact Style:
D = Downside Contact
❺ Color: 1 = Black

❻ Packing:
R = Tape & Reel
❼ Other Options:
0 = Standard
❽ -NH = For Lead Free IR process and Halogen-Free

CF30 Series 0.30mm(.012")H=1.25 SMT ZIF One-Touch FFC/FPC Connectors

◎ 1.25mm above the board
◎ FPC zero insertion force and high retention force
◎ Insulator: High temperature plastic UL 94V-0, Color Nature
◎ Cover: High temperature plastic UL 94V-0, Color Black
◎ Designed easy for FPC installation and reliable operation
◎ With metal fixed tabs to secure connector in place
◎ Accepts 0.2mm thickness FPC

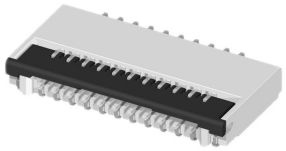

RoHS Compliant

A = 0.3 * (No. of Contacts - 1)
A1= A - 0.6
B = A + 2.6
C = A + 0.63

P/N CF30**2D0RA-NH

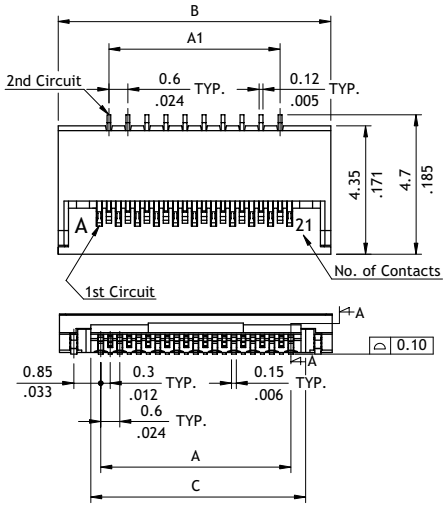

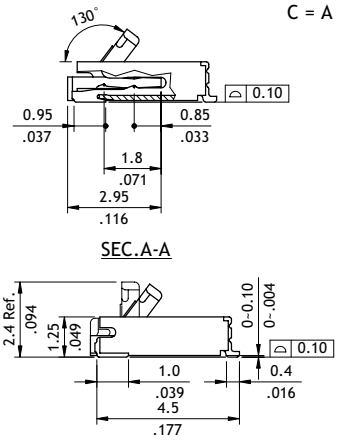

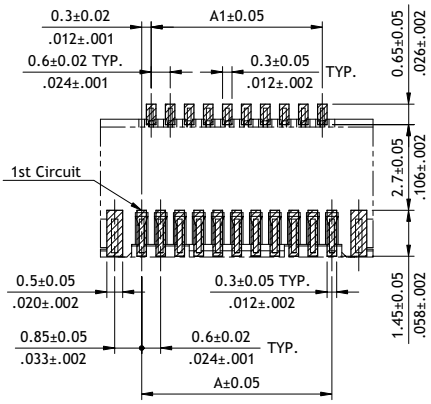

Recommended P.C. Board Layout

P/N CF30**2D0RB-NH

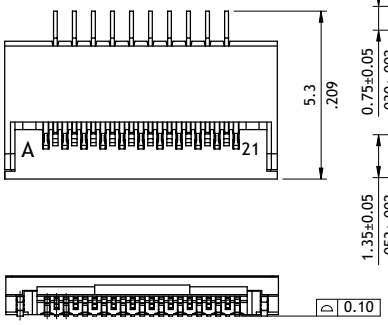

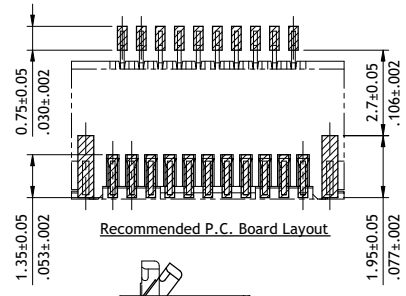

Recommended P.C. Board Layout

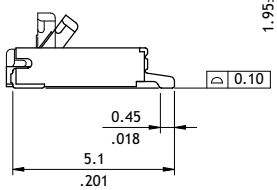

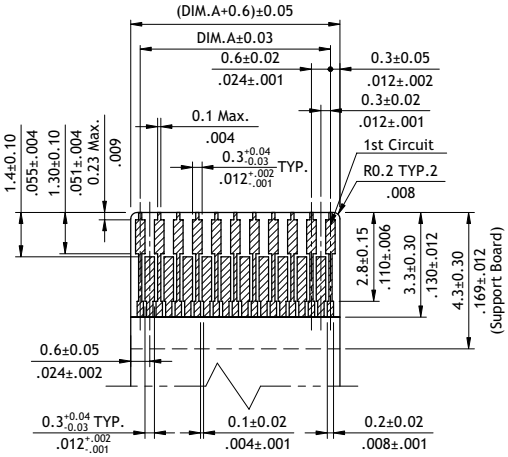

Recommended FPC Dimension
(Thickness: 0.2±0.03mm)

Ordering Code

❶ ❷ ❸ ❹ ❺ ❻ ❼ ❽
CF30 45 2 D 0 R A – NH

❶ Series No.
❷ No.of Circuits: 11 to 45
(Available: 11,21,25,31,35,37, 39,45)
Circuits not found above please consult manufacturer

❸ Plating Code:
2 = Gold flash over Nickel
❹ Contact Style:
D = Downside Contact
❺ Color: 0 = Nature
❻ Packing:
R = Tape & Reel

❼ Other Options:
A = Lead-Less Type, B = Lead Type
* Special options consult manufacturer
❽ -NH = For Lead Free soldering process and Halogen-Free

CF42 Series 0.50mm(.020")H=0.96 SMT ZIF FFC/FPC Connectors (Back Flip)

NEW

- ◎ 0.96mm above the board
- ◎ FFC/FPC zero insertion force and high retentions force
- ◎ Insulator: High temperature plastic UL 94V-0, Color Nature
- ◎ Cover: High temperature plastic UL 94V-0, Color Black
- ◎ Designed easy for FFC/FPC installation and reliable operation
- ◎ With metal fixed tabs to secure connector in place

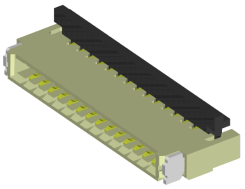

RoHS Compliant Pb HF

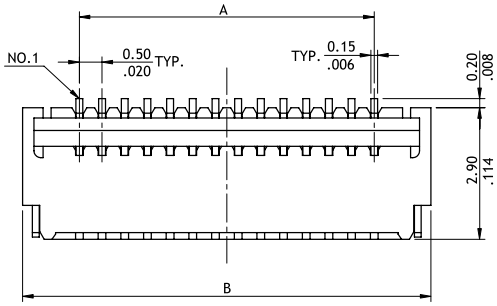

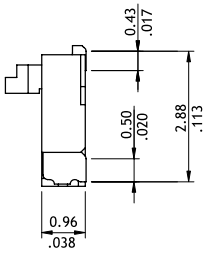

A = 0.5 * No. of Spaces
B = A + 2.5
C = A + 1.05
D = A + 1.92

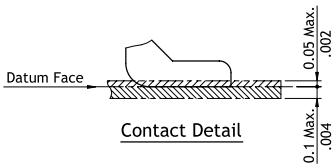

Contact Detail

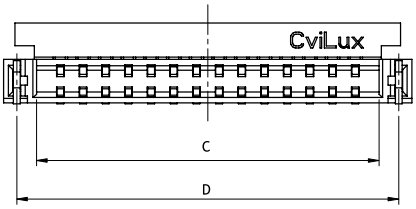

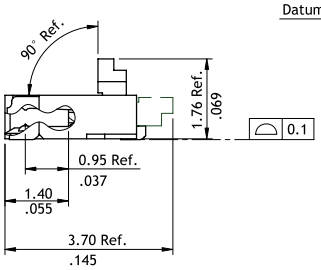

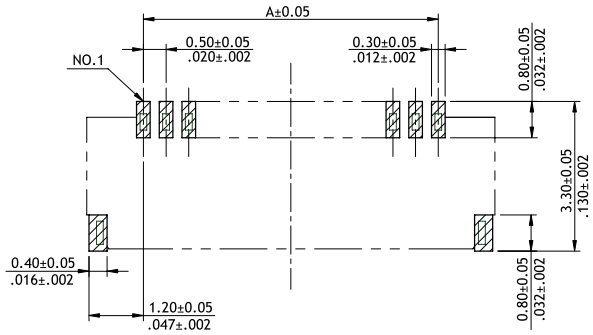

Recommended P.C. Board Layout

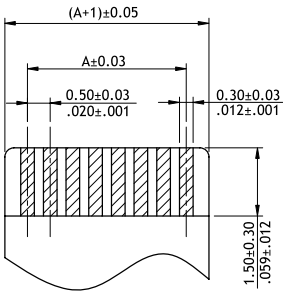

Recommended FPC/FFC Dimension
(Thickness: 0.3±0.03mm)

Ordering Code

❶ ❷ ❸ ❹ ❺ ❻ ❼ ❽ ❾

CF42 20 F H 0 R 0 – 05 – NH

❶ Series No.
❷ No. of Circuits: 04 to 40
(Available: 4,6,8,9,10,12,15, 18,20,26,36)
Circuits not found above please consult manufacturer

❸ Plating Code:
1 = Matte Tin over Nickel
F = Gold flash over Nickel
❹ Contact Style:
H = Dual Side
❺ Color: 0 = Nature

❻ Packing:
R = Tape & Reel
❼ Other Options: 0 = Standard
❽ Pitch: 05 = 0.50 mm
❾ -NH = For Lead Free IR process and Halogen-Free

CF35 Series 0.50mm(.020")H=0.96 SMT ZIF One-Touch FFC/FPC Connectors

- ◎ 0.96mm above the board
- ◎ FFC/FPC zero insertion force and high retention force
- ◎ Insulation: High temperature plastic UL 94V-0, Color Nature
- ◎ Cover: High temperature plastic UL 94V-0, Color Black
- ◎ Actuator designed easy for FFC/FPC installation and reliable operation
- ◎ With metal fixed tabs to secure connector in place

NEW

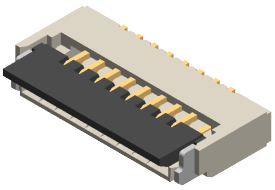

RoHS Compliant Pb HF

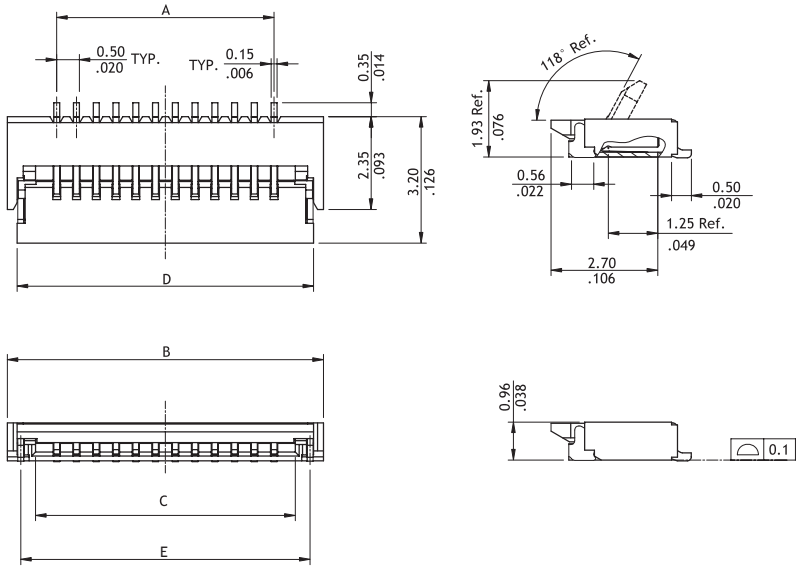

A = 0.5 x No. of Spaces
B = A + 2.5
C = A + 1.07
D = A + 2.0
E = A + 1.82

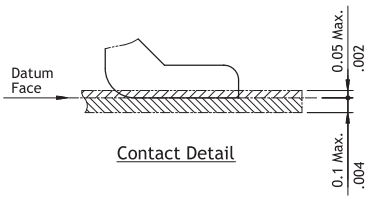

Contact Detail

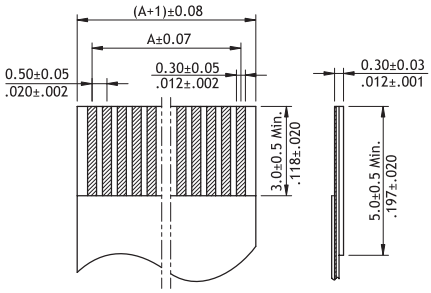

Accommodated FFC/FPC

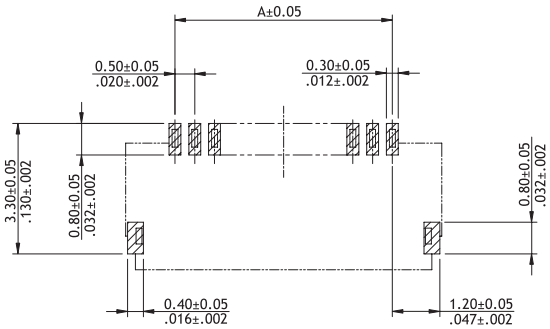

Recommended P.C. Board Layout

Ordering Code

❶	❷	❸	❹	❺	❻	❼		❽
CF35	12	2	D	0	R	0	–	NH

❶ Series No.

❷ No. of Circuits: 04 to 50
(Available: 12)
Circuits not found above please consult manufacturer

❸ Plating Code:
2 = Gold flash over Nickel

❹ Contact Style:
D = Downside Contact

❺ Color: 0 = Nature

❻ Packing:
R = Tape & Reel

❼ Other Options:
0 = Standard
*Special option consult manufacturer

❽ -NH = For Lead Free IR process and Halogen-Free

CF39 Series 0.50mm(.020")H=1.00 SMT ZIF One-Touch FFC/FPC Connectors

◎ 1.0mm above the board
◎ FFC/FPC zero insertion force and high retention force
◎ Insulator: High temperature plastic UL 94V-0, Color Nature
◎ Cover: High temperature plastic UL 94V-0, Color Black
◎ Designed easy for FFC/FPC installation and reliable operation
◎ With metal fixed tabs to secure connector in place

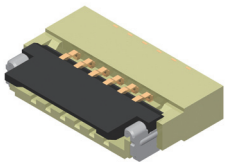

RoHS Compliant Pb HF

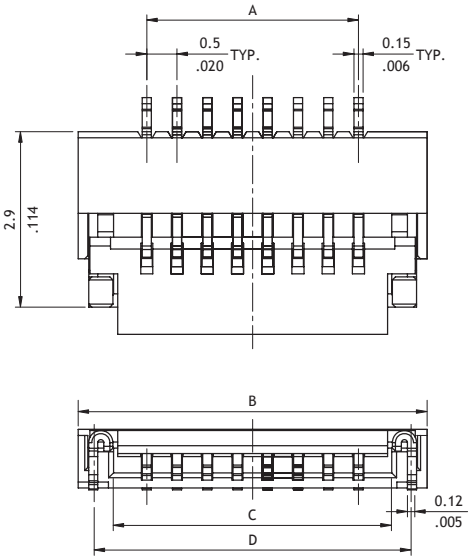

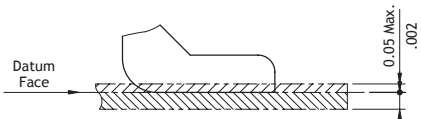

Contact Detail

A = 0.50 x No. of Spaces
B = A + 2.27
C = A + 1.1
D = A + 1.77

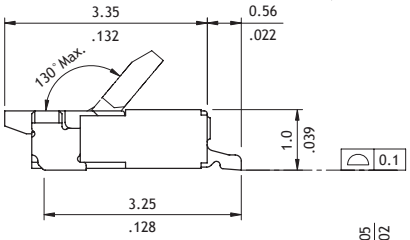

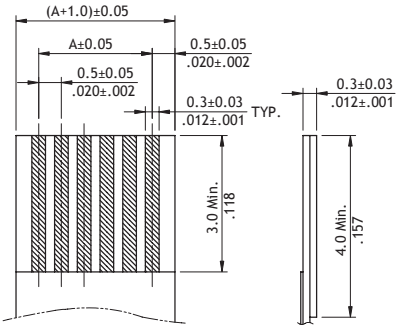

Accommodated FFC/FPC

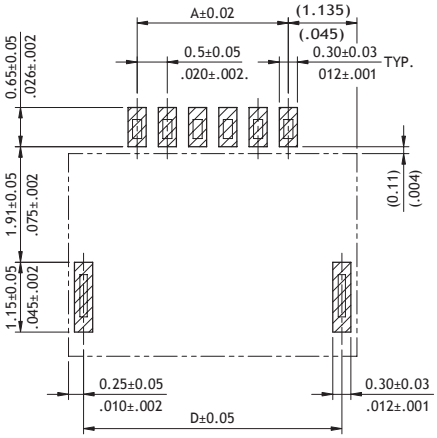

Recommended P.C. Board Layout

Ordering Code

❶	❷	❸	❹	❺	❻	❼		❽
CF39	50	2	D	0	R	0	–	NH

❶ Series No.
❷ No. of Circuits: 04 to 50
(Available: 4,6,8,10,12,14,16, 18,20,22,24,28, 30,32,40)
Circuits not found above please consult manufacturer

❸ Plating Code:
2 = Gold flash over Nickel
❹ Contact Style:
D = Downside Contact
❺ Color: 0 = Nature

❻ Packing:
R = Tape & Reel
❼ Other Options:
0 = Standard
❽ -NH = For Lead Free IR process and Halogen-Free

CF29 Series 0.50mm(.020")H=1.15 SMT ZIF One-Touch FFC/FPC Connectors

- ◎ 1.15mm above the board
- ◎ FFC/FPC zero insertion force and high retention force
- ◎ Insulation: High temperature plastic UL 94V-0, Color Nature
- ◎ Cover: High temperature plastic UL 94V-0, Color Black
- ◎ Actuator designed easy for FFC/FPC installation and reliable operation
- ◎ With metal fixed tabs to secure connector in place

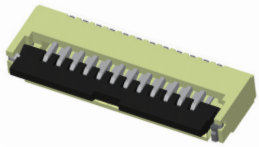

RoHS Compliant Pb HF

Circuits: 4~39

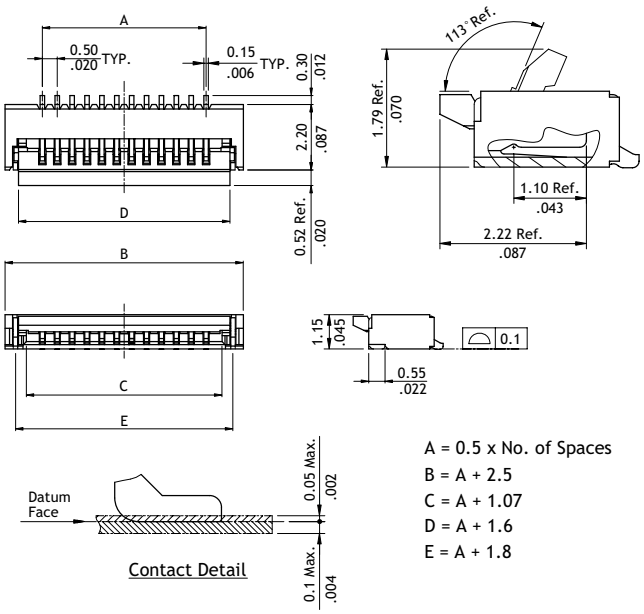

A = 0.5 x No. of Spaces
B = A + 2.5
C = A + 1.07
D = A + 1.6
E = A + 1.8

Circuits: 40

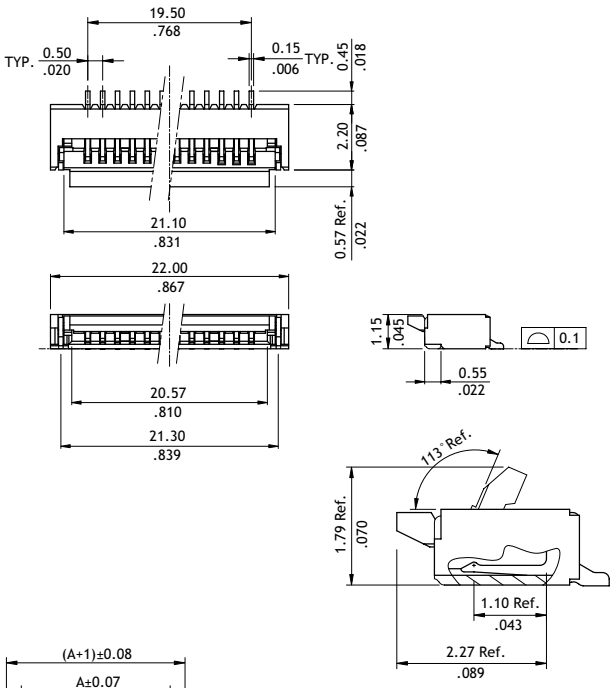

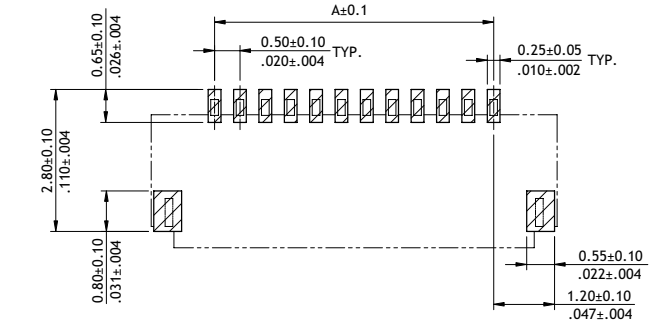

Recommended P.C. Board Layout

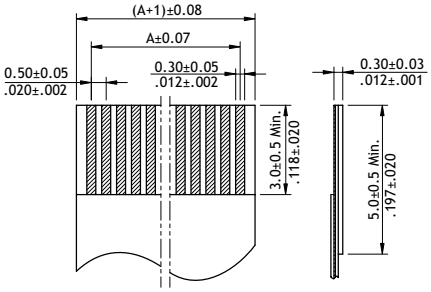

Accommodated FFC/FPC

Ordering Code

❶ ❷ ❸ ❹ ❺ ❻ ❼ ❽

CF29 14 2 D 0 R 0 – NH

❶ Series No.

❷ No. of Circuits: 04 to 40
(Available: 8,10,12,14,40)
Circuits not found above please consult manufacturer

❸ Plating Code:
2 = Gold flash over Nickel

❹ Contact Style:
D = Downside Contact

❺ Color: 0 = Nature

❻ Packing:
R = Tape & Reel

❼ Other Options:
0 = Standard
*Special options consult manufacturer

❽ -NH = For Lead Free IR process and Halogen-Free

CF55 Series 0.50mm(.020")H=1.25 SMT ZIF FFC/FPC Connectors

- ◎ 1.25mm above the board
- ◎ FFC/FPC zero insertion force and high holding force
- ◎ Insulation: High temperature plastic UL 94V-0, Color Nature
- ◎ Cover: High temperature plastic UL 94V-0, Color Black
- ◎ Actuator designed easy for FFC/FPC installation and reliable operation
- ◎ With metal fixed tabs to secure connector in place

NEW

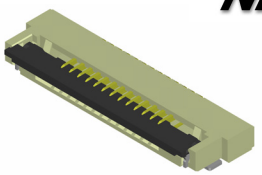

RoHS Compliant Pb HF

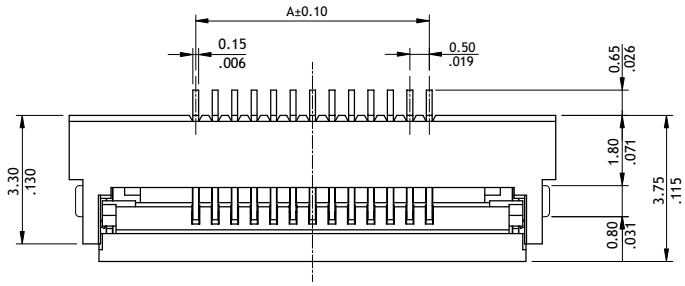

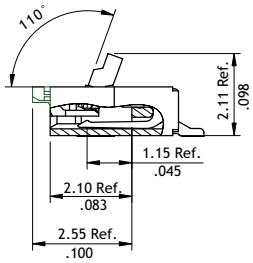

Cover opened state

A = 0.5 x No. of Spaces
B = A + 6.5
C = A + 1.45
D = A + 2.8

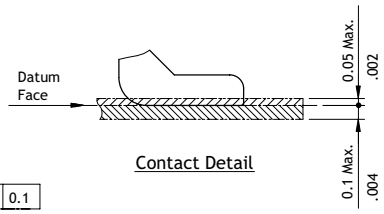

Contact Detail

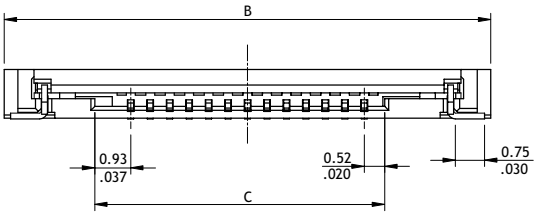

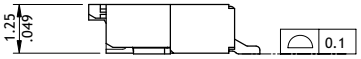

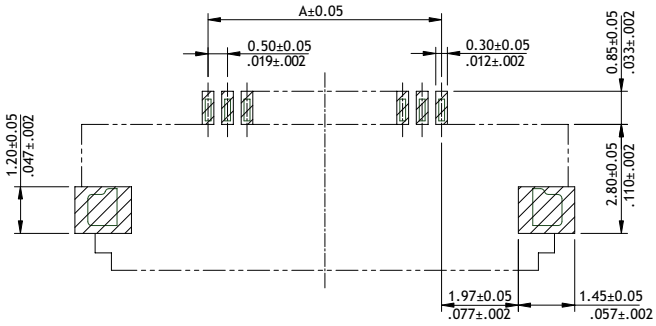

Recommended P.C. Board Layout

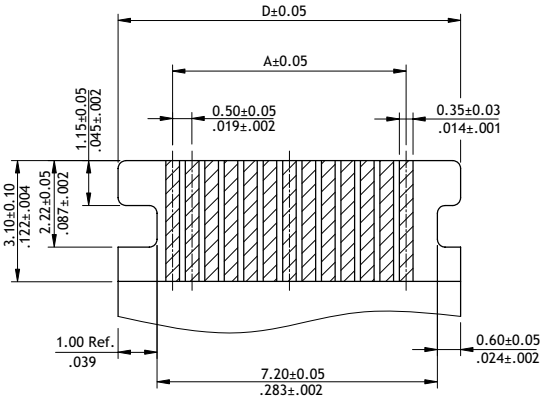

Recommended FPC/FFC Dimension
(Thickness: 0.3±0.03mm)

Ordering Code

❶	❷	❸	❹	❺	❻	❼		❽
CF55	12	1	D	0	R	0	–	NH

❶ Series No.

❷ No. of Circuits: 06 to 14
(Available: 6,11,12,13,14)
Circuits not found above please consult manufacturer

❸ Plating Code:
1 = Matte Tin over Nickel
F = Selective Gold Flash over Nickel

❹ Contact Style:
D = Downside Contact

❺ Color: 0 = Nature

❻ Packing:
R = Tape & Reel

❼ Other Options:
0 = Without Mylar (Standard)

❽ -NH = For Lead Free IR process and Halogen-Free

CF41 Series 0.50mm(.020")H=1.30 SMT ZIF FFC/FPC Connectors (Back Flip)

◎ 1.3mm above the board
◎ FPC zero insertion force and high retentions force
◎ Insulator: High temperature plastic UL 94V-0, Color Nature
◎ Cover: High temperature plastic UL 94V-0, Color Black
◎ Designed easy for FFC/FPC installation and reliable operation
◎ With metal fixed tabs to secure connector in place

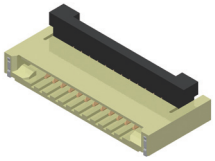

RoHS Compliant Pb HF

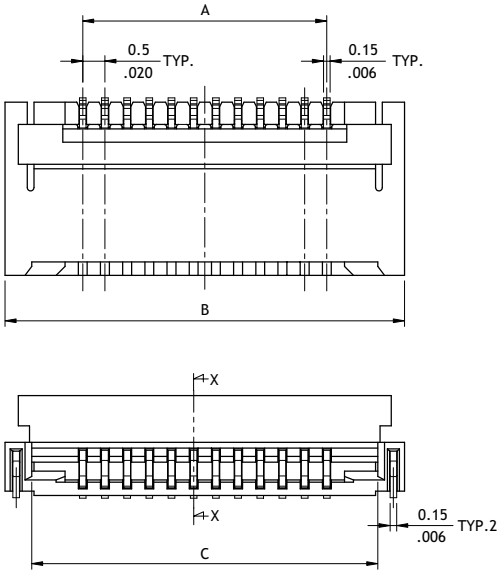

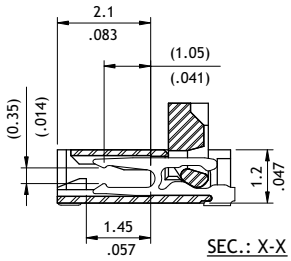

A = 0.5 * No. of Spaces
B = A + 3.5
C = A + 2.3

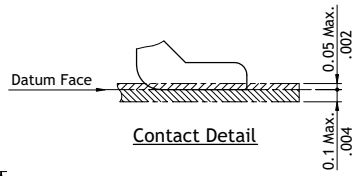

Contact Detail

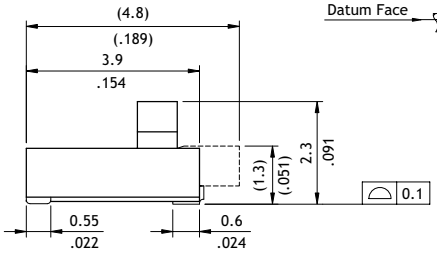

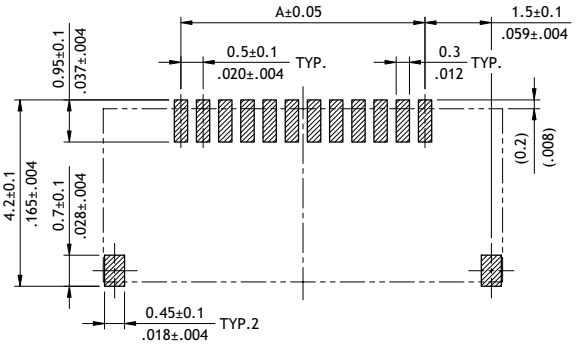

Recommended P.C. Board Layout

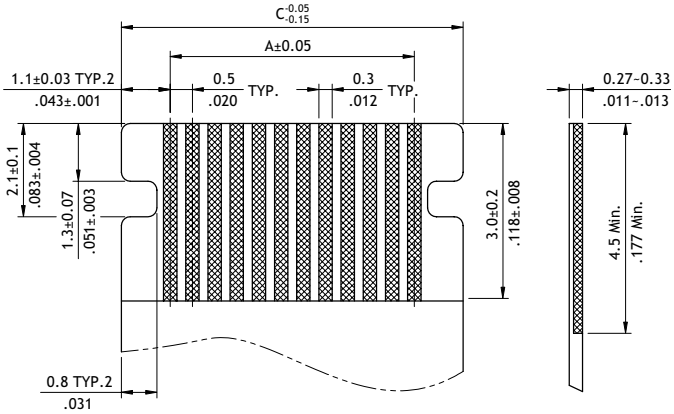

Recommended FPC Dimension

Ordering Code

❶	❷	❸	❹	❺	❻	❼		❽
CF41	15	2	H	0	R	0	–	NH

❶ Series No.
❷ No. of Circuits: 04 to 30
(Available: 6,8,12,15)
Circuits not found above please consult manufacturer

❸ Plating Code:
2 = Gold flash over Nickel
❹ Contact Style:
H = Dual Side
❺ Color: 0 = Nature
❻ Packing Options:
R = Tape & Reel

❼ Other Options:
0 = Standard
*Special option consult manufacturer
❽ -NH = For Lead Free IR process and Halogen-Free

CF50 Series 0.50mm(.020")H=1.46 SMT ZIF One-Touch FFC/FPC Connectors

◎ 1.46mm above the board
◎ FFC/FPC zero insertion force and high retention force
◎ Insulation: High temperature plastic UL 94V-0, Color Nature
◎ Cover: High temperature plastic UL 94V-0, Color Black
◎ Actuator designed easy for FFC/FPC installation and reliable operation
◎ With metal fixed tabs to secure connector in place

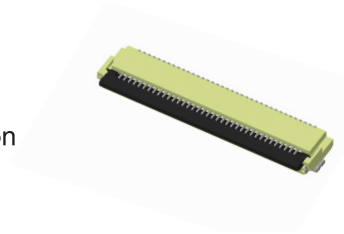

RoHS Compliant Pb HF

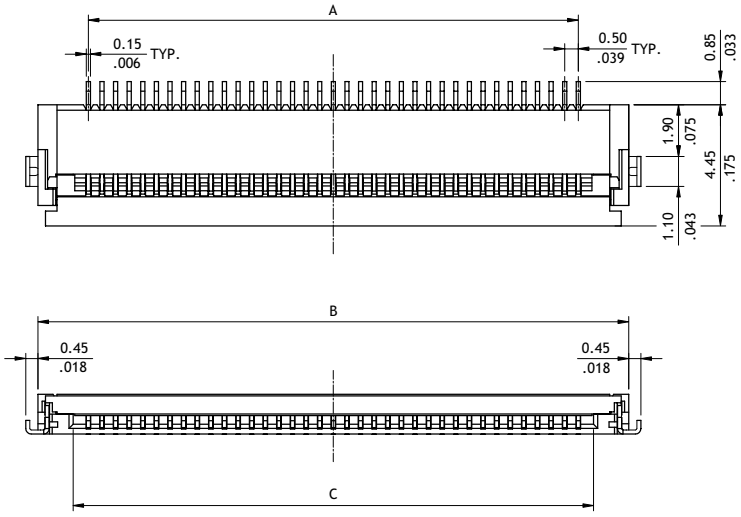

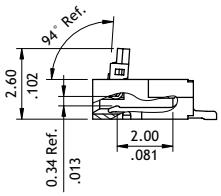

A = 0.5 x No. of Spaces
B = A + 3.7
C = A + 1.12

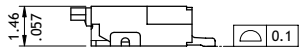

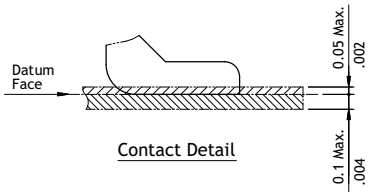

Contact Detail

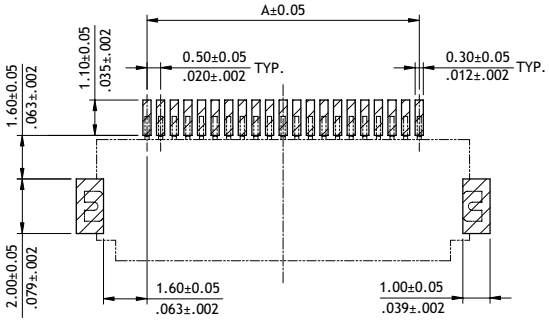

Recommended P.C. Board Layout

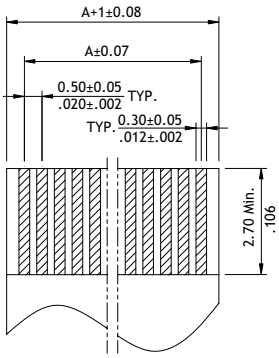

Recommended FPC/FFC Dimension
(Thickness: 0.3±0.03mm)

Ordering Code

❶ ❷ ❸ ❹ ❺ ❻ ❼ ❽ ❾
CF50 53 1 D 0 R 0 – 05 – NH

❶ Series No.
❷ No. of Circuits: 04 to 61
(Available: 4,6,8,9,10,11,12,13,14, 15,16,17,18,20,26,28, 30,36,37,40,49,53,61)
Circuits not found above please consult manufacturer

❸ Plating Code:
1 = Matte Tin over Nickel
F = Selective Gold flash over Nickel
❹ Contact Style:
D = Downside Contact
❺ Color: 0 = Nature

❻ Packing: R = Tape & Reel
❼ Other Options:
0 = Standard
❽ Pitch: 05 = 0.50 mm
❾ -NH = For Lead Free IR process and Halogen-Free

CF50 Series 1.00mm(.039")H=1.46 SMT ZIF One-Touch FFC/FPC Connectors

◎ 1.46mm above the board
◎ FFC/FPC zero insertion force and high retention force
◎ Insulation: High temperature plastic UL 94V-0, Color Nature
◎ Cover: High temperature plastic UL 94V-0, Color Black
◎ Actuator designed easy for FFC/FPC installation and reliable operation
◎ With metal fixed tabs to secure connector in place

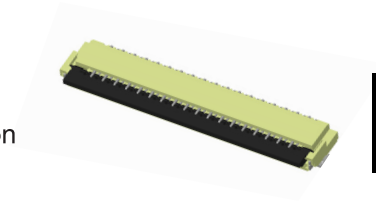

RoHS Compliant Pb HF

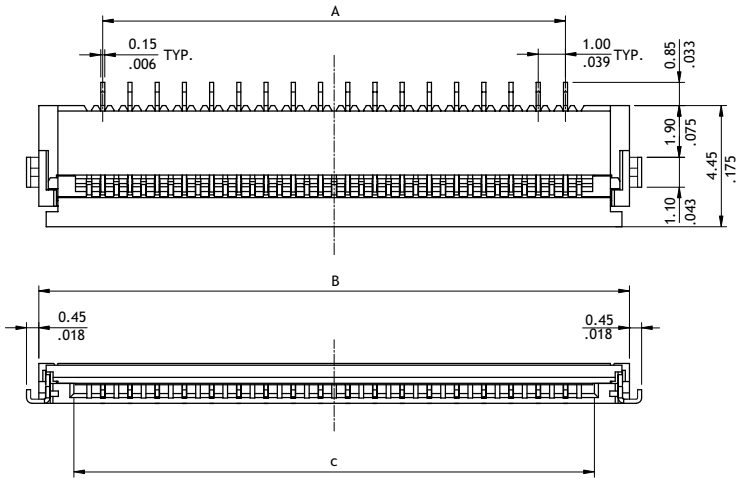

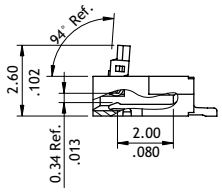

A = 1.0 x No. of Spaces
B = A + 4.7
C = A + 2.12

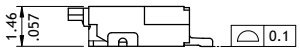

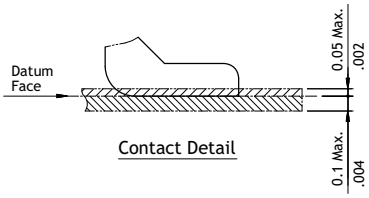

Contact Detail

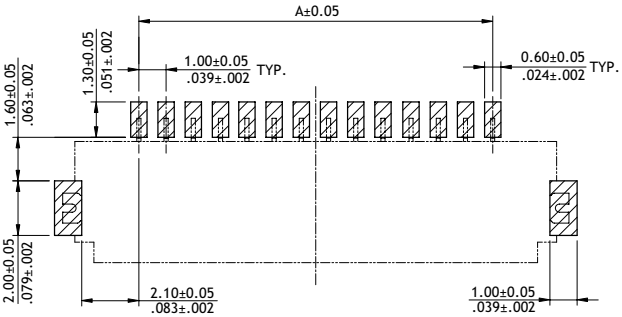

Recommended P.C. Board Layout

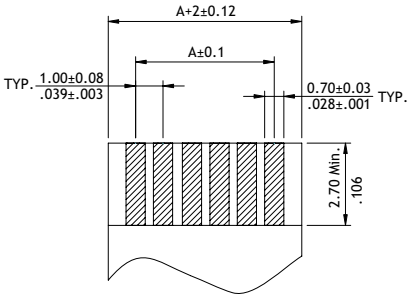

Recommended FPC/FFC Dimension
(Thickness: 0.3±0.03mm)

Ordering Code

❶ ❷ ❸ ❹ ❺ ❻ ❼ ❽ ❾
CF50 26 1 D 0 R 0 – 10 – NH

❶ Series No.
❷ No. of Circuits: 04 to 30
(Available: 4,6,8,10,18,24,26,30)
Circuits not found above please consult manufacturer

❸ Plating Code:
1 = Matte Tin over Nickel
F = Selective Gold flash over Nickel
❹ Contact Style:
D = Downside Contact
❺ Color: 0 = Nature

❻ Packing: R = Tape & Reel
❼ Other Options:
0 = Standard
❽ Pitch: 10 = 1.00 mm
❾ -NH = For Lead Free IR process and Halogen-Free

CF61 Series 0.50mm(.020")H=1.75 SMT ZIF One-Touch FFC/FPC Connectors

- ◎ 1.75mm above the board
- ◎ FFC/FPC zero insertion force and high holding force
- ◎ Insulation: High temperature plastic UL 94V-0, Color Nature
- ◎ Cover: High temperature plastic UL 94V-0, Color Black
- ◎ Actuator designed easy for FFC/FPC installation and reliable operation
- ◎ With metal fixed tabs to secure connector in place

NEW

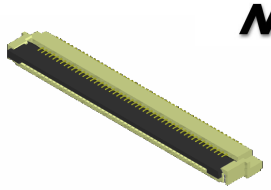

RoHS Compliant Pb HF

3D

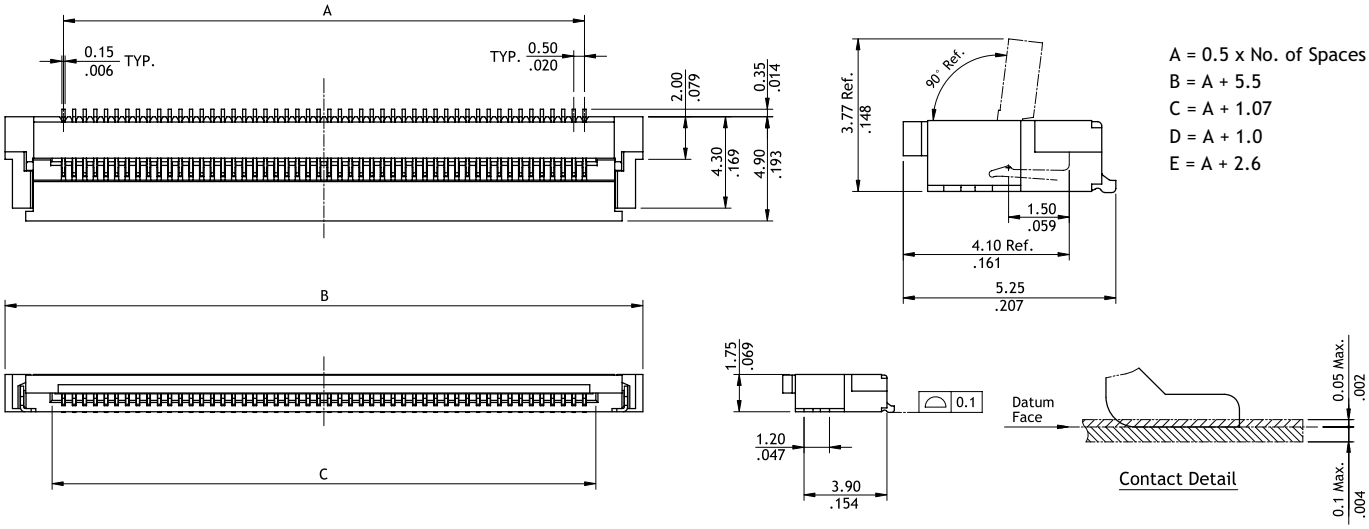

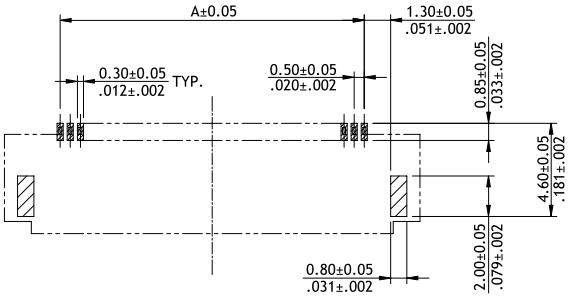

Recommended P.C. Board Layout

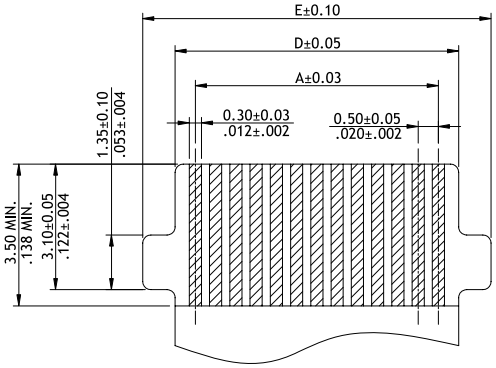

Recommended FPC/FFC Dimension
(Thickness: 0.3±0.03mm)

Ordering Code

❶ ❷ ❸ ❹ ❺ ❻ ❼ ❽ ❾

CF61 40 1 D 0 R 0 – 05 – NH

❶ Series No.

❷ No. of Circuits: 04 to 60
(Available: 10,12,40)
Circuits not found above please consult manufacturer

❸ Plating Code:
1 = Matte Tin over Nickel
F = Selective Gold flash over Nickel

❹ Contact Style:
D = Downside Contact

❺ Color: 0 = Nature

❻ Packing:
R = Tape & Reel

❼ Other Options:
0 = Standard
*Special option consult manufacturer

❽ Pitch: 05 = 0.50 mm

❾ -NH = For Lead Free IR process and Halogen-Free

CF36 Series 0.50mm(.020")H=1.75 SMT ZIF One-Touch FFC/FPC Connectors

- ◎ 1.75mm above the board
- ◎ FFC/FPC zero insertion force and high retention force
- ◎ Insulator: High temperature plastic UL 94V-0, Color Nature
- ◎ Cover: High temperature plastic UL 94V-0, Color Black
- ◎ Designed easy for FFC/FPC installation and reliable operation
- ◎ With metal fixed tabs to secure connector in place

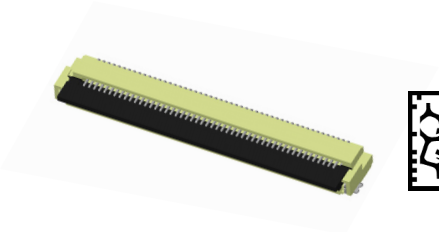

RoHS Compliant Pb HF

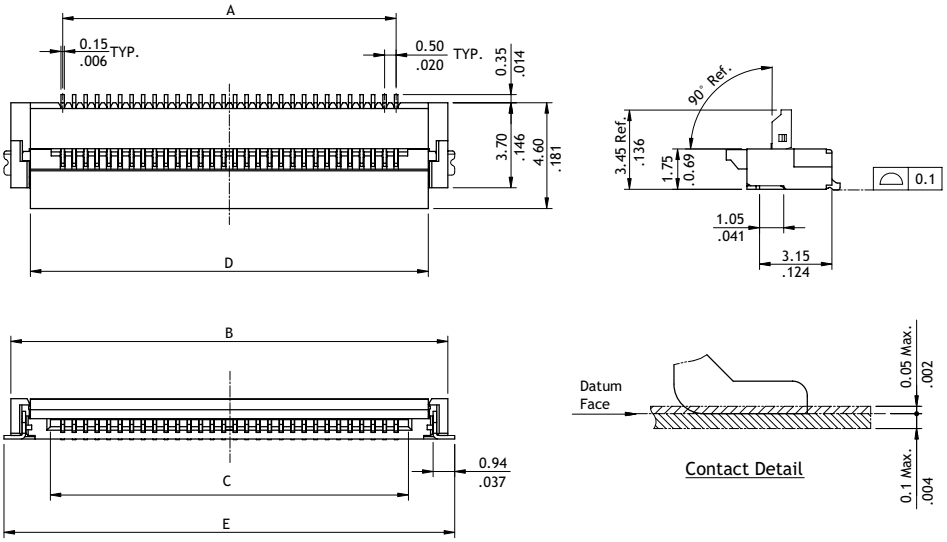

A = 0.5 x No. of Spaces
B = A + 4.5
C = A + 1.1
D = A + 2.8
E = A + 5.1

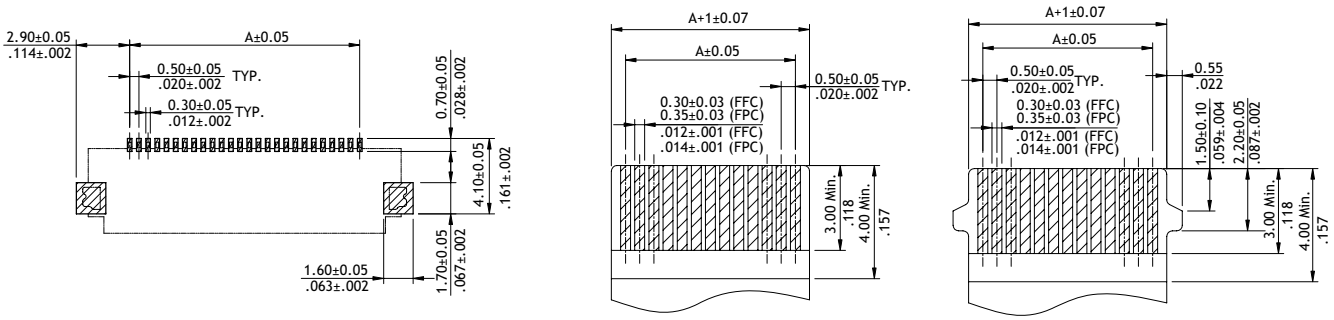

Recommended P.C. Board Layout

Recommended FPC/FFC Dimension
(Thickness: 0.3±0.03mm)

Recommended FPC/FFC Dimension
(Thickness: 0.3±0.03mm)

Ordering Code

❶	❷	❸	❹	❺	❻	❼		❽
CF36	60	2	D	0	R	0	–	NH

❶ Series No.
❷ No. of Circuits: 20 to 60
(Available: 60)
Circuits not found above please consult manufacturer

❸ Plating Code:
1 = Matte Tin over Nickel
2 = Gold flash over Nickel
❹ Contact Style:
D = Downside Contact
❺ Color: 0 = Nature

❻ Packing: R = Tape & Reel
❼ Other Options:
0 = Standard
*Special options consult manufacturer
❽ -NH = For Lead Free IR process and Halogen-Free

CF56 Series 0.50mm(.020")H=1.80 SMT ZIF One-Touch FFC/FPC Connectors

NEW

- ◎ 1.80mm above the board
- ◎ FFC/FPC zero insertion force and high holding force
- ◎ Insulation: High temperature plastic UL 94V-0, Color Nature
- ◎ Cover: High temperature plastic UL 94V-0, Color Black
- ◎ Designed easy for FFC/FPC installation and reliable operation
- ◎ With metal fixed tabs to secure connector in place

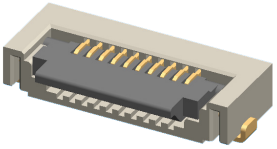

RoHS Compliant Pb HF

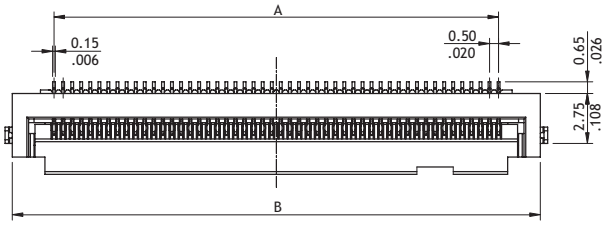

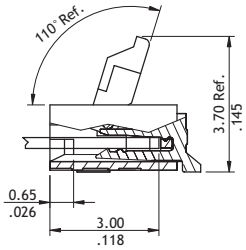

OPEN STATE

A = 0.5 x No. of Spaces
B = A + 4.6
C = A + 1.1
D = A + 5.4
E = A + 1.15
F = A + 2.1
G = A + 1.0
H = A + 2.6
I = A + 5.8

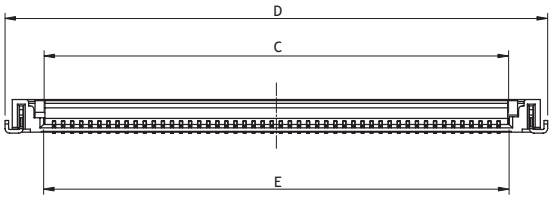

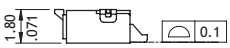

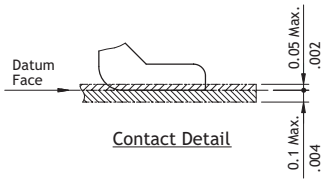

Contact Detail

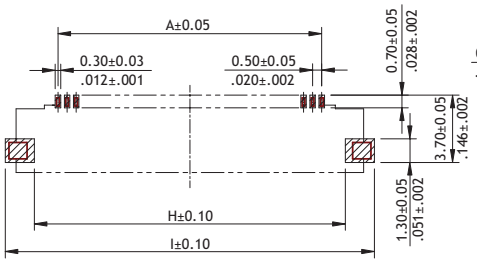

Recommended P.C. Board Layout
(Thickness: T=0.12)

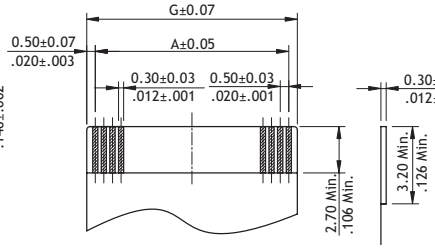

Recommended FPC/FFC Dimension
(Thickness: 0.3±0.03mm)

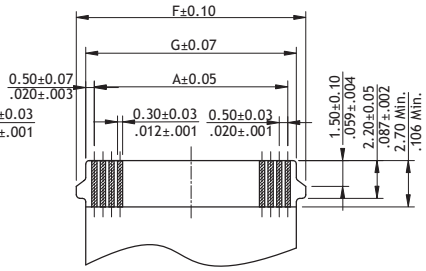

Recommended FPC/FFC Dimension
(Thickness: 0.3±0.03mm)

Ordering Code

❶ ❷ ❸ ❹ ❺ ❻ ❼ ❽

CF56 80 F D 0 R 0 – NH

❶ Series No.
❷ No. of Circuits: 56, 60,80
Circuits not found above please consult manufacturer

❸ Plating Code:
F = Gold flash over Nickel
❹ Contact Style:
D = Downside Contact
❺ Color: 0 = Nature

❻ Packing:
R = Tape & Reel
❼ Other Options:
0 = Standard
❽ -NH = For Lead Free IR process and Halogen-Free

CF31 Series 0.50mm(.020")H=1.95 SMT ZIF One-Touch FFC/FPC Connectors

◎ 1.95mm above the board
◎ FFC/FPC zero insertion force and high holding force
◎ Insulation: High temperature plastic UL 94V-0, Color Nature
◎ Cover: High temperature plastic UL 94V-0, Color Black
◎ Actuator designed easy for FFC/FPC installation and reliable operation
◎ With metal fixed tabs to secure connector in place

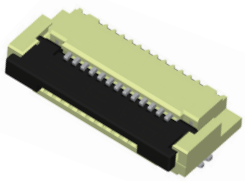

RoHS Compliant Pb HF

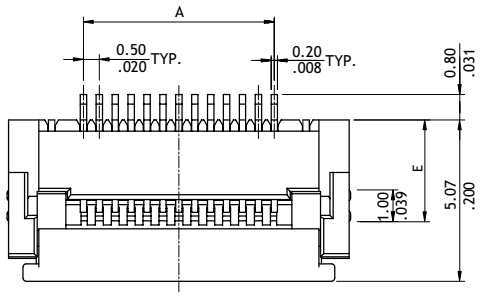

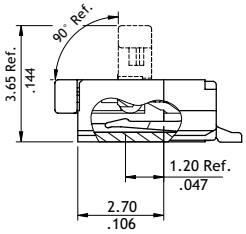

A = 0.5 x No. of Spaces
B = A + 4.7
C = A + 1.1
D = A + 4.8

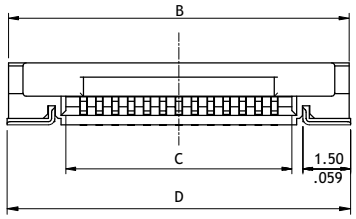

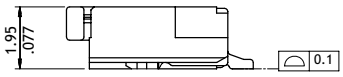

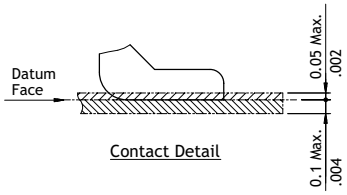

Contact Detail

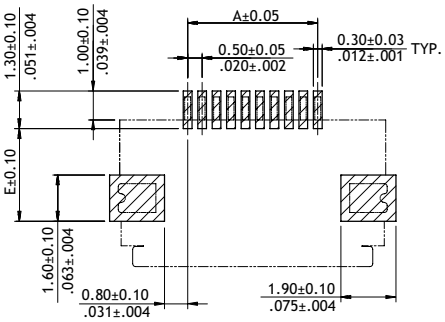

Recommended P.C. Board Layout

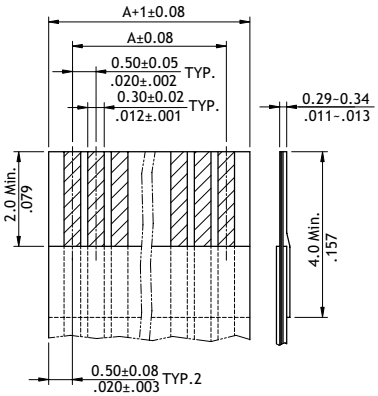

Accommodated FFC/FPC

Ordering Code

❶ ❷ ❸ ❹ ❺ ❻ ❼ ❽ ❾
CF31 30 1 D 0 R 0 – 05 – NH

❶ Series No.
❷ No. of Circuits: 04 to 61
Circuits not found above please consult manufacturer
❸ Plating Code:
1 = Tin over Nickel
2 = Matte Gold flash over Nickel

❹ Contact Style:
D = Downside Contact
❺ Color: 0 = Nature
❻ Packing:
R = Tape & Reel

❼ Other Options:
0 = Without Mylar, E=3.20mm
2 = Without Mylar, E=2.85mm
❽ Pitch: 05 = 0.50 mm
❾ -NH = For Lead Free IR process and Halogen-Free

CF31 Series 1.00mm(.039")H=1.95 SMT ZIF One-Touch FFC/FPC Connectors

- ◎ 1.95mm above the board
- ◎ FFC/FPC zero insertion force and high retention force
- ◎ Insulator: High temperature plastic UL 94V-0, Color Nature
- ◎ Cover: High temperature plastic UL 94V-0, Color Black
- ◎ Designed easy for FFC/FPC installation and reliable operation
- ◎ With metal fixed tabs to secure connector in place

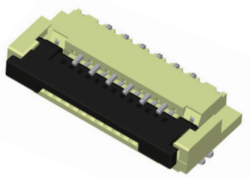

RoHS Compliant Pb HF

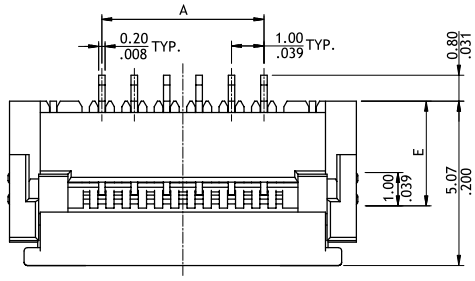

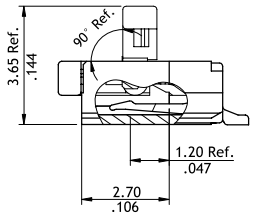

A = 1.0 x No. of Spaces
B = A + 5.7
C = A + 2.1
D = A + 5.8

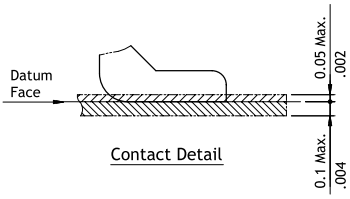

Contact Detail

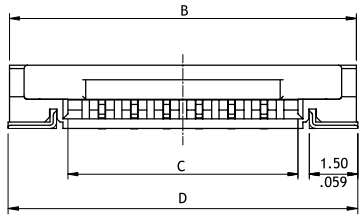

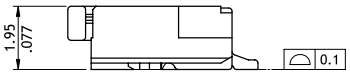

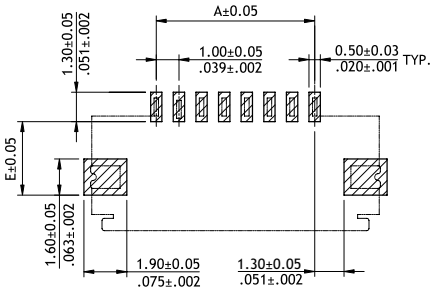

Recommended P.C. Board Layout

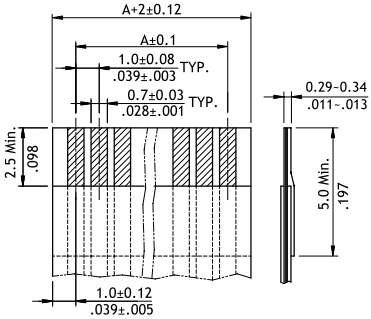

Accommodated FFC/FPC

Ordering Code

❶ ❷ ❸ ❹ ❺ ❻ ❼ ❽ ❾

CF31 26 1 D 0 R 0 – 10 – NH

❶ Series No.

❷ No. of Circuits: 04 to 30
Circuits not found above please consult manufacturer

❸ Plating Code:
1 = Matte Tin over Nickel
2 = Gold flash over Nickel

❹ Contact Style:
D = Downside Contact

❺ Color: 0 = Nature

❻ Packing:
R = Tape & Reel

❼ Other Options:
0 = Without Mylar, E=3.20mm
2 = Without Mylar, E=2.85mm

❽ Pitch: 10 = 1.00 mm

❾ -NH = For Lead Free IR process and Halogen-Free

CF34 Series 0.50mm(.020")H=1.95 SMT ZIF One-Touch FFC/FPC Connectors

◎ 1.95mm above the board
◎ FFC/FPC zero insertion force and high holding force
◎ Insulation: High temperature plastic UL 94V-0, Color Nature
◎ Cover: High temperature plastic UL 94V-0, Color Black
◎ Actuator designed easy for FFC/FPC installation and reliable operation
◎ With metal fixed tabs to secure connector in place

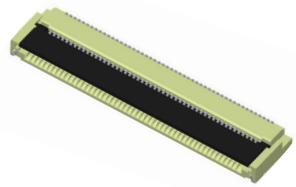

RoHS Compliant Pb HF

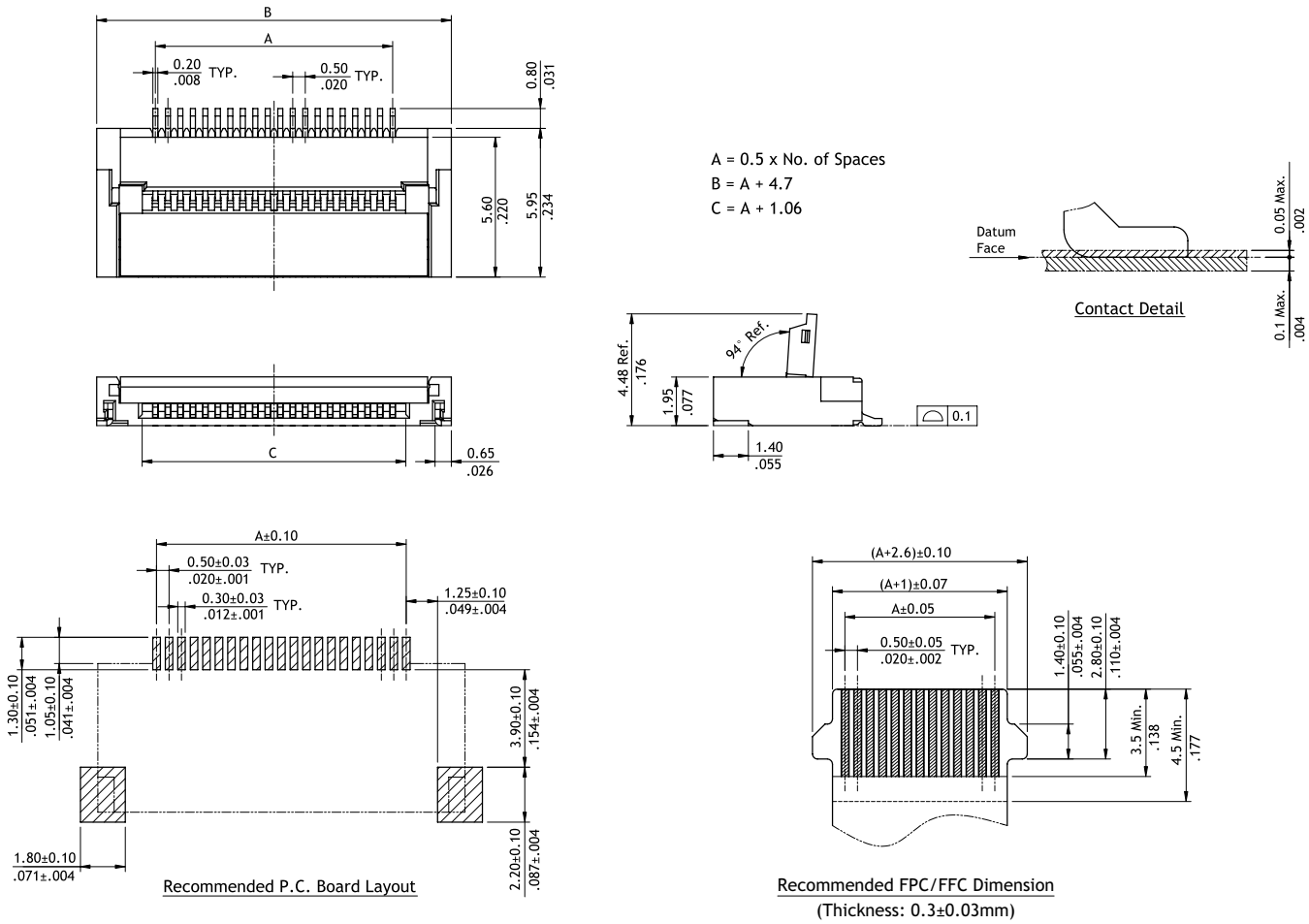

Ordering Code

❶ ❷ ❸ ❹ ❺ ❻ ❼ ❽ ❾

CF34 40 1 D 0 R 0 – 05 – NH

❶ Series No.
❷ No. of Circuits: 04 to 60
(Available: 09,18,54)
Circuits not found above please consult manufacturer
❸ Plating Code:
1 = Tin over Nickel
2 = Matte Gold flash over Nickel

❹ Contact Style:
D = Downside Contact
❺ Color: 0 = Nature
❻ Packing:
R = Tape & Reel

❼ Other Options:
0 = Without Mylar (Standard)
*Special options consult manufacturer
❽ Pitch: 05 = 0.50 mm
❾ -NH = For Lead Free IR process and Halogen-Free

CF25 Series 0.50mm(.020")H=2.20 SMT ZIF One-Touch FFC/FPC Connectors

◎ 2.2mm above the board
◎ FFC/FPC zero insertion force and high retention force
◎ Insulator: High temperature plastic UL 94V-0, Color Nature
◎ Cover: High temperature plastic UL 94V-0, Color Black
◎ Designed easy for FFC/FPC installation and reliable operation
◎ With metal fixed tabs to secure connector in place

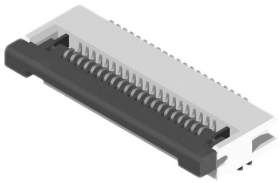

RoHS Compliant

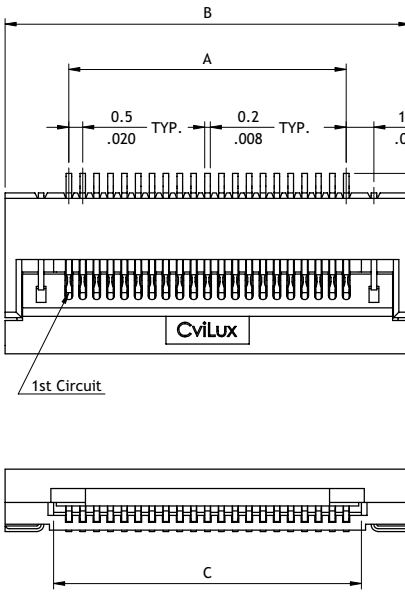

A = 0.5 x No. of Spaces
B = A + 4.6
C = A + 1.1

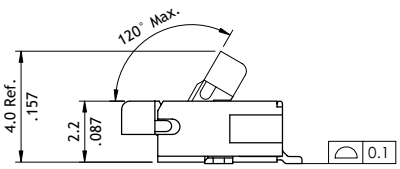

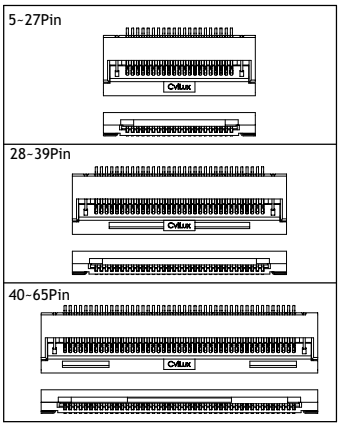

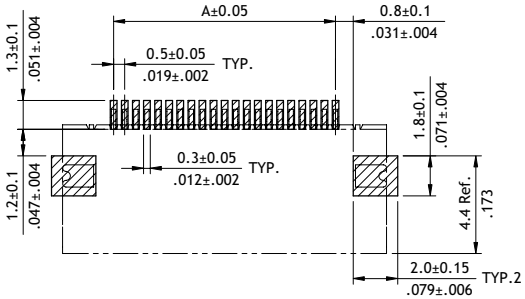

Recommended P.C. Board Layout

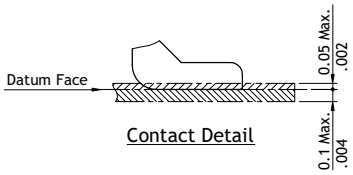

Contact Detail

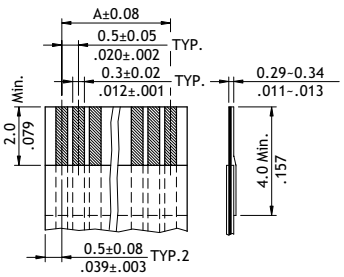

Accommodated FFC/FPC

Ordering Code

❶ ❷ ❸ ❹ ❺ ❻ ❼ ❽ ❾
CF25 65 1 D 0 R 0 – 05 – NH

❶ Series No.
❷ No. of Circuits: 05 to 65
Circuits not found above please consult manufacturer
❸ Plating Code:
1 = Matte Tin over Nickel
F = Selective Gold flash over Nickel
❹ Contact Style:
D = Downside contact
❺ Color: 0 = Nature
❻ Packing:
R = Tape & Reel
T = Tube
❼ Other Options:
0 = Standard
*Special option consult manufacturer
❽ Pitch: 05 = 0.50 mm
❾ -NH = For Lead Free IR process and Halogen-Free

CF25 Series 0.50mm(.020")H=2.20 SMT ZIF One-Touch FFC/FPC Connectors

◎ 2.2mm above the board
◎ FFC/FPC zero insertion force and high retention force
◎ Insulator: High temperature plastic UL 94V-0, Color Nature
◎ Cover: High temperature plastic UL 94V-0, Color Black
◎ Actuator designed easy for FFC/FPC installation and reliable operation
◎ With metal fixed tabs to secure connector in place

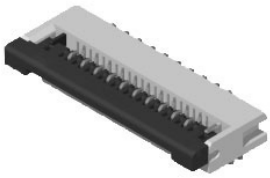

RoHS Compliant

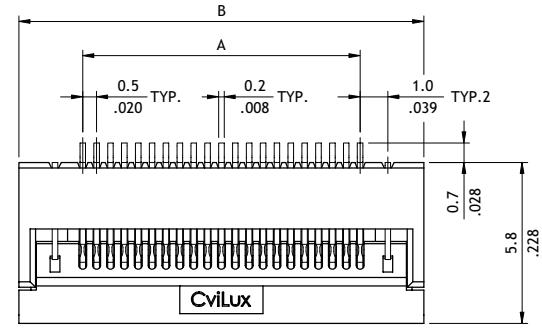

A = 0.5 x No. of Spaces
B = A + 4.6
C = A + 1.1
D = A + 1.0
E = A + 2.6
F = A + 2.1

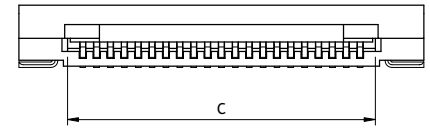

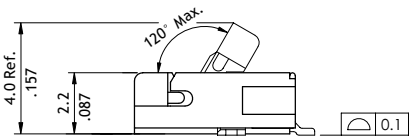

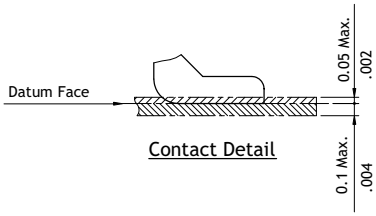

Contact Detail

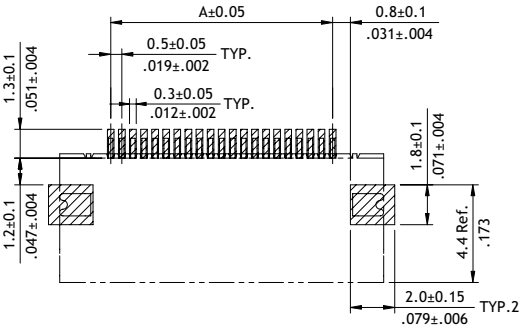

Recommended P.C. Board Layout

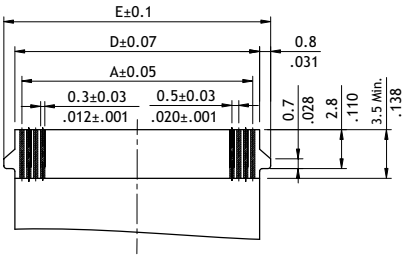

Accommodated FFC/FPC(TYPE1)

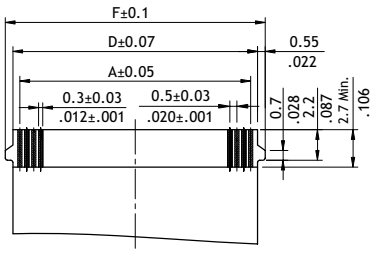

Accommodated FFC/FPC(TYPE2)

Ordering Code

❶ ❷ ❸ ❹ ❺ ❻ ❼ ❽ ❾
CF25 65 1 D 0 T E – 05 – NH

❶ Series No.
❷ Circuits: 05 to 65
Circuits not found above please consult manufacturer
❸ Plating Code:
1 = Matte Tin over Nickel

❹ Contact Style:
D = Downside contact
❺ Color: 0 = Nature
❻ Packing Options:
R = Tape & Reel
T = Tube

❼ Other Options:
D: Accommodated FFC/FPC (Type 1)
E: Accommodated FFC/FPC (Type 2)
❽ Pitch: 05 = 0.50 mm
❾ -NH = For Lead Free IR process and Halogen-Free

CF25 Series 0.50mm(.020")H=2.40 DIP ZIF One-Touch FFC/FPC Connectors

◎ 2.4mm above the board
◎ FFC/FPC zero insertion force and high holding force
◎ Insulation: High temperature plastic UL 94V-0, Color Nature
◎ Cover: High temperature plastic UL 94V-0, Color Black
◎ With metal Pegs

RoHS Compliant Pb HF

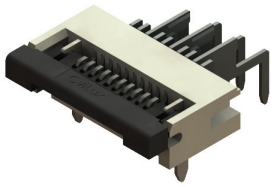

3D

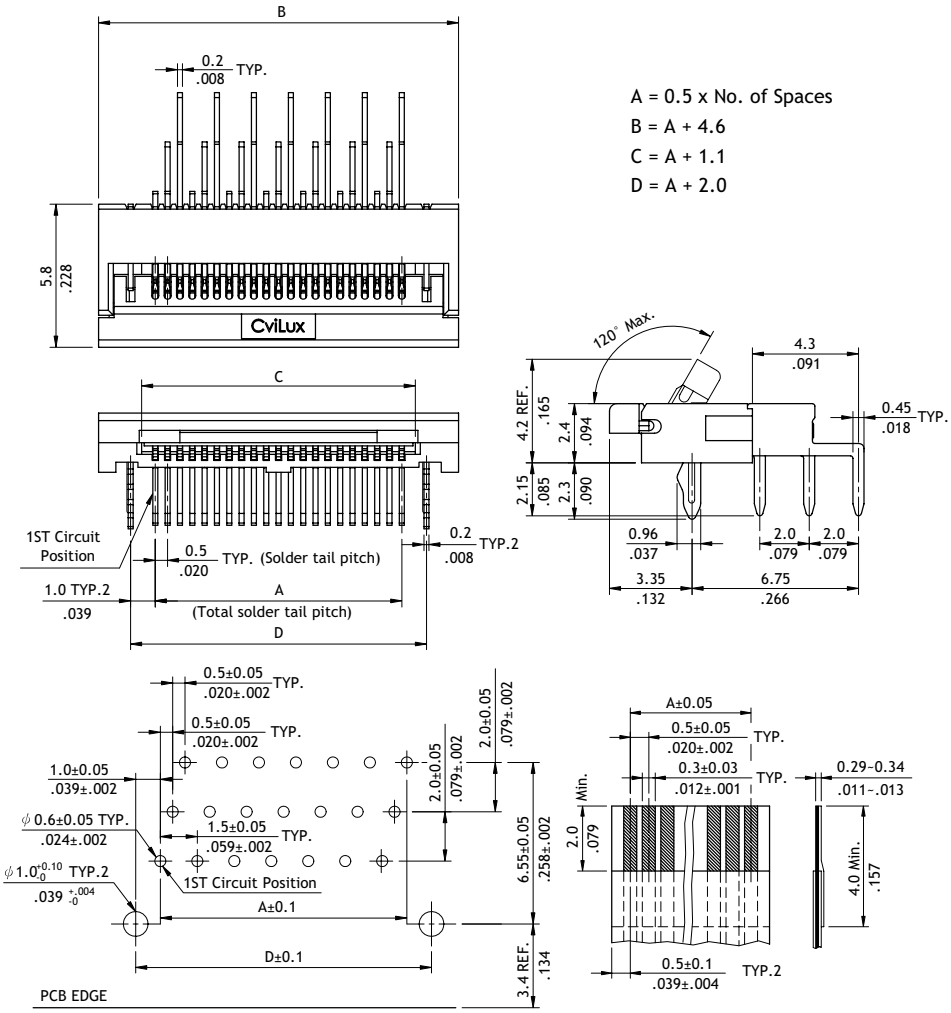

A = 0.5 x No. of Spaces
B = A + 4.6
C = A + 1.1
D = A + 2.0

Recommended P.C. Board Layout

Accommodated FFC/FPC

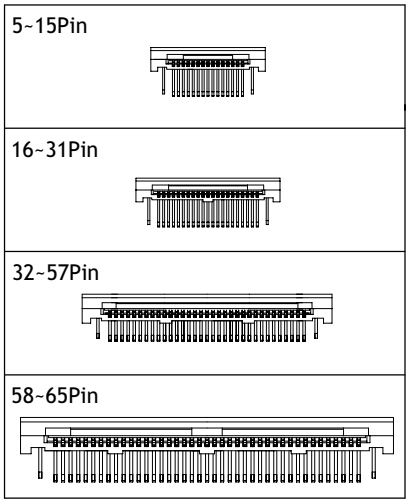

Ordering Code

❶ ❷ ❸ ❹ ❺ ❻ ❼ ❽ ❾
CF25 65 2 H 0 T T – 05 – NH

❶ Series No.
❷ No. of Circuits: 05 to 65
Circuits not found above please consult manufacturer
❸ Plating Code:
1 = Tin over Nickel
2 = Gold flash over Nickel
❹ Contact Style:
H = Side Entry DIP Type (Downside Contact)
❺ Color: 0 = Nature
❻ Packing Options:
T = Tube
❼ Other Options:
T = Triple Rows
❽ Pitch: 05 = 0.50 mm
❾ -NH = For Lead Free IR process and Halogen-Free

CF25 Series 1.00mm(.039")H=2.20 SMT ZIF One-Touch FFC/FPC Connectors

◎ 2.2mm above the board
◎ FFC/FPC zero insertion force and high holding force
◎ Insulator: High temperature plastic UL 94V-0, Color Nature
◎ Cover: High temperature plastic UL 94V-0, Color Black
◎ Actuator designed easy for FFC/FPC installation and reliable operation
◎ With metal fixed tabs to secure connector in place

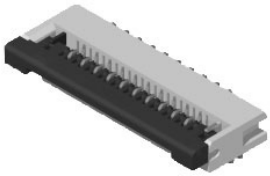

RoHS Compliant

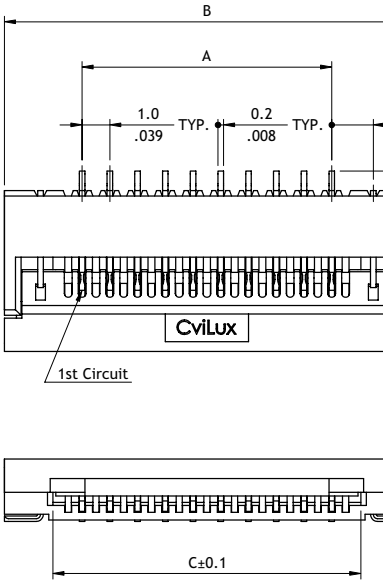

A = 1.0 x No. of Spaces
B = A + 5.6
C = A + 2.1

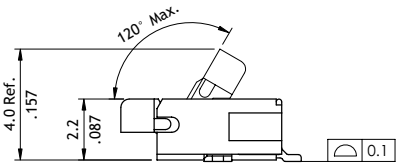

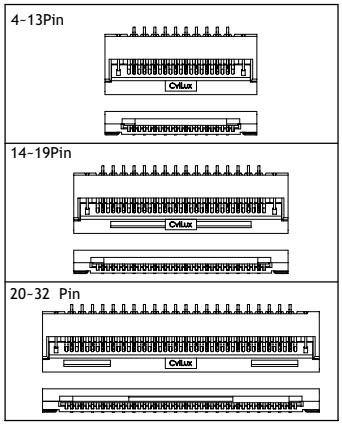

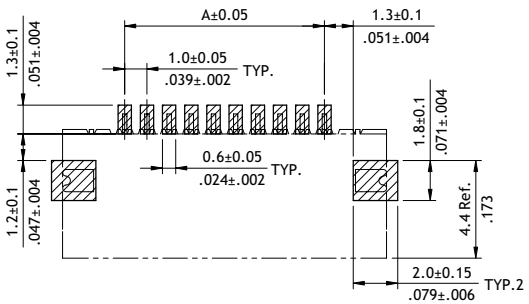

Recommended P.C. Board Layout

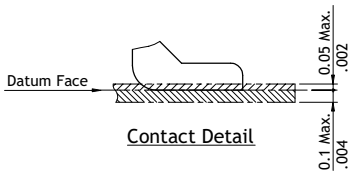

Contact Detail

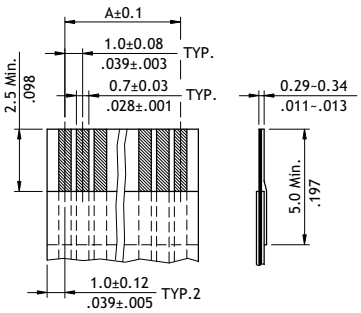

Accommodated FFC/FPC

Ordering Code

❶ ❷ ❸ ❹ ❺ ❻ ❼ ❽ ❾
CF25 32 1 D 0 R 0 – 10 – NH

❶ Series No.
❷ No. of Circuits: 04 to 32
Circuits not found above please consult manufacturer
❸ Plating Code:
1 = Matte Tin over Nickel
F = Selective Gold flash over Nickel
❹ Contact Style:
D = Downside Contact
❺ Color: 0 = Nature
❻ Packing:
R = Tape & Reel
T = Tube
❼ Other Options:
0 = Standard
*Special option consult manufacturer
❽ Pitch: 10 = 1.00 mm
❾ -NH = For Lead Free soldering process and Halogen-Free

CF25 Series 1.00mm(.039")H=2.20 SMT ZIF One-Touch FFC/FPC Connectors

- ◎ 2.2mm above the board
- ◎ FFC/FPC zero insertion force and high holding force
- ◎ Insulation: High temperature plastic UL 94V-0, Color Nature
- ◎ Cover: High temperature plastic UL 94V-0, Color Black
- ◎ Actuator designed easy for FFC/FPC installation and reliable operation
- ◎ With metal fixed tabs to secure connector in place

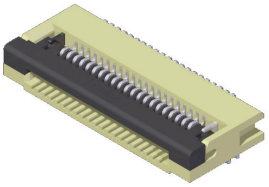

RoHS Compliant

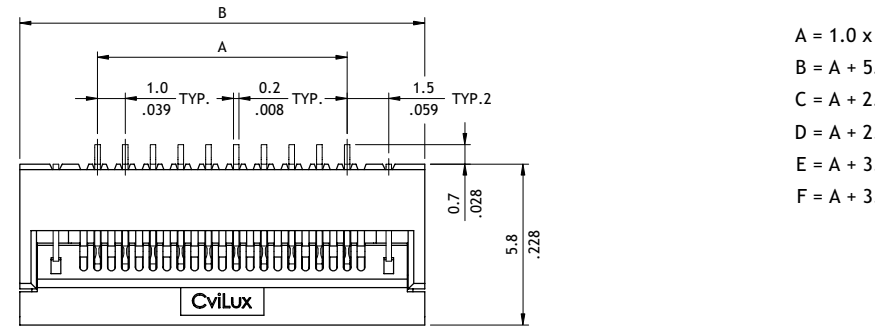

A = 1.0 x No. of Spaces
B = A + 5.6
C = A + 2.1
D = A + 2.0
E = A + 3.6
F = A + 3.1

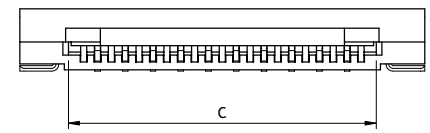

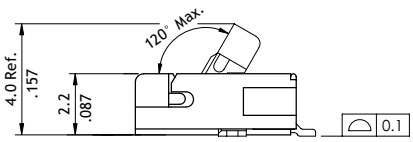

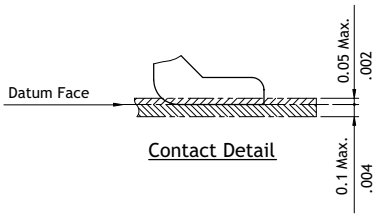

Contact Detail

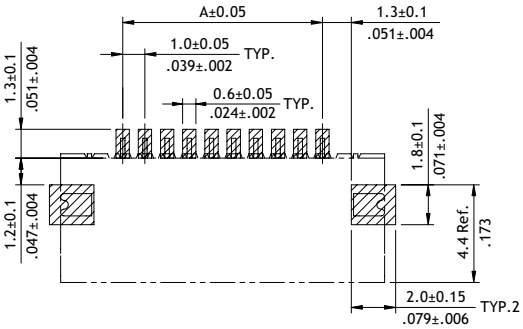

Recommended P.C. Board Layout

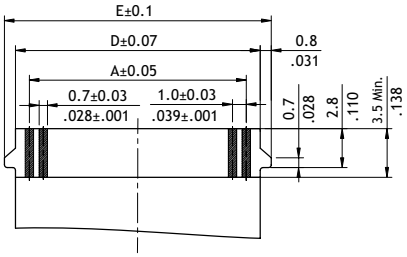

Accommodated FFC/FPC(TYPE1)

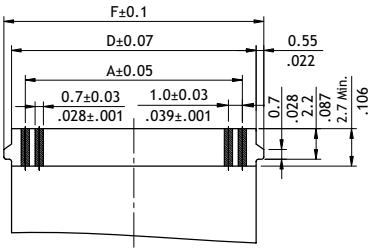

Accommodated FFC/FPC(TYPE2)

Ordering Code

❶ ❷ ❸ ❹ ❺ ❻ ❼ ❽ ❾

CF25 32 1 D 0 T E – 10 – NH

❶ Series No.
❷ No. of Circuits: 04 to 32
Circuits not found above please consult manufacturer
❸ Plating Code:
1 = Matte Tin over Nickel

❹ Contact Style:
D = Downside Contact
❺ Color: 0 = Nature
❻ Packing Options:
R = Tape & Reel
T = Tube

❼ Other Options:
D: Accommodated FFC/FPC (Type 1)
E: Accommodated FFC/FPC (Type 2)
❽ Pitch: 10 = 1.00 mm
❾ -NH = For Lead Free IR process and Halogen-Free

CF25 Series 1.00mm(.039")H=2.40 DIP ZIF One-Touch FFC/FPC Connectors

◎ 2.4mm above the board
◎ FFC/FPC zero insertion force and high retention force
◎ Insulator: High temperature plastic UL 94V-0, Color Nature
◎ Cover: High temperature plastic UL 94V-0, Color Black
◎ With metal Pegs

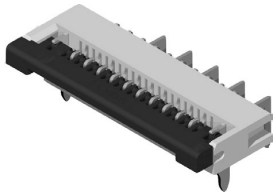

RoHS Compliant

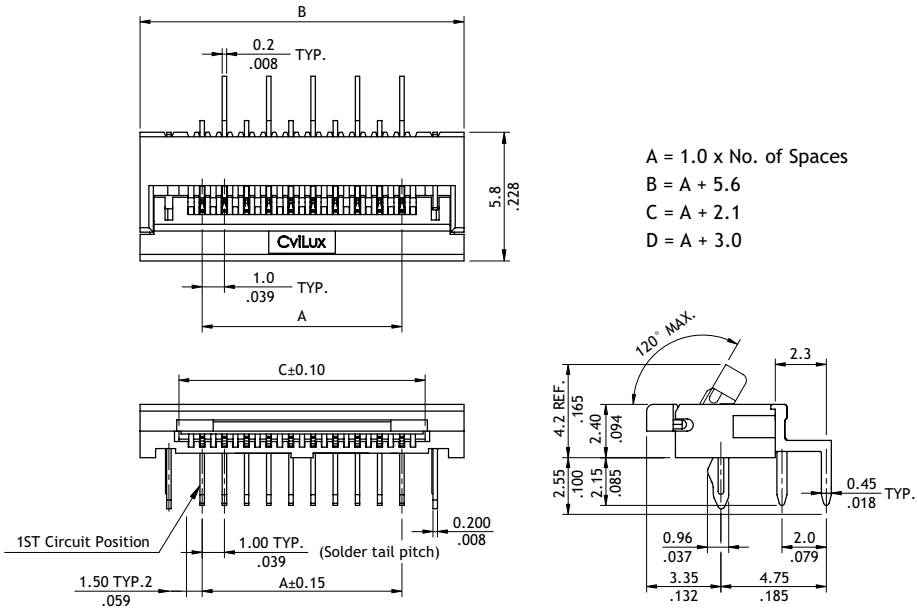

A = 1.0 x No. of Spaces
B = A + 5.6
C = A + 2.1
D = A + 3.0

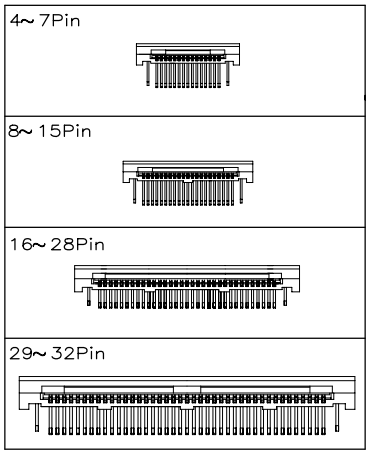

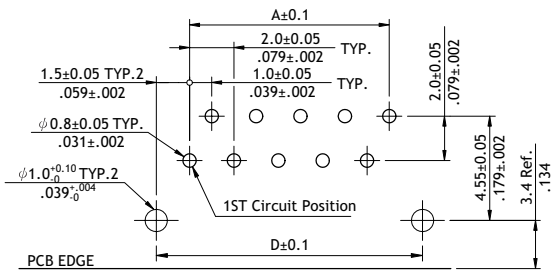

Recommended P.C. Board Layout

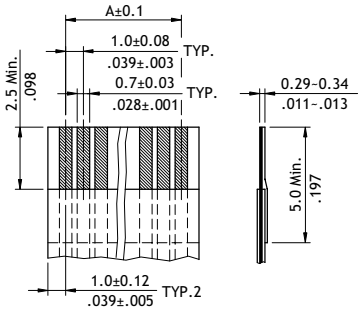

Accommodated FFC/FPC

Ordering Code

❶ ❷ ❸ ❹ ❺ ❻ ❼ ❽ ❾
CF25 32 1 H 0 T 0 – 10 – NH

❶ Series No.
❷ No. of Circuits: 04 to 32
Circuits not found above please consult manufacturer
❸ Plating Code:
1 = Matte Tin over Nickel
2 = Gold flash over Nickel

❹ Contact Style:
H = Right Angle DIP Type (Downside Contact)
❺ Color: 0 = Nature
❻ Packing:
T = Tube

❼ Other Options: 0 = Standard
*Special option consult manufacturer
❽ Pitch: 10 = 1.00 mm
❾ -NH = For Lead Free soldering process and Halogen-Free
*Empty code 9, if requesting non Halogen-Free material

CF11 Series 0.50mm(.039")H=2.70 SMT ZIF FFC/FPC Connectors (Back Flip)

◎ 2.7mm above the board
◎ Copper alloy dual contacts
◎ Insulator: High temperature plastic UL 94V-0, Color Black
◎ Cover: High temperature plastic UL 94V-0, Color Black
◎ With metal fixed tabs to secure connector in place

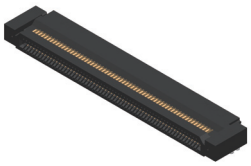

RoHS Compliant Pb HF

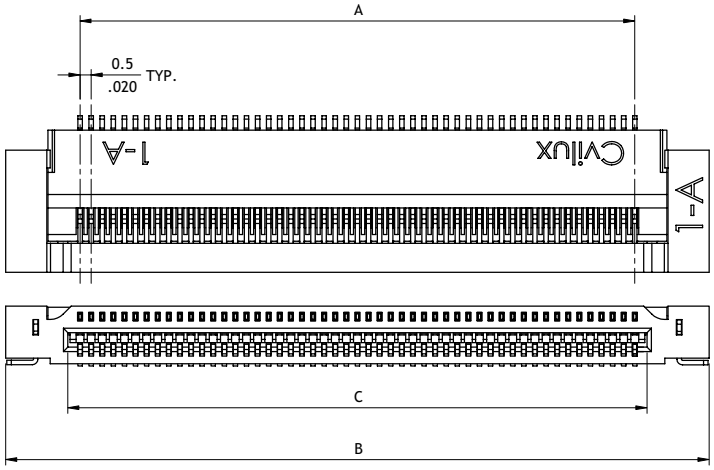

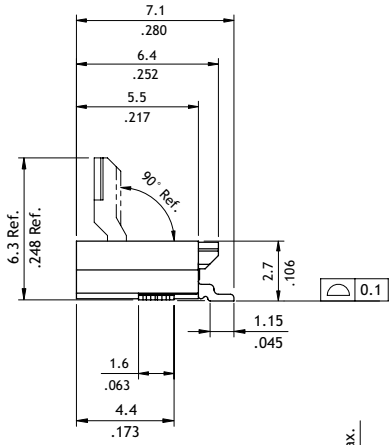

A = 0.50 * No. of Spaces
B = A + 6.7
C = A + 1.1

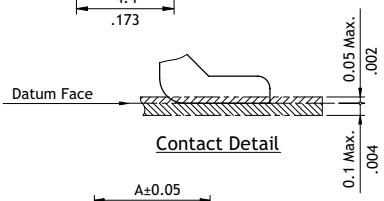

Contact Detail

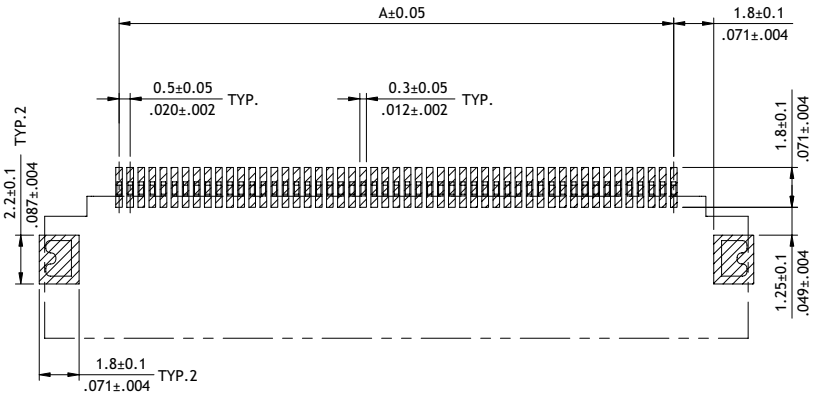

Recommended P.C. Board Layout

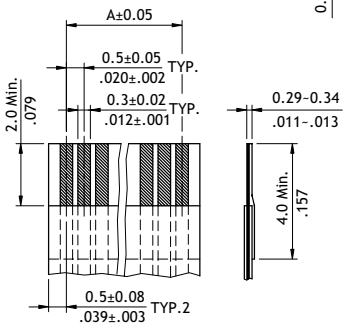

Accommodated FFC/FPC

Ordering Code

❶ ❷ ❸ ❹ ❺ ❻ ❼ ❽ ❾
CF11 51 2 D 1 R A – 05 – NH

❶ Series No.
❷ No. of Circuits: 04 to 60
(Available: 4,20,26,41,45, 50,51,61)
Circuits not found above please consult manufacturer

❸ Plating Code:
2 = Gold flash over Nickel
❹ Contact Style:
D = Downside Contact
❺ Color: 1 = Black

❻ Packing: R = Tape & Reel
T = Tube
❼ Other Options: A = Standard
❽ Pitch: 05 = 0.50 mm
❾ -NH = For Lead Free IR process and Halogen-Free

CF11 Series 1.00mm(.039")H=2.70 SMT ZIF FFC/FPC Connectors (Back Flip)

◎ 2.7mm above the board
◎ Copper alloy dual contacts
◎ Insulator: High temperature plastic UL 94V-0, Color Nature
◎ Cover: High temperature plastic UL 94V-0, Color Black
◎ With metal fixed tabs to secure connector in place

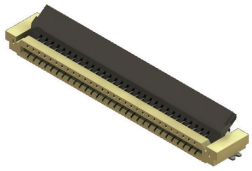

RoHS Compliant Pb HF

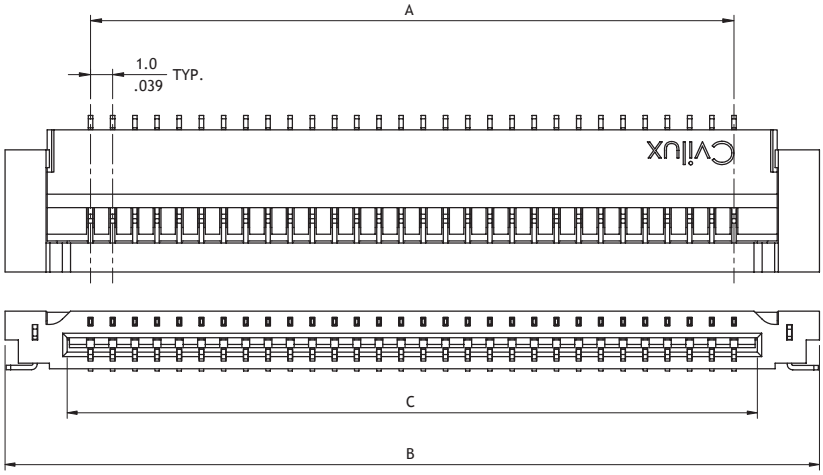

A = 1.00 * No. of Spaces
B = A + 7.7
C = A + 2.1

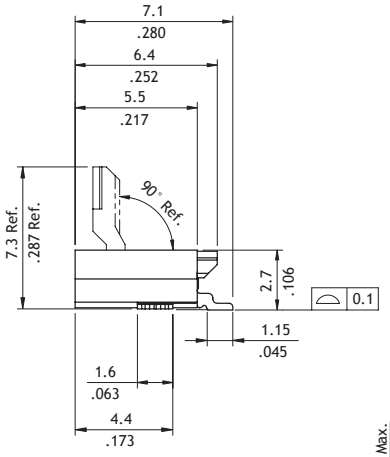

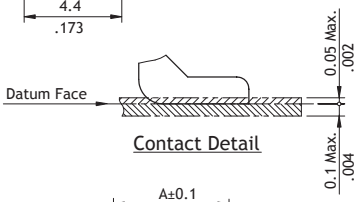

Contact Detail

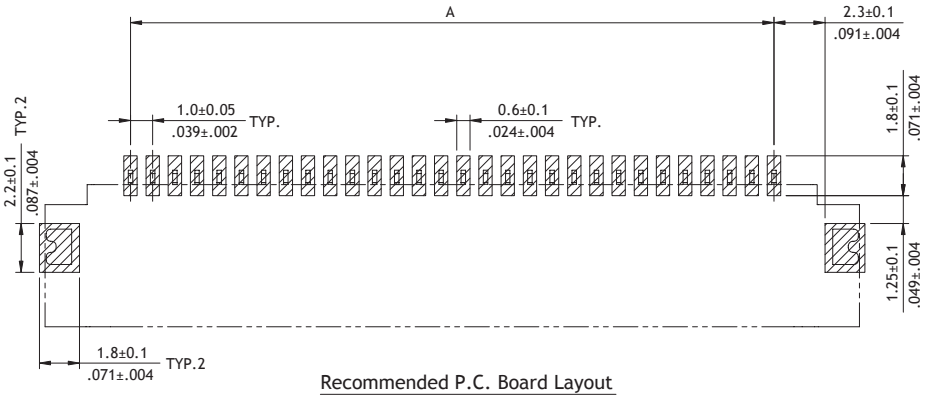

Recommended P.C. Board Layout

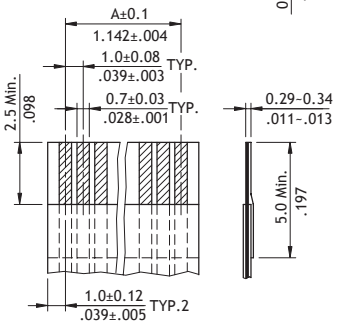

Accommodated FFC/FPC

Ordering Code

❶ ❷ ❸ ❹ ❺ ❻ ❼ ❽ ❾

CF11 30 2 D 0 R A – 10 – NH

❶ Series No.
❷ Circuits: 04 to 30
(Available: 8,30)
Circuits not found above please consult manufacturer

❸ Plating Code:
2 = Gold flash over Nickel
❹ Contact Style:
D = Downside Contact
❺ Color: 0 = Nature

❻ Packing: R = Tape & Reel
T = Tube
❼ Other Options: A = Standard
❽ Pitch: 10 = 1.00 mm
❾ -NH = For Lead Free IR process and Halogen-Free

CF23 Series 0.50mm(.020") H=1.20 SMT ZIF FFC/FPC Connectors

◎ 1.2mm above the board
◎ Insulator: High temperature plastic UL 94V-0, Color Nature
◎ Slider: High temperature plastic UL 94V-0, Color Black
◎ Fully checked by CCD and Hi-Pot test
◎ With metal fixed tabs to secure connector in place

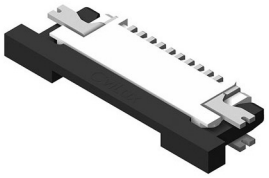

RoHS Compliant

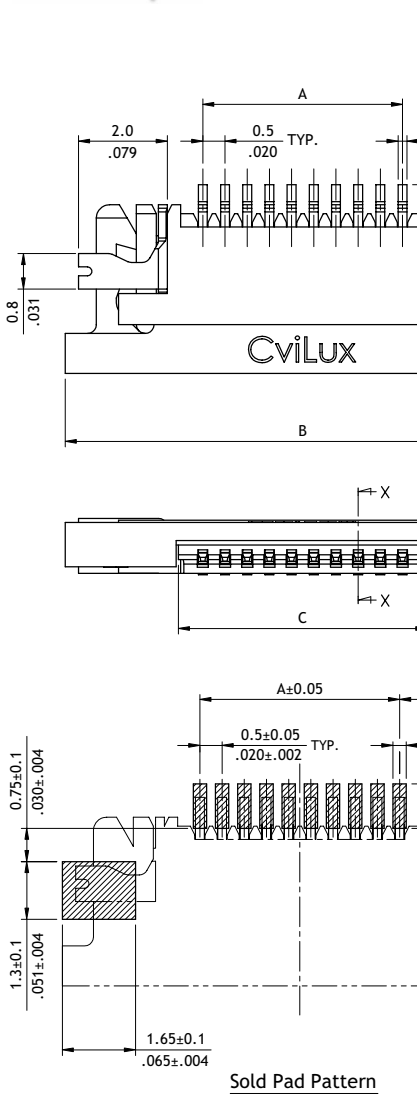

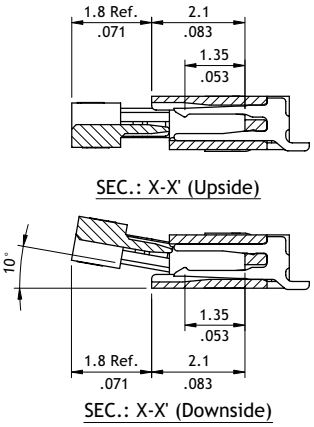

A = 0.5 * No. of Spaces
B = A + 6.2
C = A + 1.1

P/N	CF23**1U0*0-NH

(Upside)

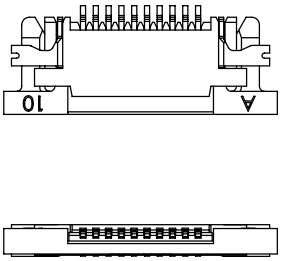

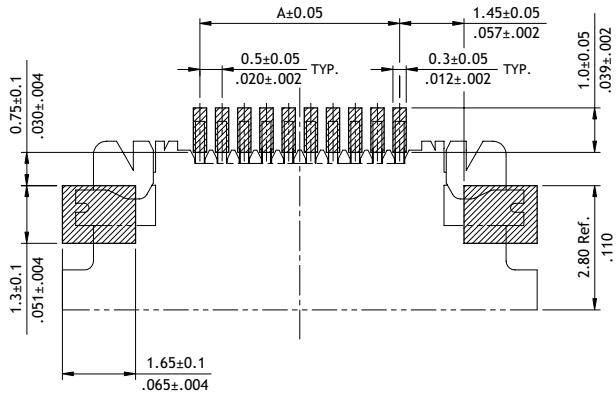

Sold Pad Pattern

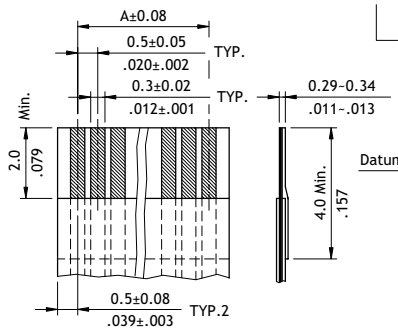

Accommodated FFC/FPC

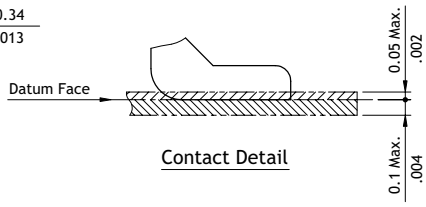

Contact Detail

Ordering Code

❶	❷	❸	❹	❺	❻	❼		❽
CF23	40	1	U	0	R	0	–	NH

❶ Series No.
❷ No. of Circuits: 05 to 40
(Available: 05,07,08,09,10,12, 13,14,15,16,17,18,20,21,22,24, 25,26,28,30,32,33,40)
Circuits not found above please consult manufacturer

❸ Plating Code:
1 = Matte Tin over Nickel
❹ Contact Style:
U = Upside Contact
D = Downside Contact
❺ Color: 0 = Nature

❻ Packing: R = Tape & Reel
T = Tube
❼ Other Options: 0 = Standard
* Special options consult manufacturer
❽ -NH = For Lead Free soldering process and Halogen-Free

CF23 Series 1.00mm(.039") H=1.20 SMT ZIF FFC/FPC Connectors

- ◎ 1.2mm above the board
- ◎ Insulator: High temperature plastic UL 94V-0, Color Nature
- ◎ Slider: High temperature plastic UL 94V-0, Color Black
- ◎ Fully checked by CCD and Hi-Pot test
- ◎ With metal fixed tabs to secure connector in place

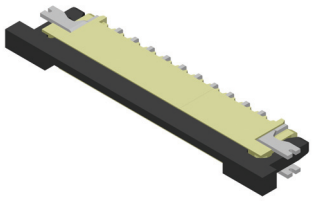

RoHS Compliant Pb HF

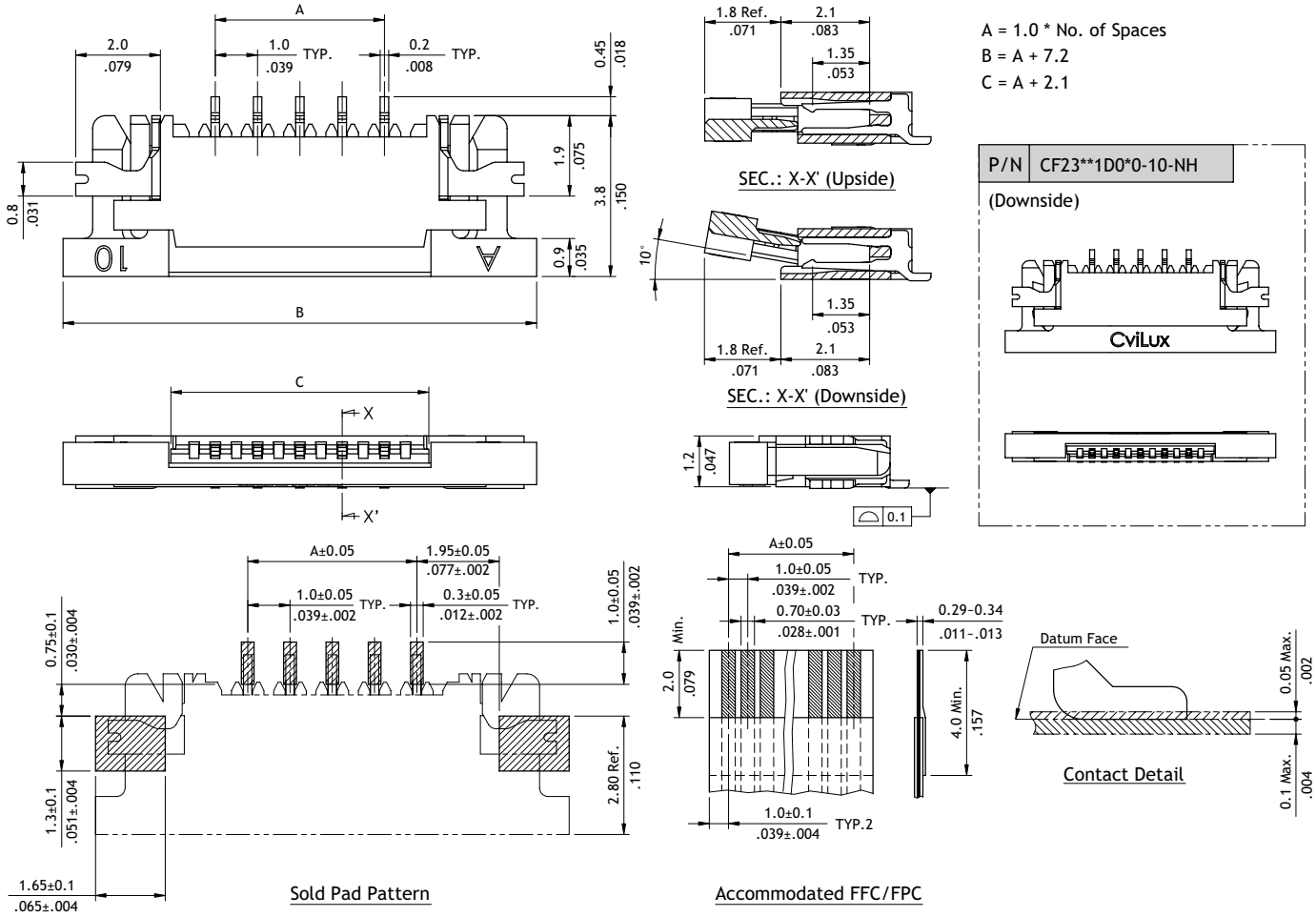

Ordering Code

❶ ❷ ❸ ❹ ❺ ❻ ❼ ❽ ❾

CF23 16 1 U 0 R 0 – 10 – NH

❶ Series No.

❷ No. of Circuits: 03 to 19
(Available: 3,4,6,7,8,10,12,16)
Circuits not found above please consult manufacturer

❸ Plating Code:
1 = Matte Tin over Nickel

❹ Contact Style:
U = Upside Contact
D = Downside Contact

❺ Color: 0 = Nature

❻ Packing:
R = Tape & Reel
T = Tube

❼ Other Options:
0 = Standard
* Special options consult manufacturer

❽ Pitch: 10 = 1.00 mm

❾ Process:
-NH = For Lead Free soldering process and Halogen-Free

CF46 Series 0.50mm(.020") H=1.95 SMT ZIF FFC/FPC Connectors

◎ Insulator: High temperature plastic UL 94V-0, Color Nature
◎ Cover: High temperature plastic UL 94V-0, Color Black
◎ With metal fixed tabs to secure connector in place

RoHS Compliant Pb HF

NEW

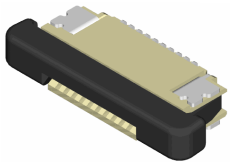

3D

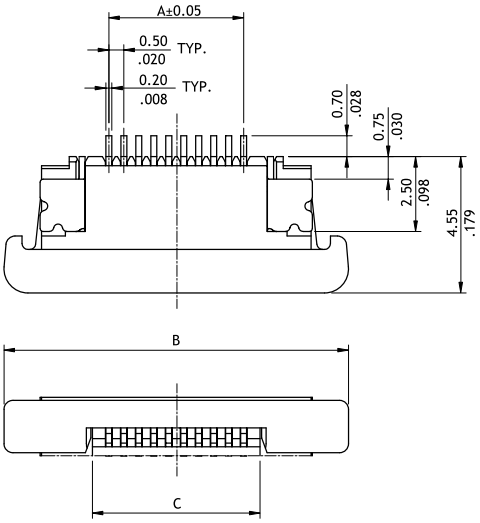

A = 0.5 x No. of Spaces
B = A + 7.0
C = A + 1.1

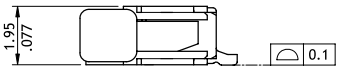

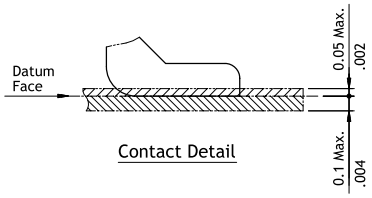

Contact Detail

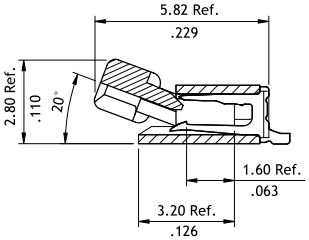

Cover open state

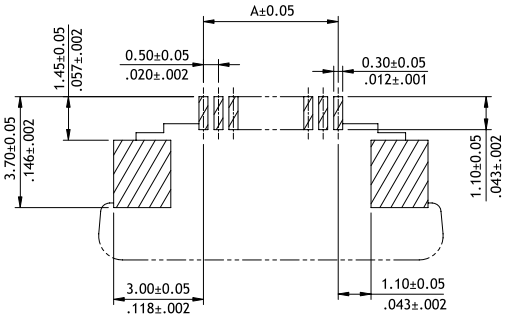

Recommended P.C. Board Layout

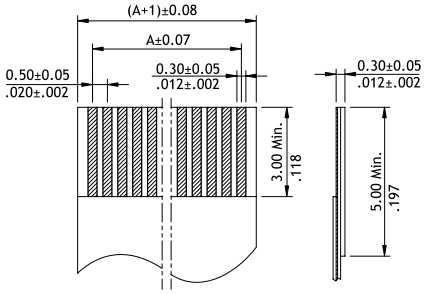

Accommodated FFC/FPC

Ordering Code

❶	❷	❸	❹	❺	❻	❼		❽
CF46	50	1	D	0	R	0	–	NH

❶ Series No.
❷ No. of Circuits: 04 to 60
(Available: 50)
Circuits not found above please consult manufacturer

❸ Plating Code:
1 = Matte Tin over Nickel
❹ Contact Style:
D = Downside Contact
❺ Color: 0 = Nature

❻ Packing:
R = Tape & Reel
❼ Other Options:
0 = Standard
❽ -NH = For Lead Free IR process and Halogen-Free

CF20 Series 0.50mm(.020") H=2.00 SMT ZIF FFC/FPC Connectors

◎ Insulator: High temperature plastic UL 94V-0, Color Nature
◎ Slider: High temperature plastic UL 94V-0, Color Black
◎ With metal fixed tabs to secure connector in place

RoHS Compliant Pb HF

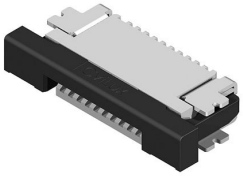
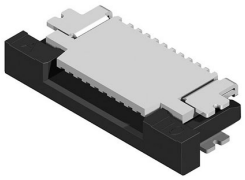

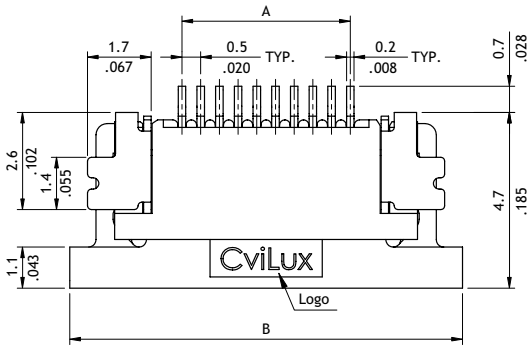

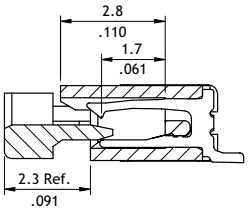

SEC.: X-X' (Upside)

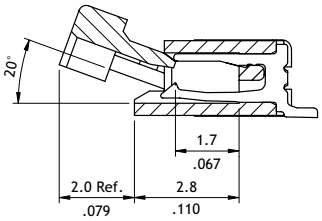

SEC.: X-X' (Downside)

A = 0.5 * No. of Spaces
B = A + 6.0
C = A + 1.1

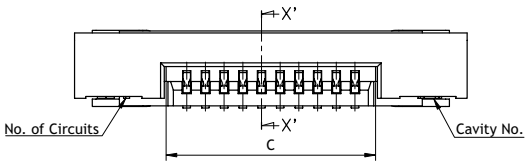

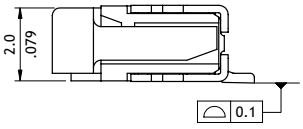

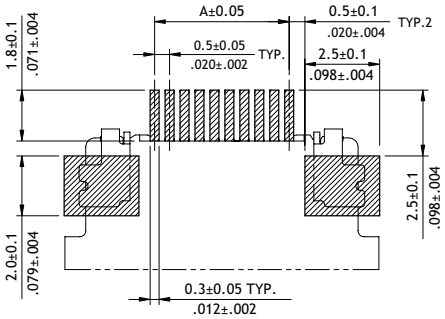

Solder Pad Pattern

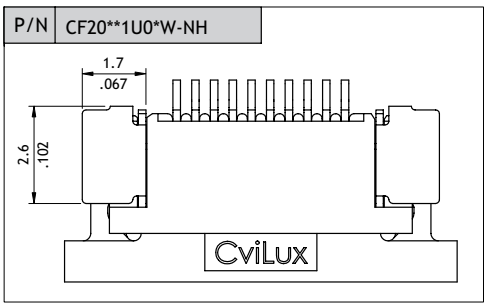

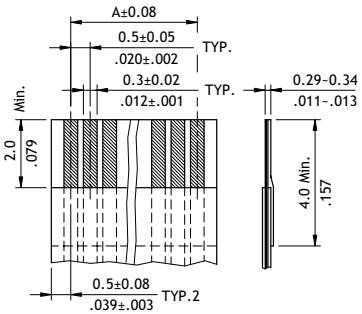

Accommodated FFC/FPC

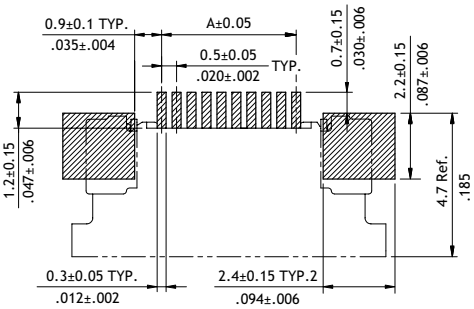

Sold Pad Pattern

Ordering Code

❶	❷	❸	❹	❺	❻	❼		❽
CF20	55	1	D	0	R	0	–	NH

❶ Series No.
❷ No. of Circuits: 04 to 55
❸ Plating Code:
1 = Matte Tin over Nickel

❹ Contact Style:
U = Upside Contact
D = Downside Contact
❺ Color: 0 = Nature
❻ Packing:
R = Tape & Reel
T = Tube

❼ Other Options:
0 = Standard
W = Wide tabs
* Special options consult manufacturer
❽ -LF = For Lead Free soldering process
-NH = For Lead Free soldering process and Halogen-Free

CF20 Series 0.50mm(.020") H=3.90 SMT ZIF Vertical FFC/FPC Connectors

◎ Insulator: High temperature plastic UL 94V-0, Color Nature
◎ Slider: High temperature plastic UL 94V-0, Color Black
◎ With metal fixed tabs to secure connector in place

RoHS Compliant Pb HF

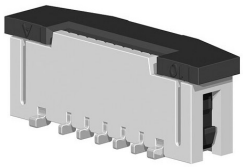

A = 0.5 x No. of Spaces
B = A + 5.5
C = A + 1.2
D = A + 6.8

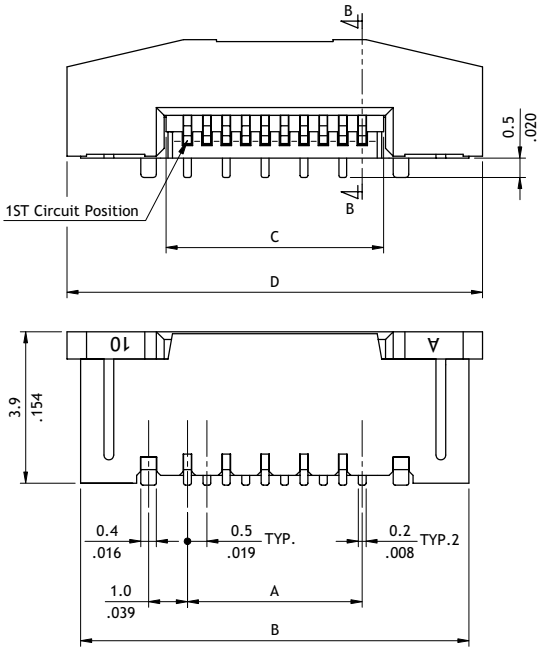

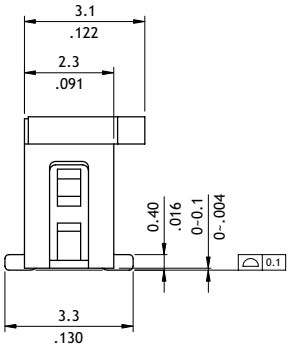

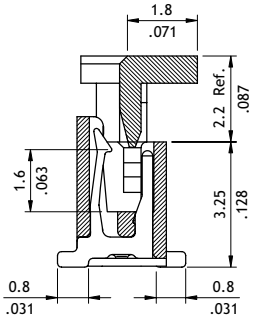

B-B SEC.

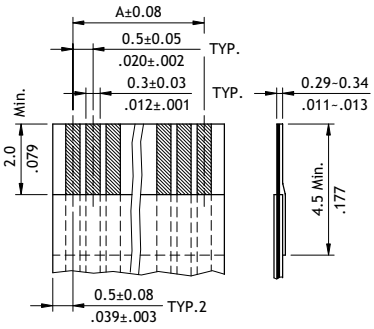

Accommodated FFC/FPC

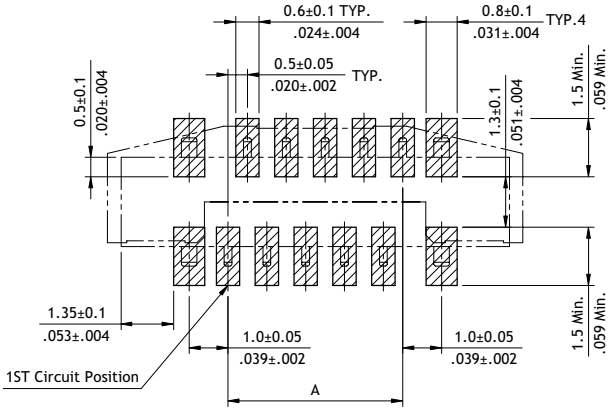

Ordering Code

❶	❷	❸	❹	❺	❻	❼		❽
CF20	55	1	V	0	R	0	–	NH

❶ Series No.
❷ No. of Circuits: 04 to 55
❸ Plating Code:
1 = Matte Tin over Nickel

❹ Contact Style:
V = Vertical Type
❺ Color: 0 = Nature
❻ Packing:
R = Tape & Reel
T = Tube

❼ Other Options:
0 = Standard
* Special options consult manufacturer
❽ -LF = For Lead Free soldering process
-NH = For Lead Free soldering process and Halogen-Free

CF20 Series 1.00mm(.039") H=2.00 SMT ZIF FFC/FPC Connectors

◎ Insulator: High temperature plastic UL 94V-0, Color Nature
◎ Slider: High temperature plastic UL 94V-0, Color Black
◎ With metal fixed tabs to secure connector in place

RoHS Compliant Pb HF

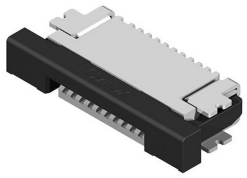
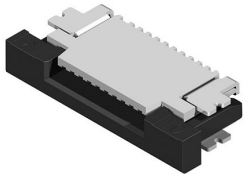

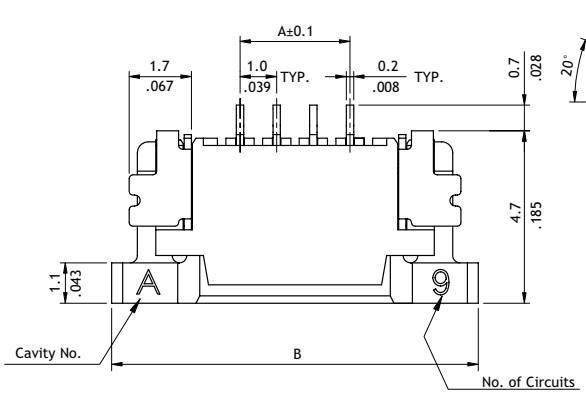

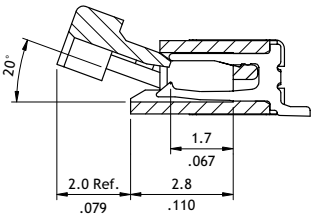

SEC.: X-X' (Downside)

A = 1.0 * No. of Spaces
B = A + 7.0
C = A + 2.1

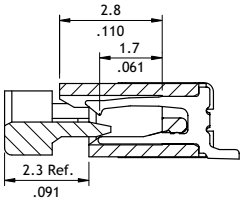

SEC.: X-X' (Upside)

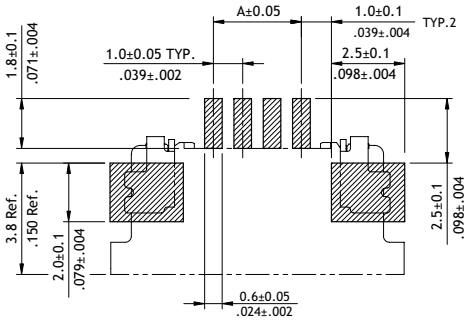

Solder Pad Pattern

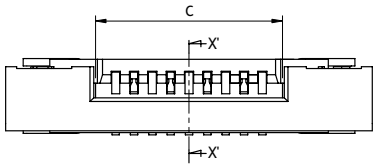

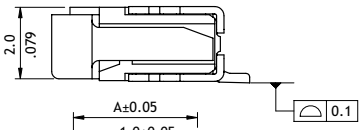

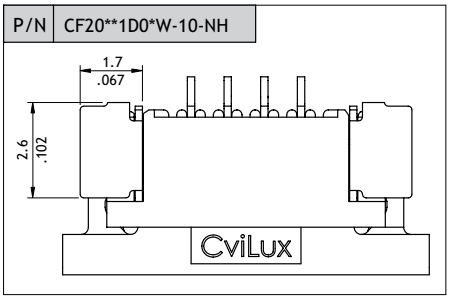

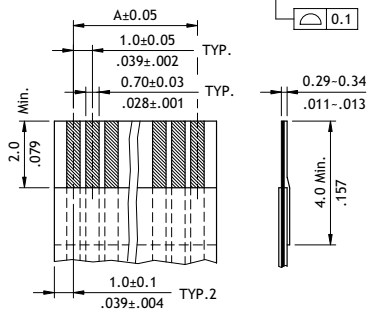

Accommodated FFC/FPC

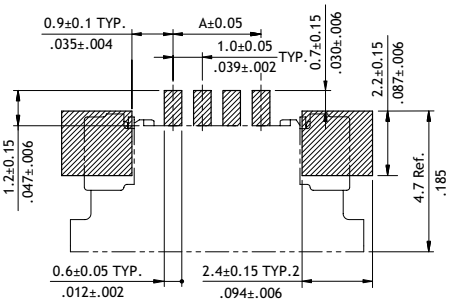

Sold Pad Pattern

Ordering Code

❶ ❷ ❸ ❹ ❺ ❻ ❼ ❽ ❾
CF20 27 1 U 0 R 0 – 10 – NH

❶ Series No.
❷ No. of Circuits: 02 to 27
❸ Plating Code:
1 = Matte Tin over Nickel
2 = Gold flash over Nickel

❹ Contact Style:
U = Upside Contact
D = Downside Contact
❺ Color: 0 = Nature
❻ Packing Options:
R = Tape & Reel
T = Tube

❼ Other Options: 0 = Standard
W = Wide Tabs
*Special options consult manufacturer
❽ Pitch: 10 = 1.00 mm
❾ -LF = For Lead Free soldering process
-NH = For Lead Free soldering process and Halogen-Free

CF27 Series 0.50mm(.020") H=1.20 SMT LIF FFC/FPC Connectors

◎ 1.2mm above the board
◎ Copper alloy dual contacts
◎ Insulator: High temperature plastic UL 94V-0, Color Nature
◎ With metal fixed tabs to secure connector in place

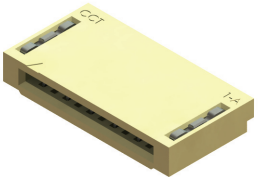

RoHS Compliant

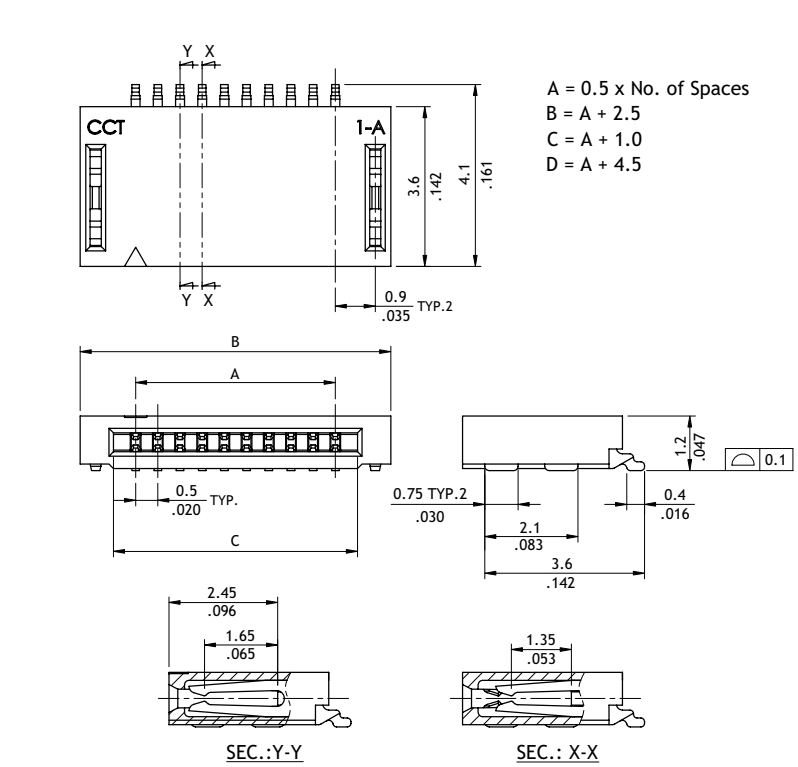

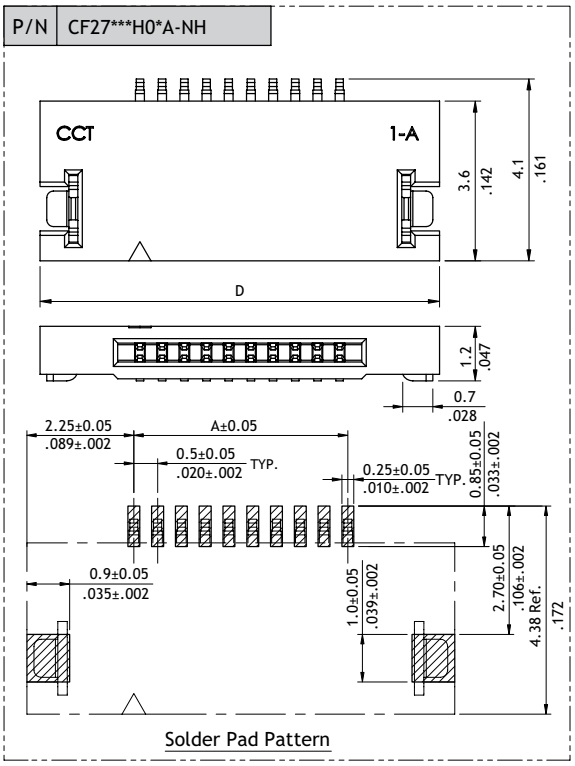

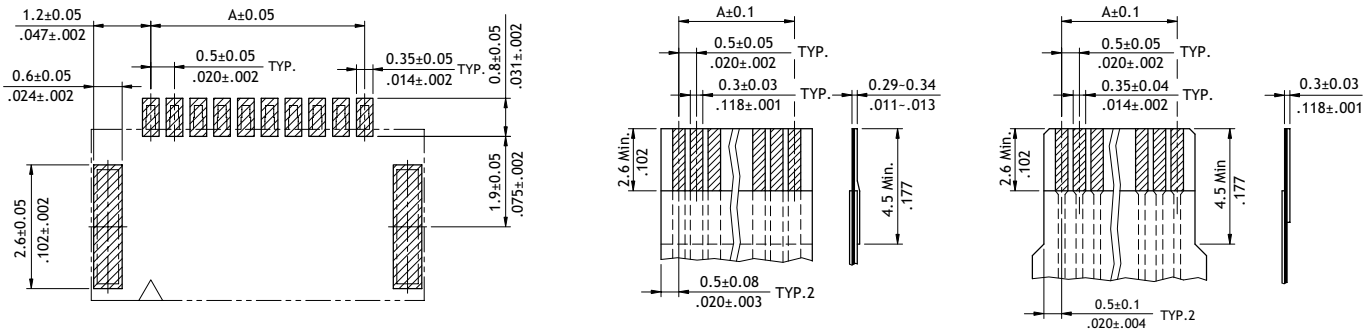

Ordering Code

❶	❷	❸	❹	❺	❻	❼		❽
CF27	20	1	H	0	R	0	–	NH

❶ Series No.
❷ No. of Circuits: 04 to 20
❸ Plating Code:
1 = Matte Tin over Nickel
2 = Gold flash over Nickel

❹ Contact Style:
H = Side Entry
❺ Color: 0 = Nature
❻ Packing:
R = Tape & Reel
T = Tube

❼ Other Options:
0 = Standard
A = Base of Wide size
❽ -NH = For Lead Free IR process and Halogen-Free

CF27 Series 1.00mm(.039") H=1.20 SMT LIF FFC/FPC Connectors

◎ 1.2mm above the board
◎ Copper alloy dual contacts
◎ Insulation: High temperature plastic UL 94V-0, Color Nature
◎ With metal fixed tabs to secure connector in place

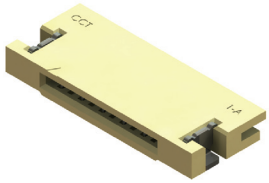

RoHS Compliant Pb HF

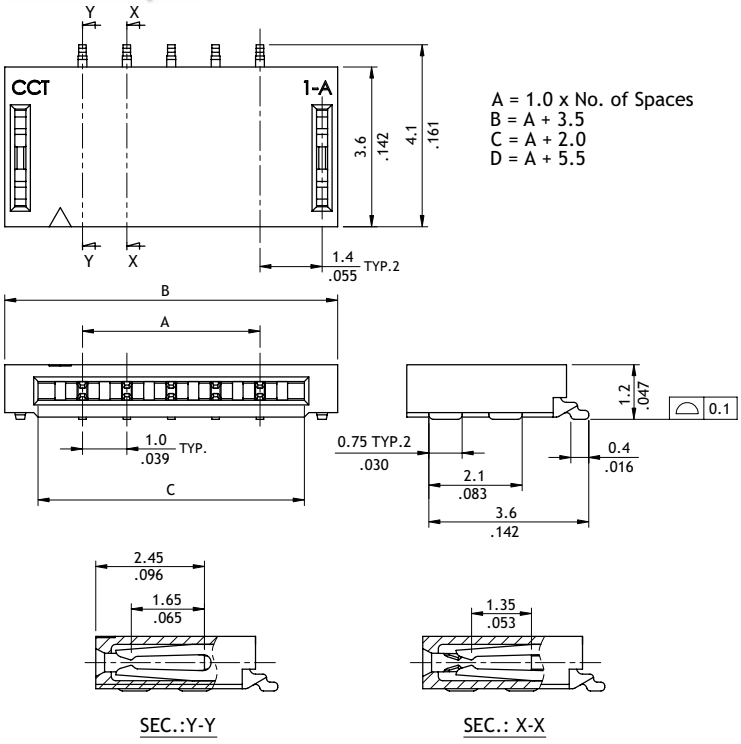

A = 1.0 x No. of Spaces
B = A + 3.5
C = A + 2.0
D = A + 5.5

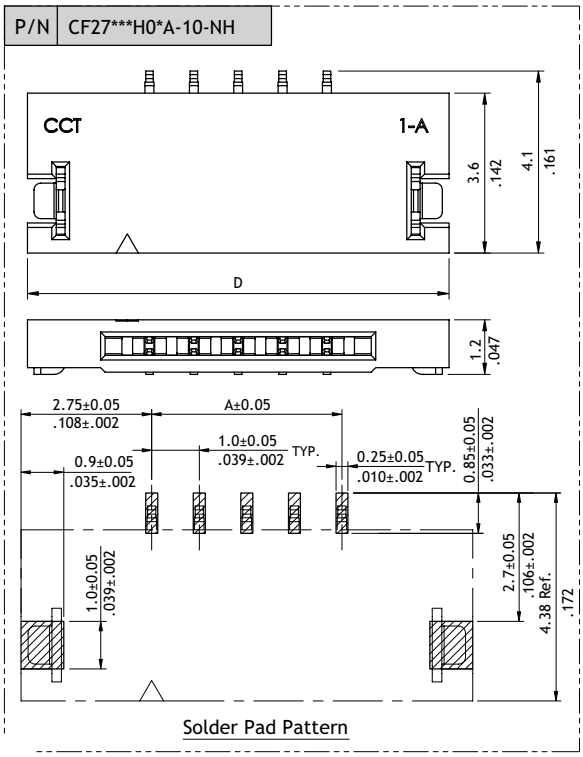

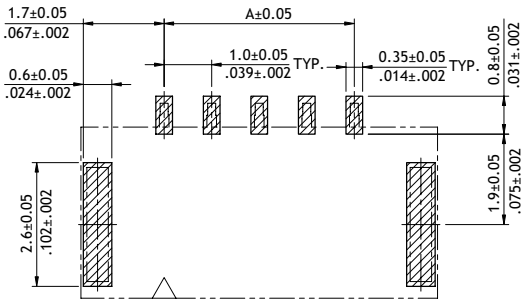

Solder Pad Pattern

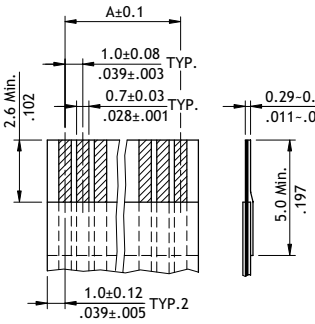

Accommodated FFC

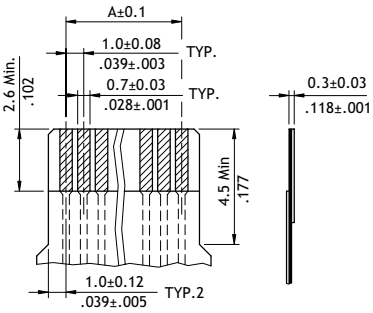

Accommodated FPC

Ordering Code

❶ ❷ ❸ ❹ ❺ ❻ ❼ ❽ ❾
CF27 10 1 H 0 R 0 – 10 – NH

❶ Series No.
❷ No. of Circuits: 04 to 10
❸ Plating Code:
1 = Matte Tin over Nickel
2= Gold flash over Nickel

❹ Contact Style:
H = Side Entry
❺ Color: 0 = Nature
❻ Packing Options:
R = Tape & Reel
T = Tube

❼ Other Options:
0 = Standard
A = Base of Wide size
❽ Pitch: 10 = 1.00 mm
❾ -NH = For Lead Free soldering process and Halogen-Free

CF24 Series 0.50mm(.020") H=4.20 SMT LIF Vertical FFC/FPC Connectors

◎ Tin plated over copper alloy dual contacts
◎ Insulator: High temperature plastic UL 94V-0, Color Nature
◎ Low insertion force

RoHS Compliant Pb HF

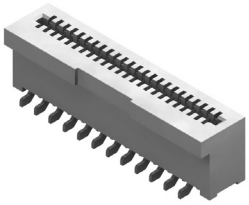

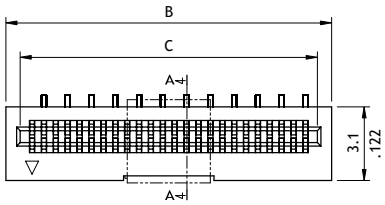

10-50PIN

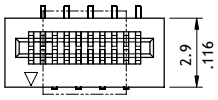

4-9PIN

A = 0.5 x No. of Spaces
B = A + 2.2
C = A + 1.1

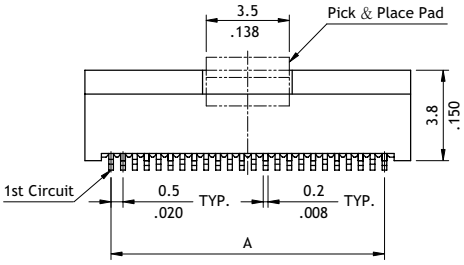

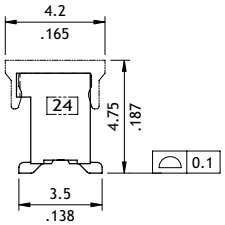

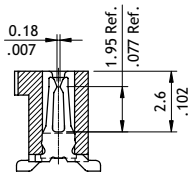

SEC. "A-A"

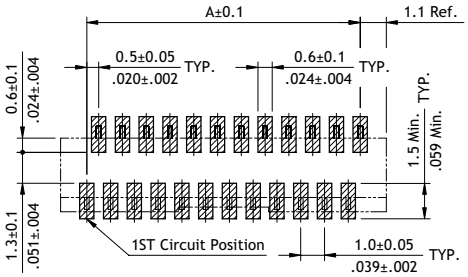

Solder Pad Pattern

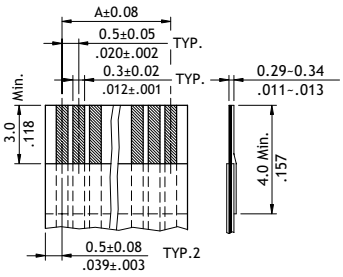

Accommodated FFC/FPC

Ordering Code

❶	❷	❸	❹	❺	❻	❼		❽
CF24	50	1	V	0	R	0	–	NH

❶ Series No.
❷ No. of Circuits: 04 to 50
❸ Plating Code:
1 = Matte Tin over Nickel

❹ Contact Style:
V = Vertical Type
❺ Color: 0 = Nature
❻ Packing:
R = Tape & Reel
T = Tube

❼ Other Options:
0 = With pick & place pad (Standard)
N = Without pick & place pad
*Special options consult manufacturer
❽ -NH = For Lead Free soldering process and Halogen-Free

CF32 Series 0.80mm(.031")H=1.95 SMT ZIF One-Touch FFC/FPC Connectors

- ◎ 1.95mm above the board
- ◎ FFC/FPC zero insertion force and high holding force
- ◎ Insulation: High temperature plastic UL 94V-0, Color Nature
- ◎ Cover: High temperature plastic UL 94V-0, Color Black
- ◎ Actuator designed easy for FFC/FPC installation and reliable operation
- ◎ With metal fixed tabs to secure connector in place

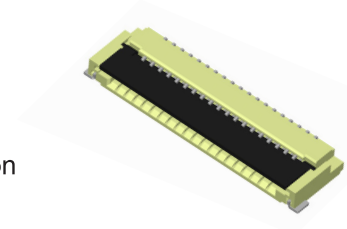

RoHS Compliant Pb HF

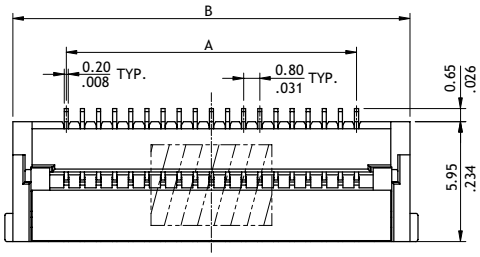

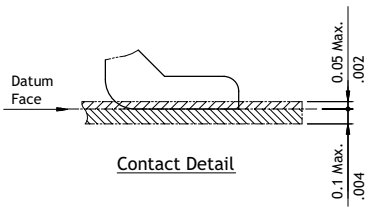

Contact Detail

A = 0.8 x No. of Spaces
B = A + 5.3
C = A + 1.45

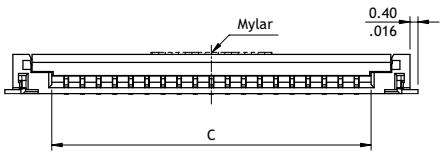

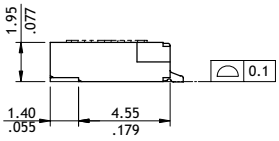

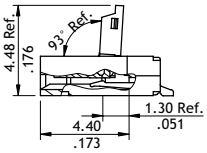

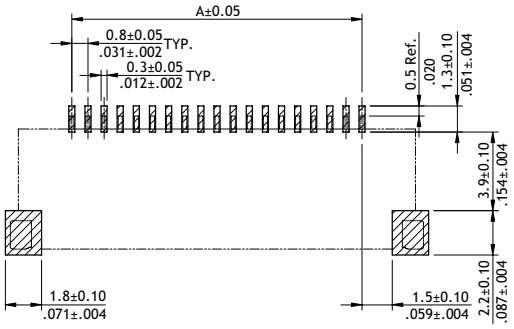

Recommended P.C. Board Layout

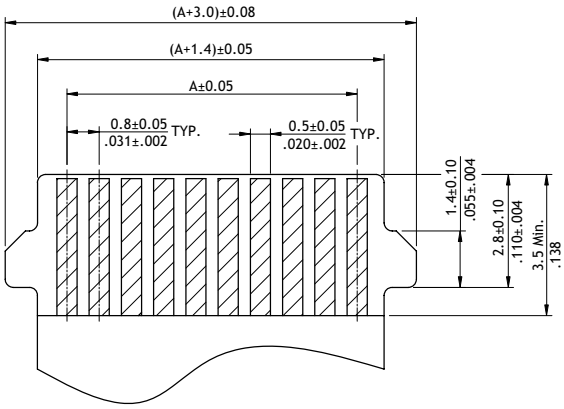

Recommended FPC/FFC Dimension
(Thickness: 0.3±0.03mm)

Ordering Code

❶	❷	❸	❹	❺	❻	❼		❽
CF32	30	1	D	0	R	0	–	NH

❶ Series No.
❷ No. of Circuits: 04 to 30
(Available: 10,27,30)
Circuits not found above please consult manufacturer

❸ Plating Code:
1 = Matte Tin over Nickel
2 = Gold flash over Nickel
❹ Contact Style:
D = Downside contact
❺ Color: 0 = Nature

❻ Packing: R = Tape & Reel
❼ Other Options: 0 = Standard
M = With Mylar
*Special options consult manufacturer
❽ -NH = For Lead Free IR process and Halogen-Free

CF37 Series 0.80mm(.031")H=1.95 SMT ZIF One-Touch FFC/FPC Connectors

- ◎ 1.95mm above the board
- ◎ FFC/FPC zero insertion force and high holding force
- ◎ Insulation: High temperature plastic UL 94V-0, Color Nature
- ◎ Cover: High temperature plastic UL 94V-0, Color Black
- ◎ Actuator designed easy for FFC/FPC installation and reliable operation
- ◎ With metal fixed tabs to secure connector in place

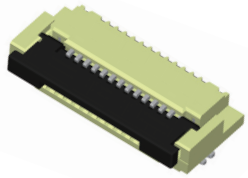

RoHS Compliant Pb HF

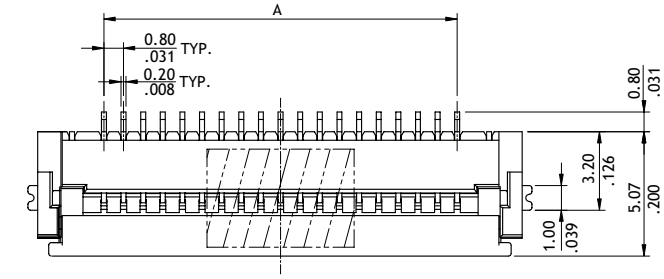

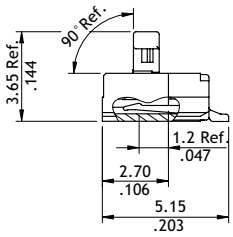

A = 0.8 x No. of Spaces
B = A + 5.3
C = A + 1.66

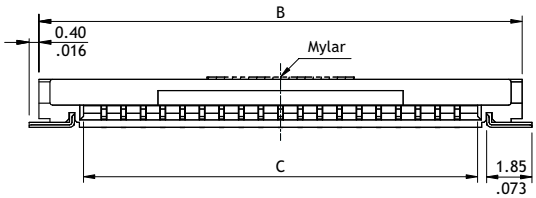

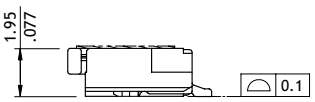

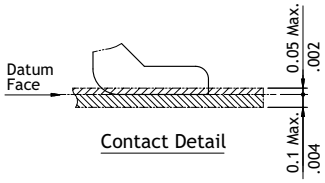

Contact Detail

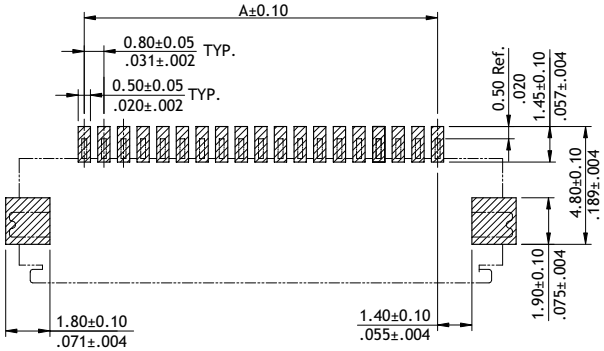

Recommended P.C. Board Layout

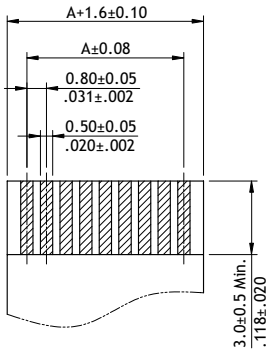

Accommodated FFC/FPC

Ordering Code

❶ ❷ ❸ ❹ ❺ ❻ ❼ ❽

CF37 04 2 D 0 R 0 – NH

❶ Series No.
❷ No. of Circuits: 04 to 30
(Available: 4)
Circuits not found above please consult manufacturer

❸ Plating Code:
1 = Matte Tin over Nickel
2 = Gold flash over Nickel
❹ Contact Style:
D = Downside contact
❺ Color: 0 = Nature

❻ Packing Options: R = Tape & Reel
❼ Other Options: 0 = Standard
M = With Mylar
*Special options consult manufacturer
❽ -NH = For Lead Free IR process and Halogen-Free

CF17 Series 0.80mm(.031")H=2.00 SMT ZIF Upside FFC/FPC Connectors

◎ Insulator: High temperature plastic UL 94V-0, Color Nature
◎ Cover: High temperature plastic UL 94V-0, Color Black
◎ With metal fixed tabs to secure connector in place

RoHS Compliant Pb HF

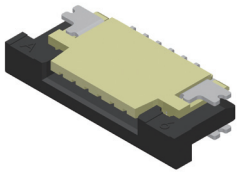

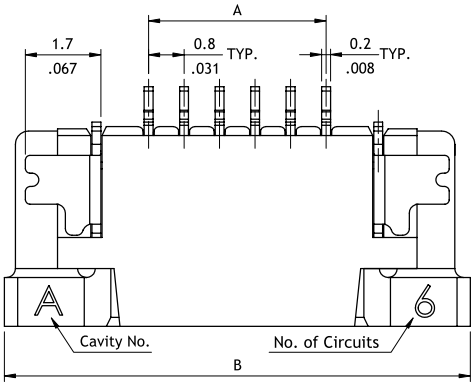

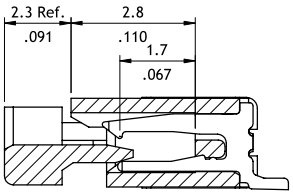

SEC.: X'-X'

A = 0.80 * No. of Spaces
B = A + 6.60
C = A + 1.70

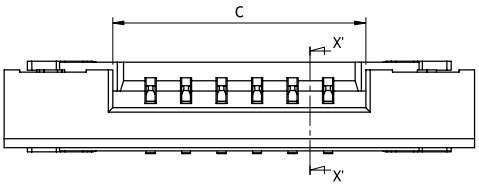

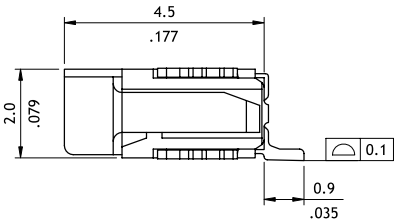

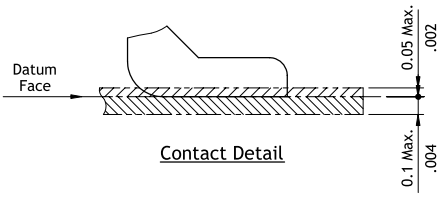

Contact Detail

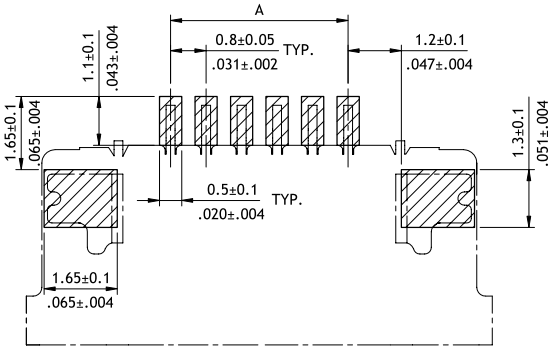

Sold Pad Pattern

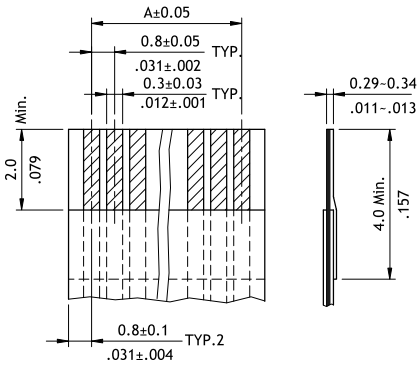

Accommodated FFC/FPC

Ordering Code

❶	❷	❸	❹	❺	❻	❼		❽
CF17	34	1	U	0	R	A	–	NH

❶ Series No.
❷ No. of Circuits: 04 to 40
(Available: 26,30,34)
Circuits not found above please consult manufacturer

❸ Plating Code:
1 = Matte Tin over Nickel
2 = Gold flash over Nickel
❹ Contact Style:
U = Upside Contact
❺ Color: 0 = Nature

❻ Packing: R = Tape & Reel
T = Tube
❼ Other Options: A = Standard
*Special options consult manufacturer
❽ -NH = For Lead Free soldering process and Halogen-Free

CF07 Series 1.00mm(.039")H=2.60 SMT ZIF FFC/FPC Connectors

◎ Insulator: High temperature plastic UL 94V-0, Color Nature
◎ Slider: High temperature plastic UL 94V-0, Color Black
◎ With metal fixed tabs to secure connector in place

RoHS Compliant

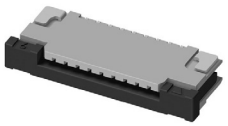
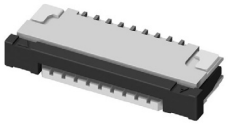

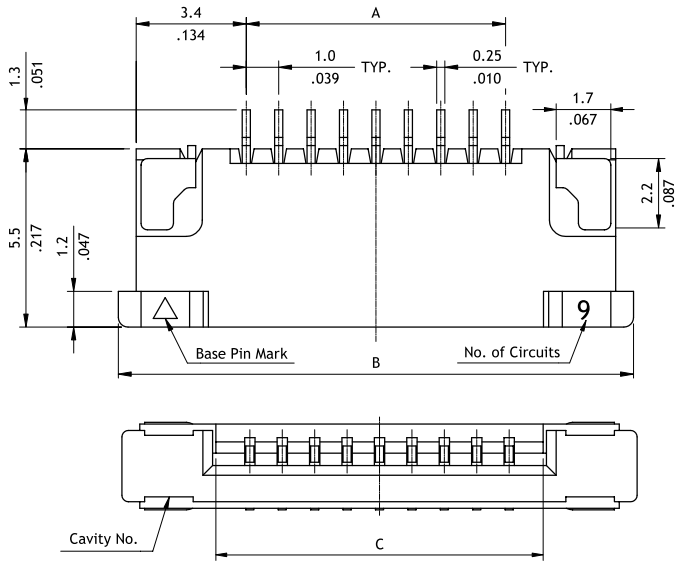

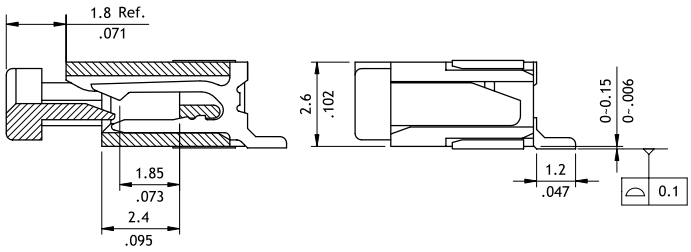

P/N CF07***D***-NH

(Downside)

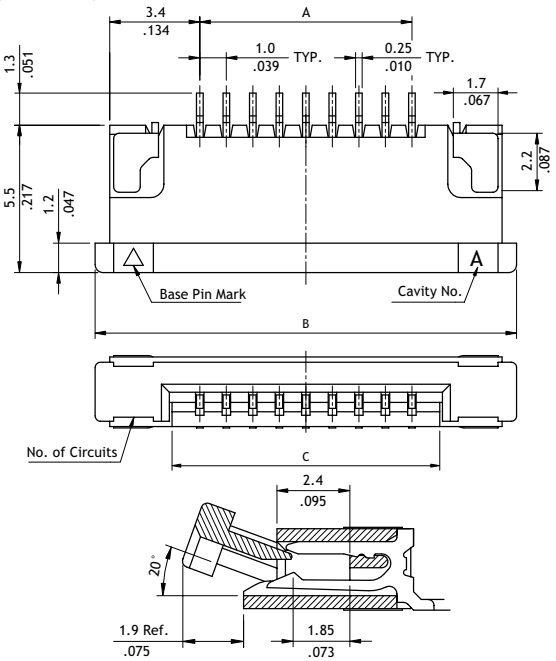

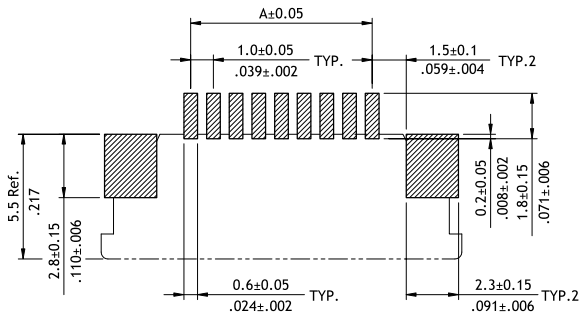

Solder Pad Pattern

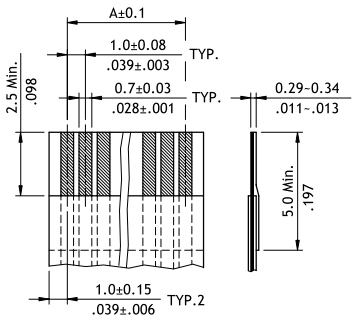

Accommodated FFC

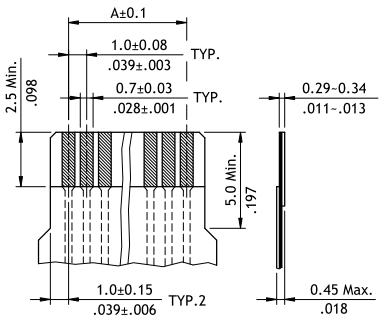

Accommodated FPC

Ordering Code

❶	❷	❸	❹	❺	❻	❼		❽
CF07	32	1	U	0	R	0	–	NH

❶ Series No.
❷ No. of Circuits: 04 to 32
❸ Plating Code:
1 = Matte Tin over Nickel

❹ Contact Style:
U = Upside Contact
D = Downside Contact
❺ Color: 0 = Nature
❻ Packing: R = Tape & Reel
T = Tube

❼ Other Options:
0 = Standard
*Special options consult manufacturer
❽ -NH = For Lead Free soldering process and Halogen-Free

CF10 Series 1.00mm(.039")H=3.80/5.00 DIP ZIF FFC/FPC Connectors

◎ Tin contacts with kinked tail
◎ Insulator: High temperature plastic UL 94V-0, Color Nature
◎ Slider: High temperature plastic UL 94V-0, Color Brown / Black

RoHS Compliant Pb HF

P/N	CF10**1U0T0-NH

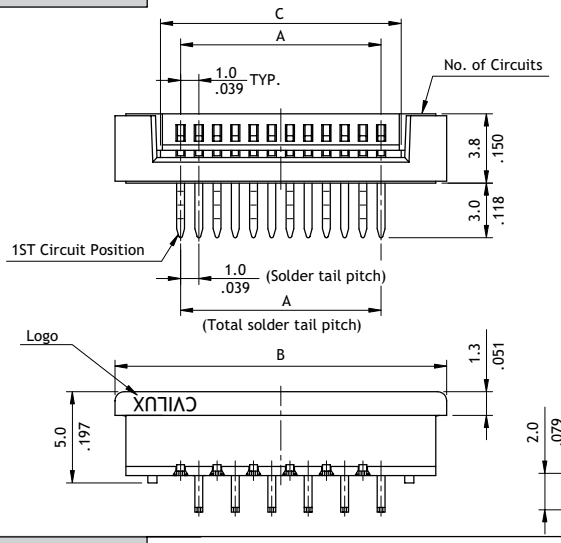

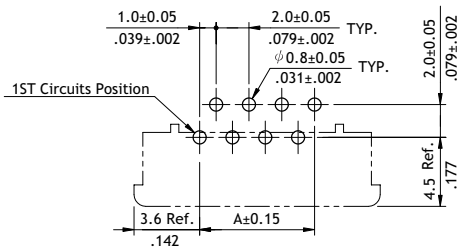

Recommended P.C. Board Layout

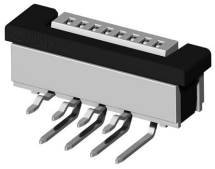

A = 1.0 x No. of Spaces
B = A + 7.2
C = A + 2.1

P/N	CF10**1D0T0-NH

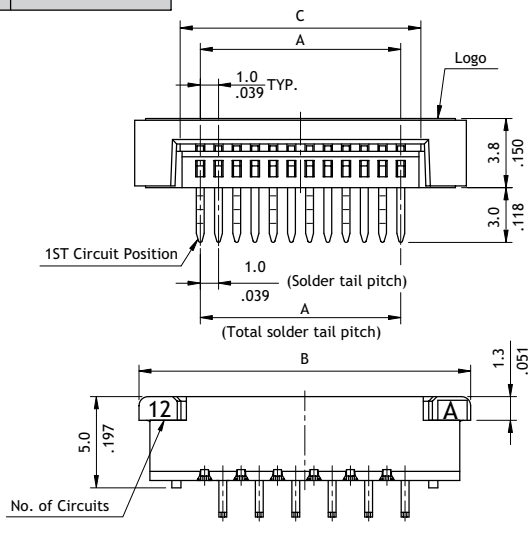

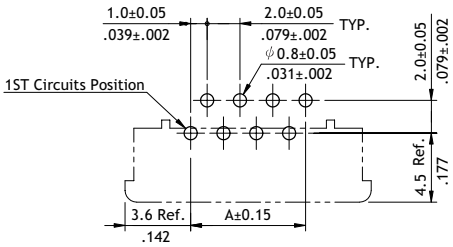

Recommended P.C. Board Layout

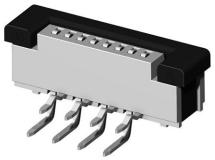

A = 1.0 x No. of Spaces
B = A + 7.2
C = A + 2.1

P/N	CF10**1V0T0-NH

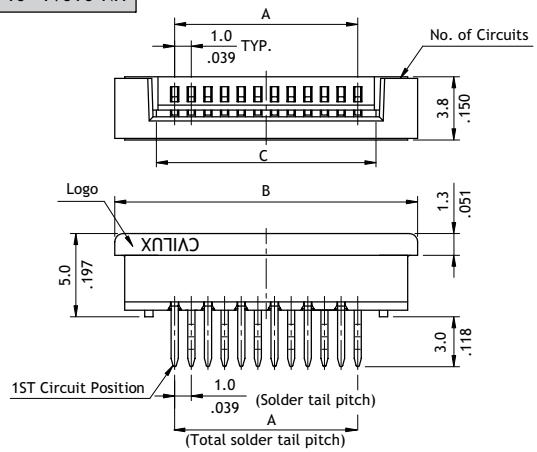

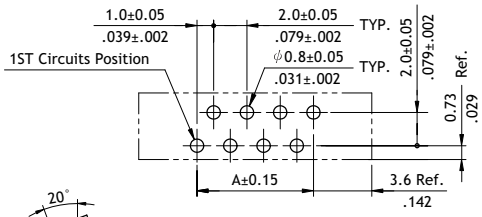

Recommended P.C. Board Layout

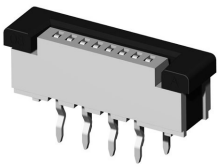

A = 1.0 x No. of Spaces
B = A + 7.2
C = A + 2.1

CF10 Series 1.00mm(.039")H=5.20 SMT ZIF FFC/FPC Connectors

◎ Insulator: High temperature plastic UL 94V-0, Color Nature
◎ Slider: High temperature plastic UL 94V-0, Color Brown / Black

RoHS Compliant

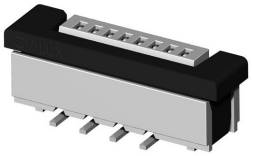

P/N	CF10**1M0*0-NH

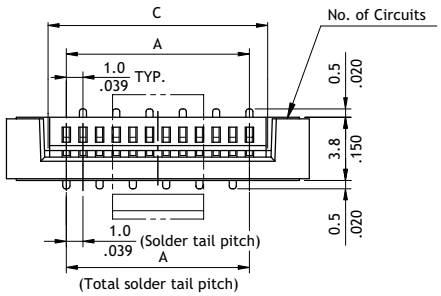

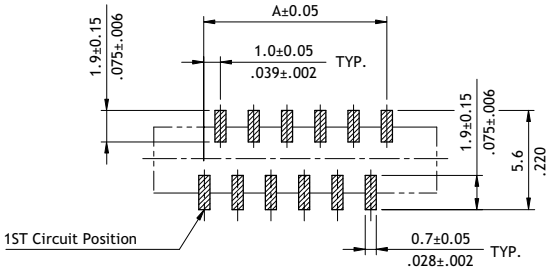

Recommended P.C. Board Layout

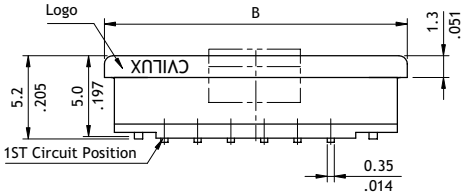

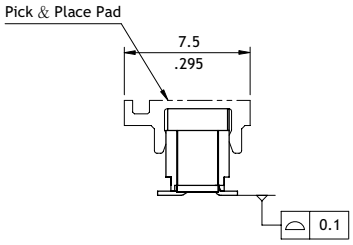

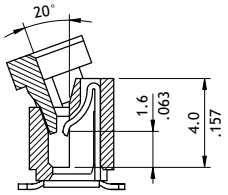

A = 1.0 x No. of Spaces
B = A + 7.2
C = A + 2.1

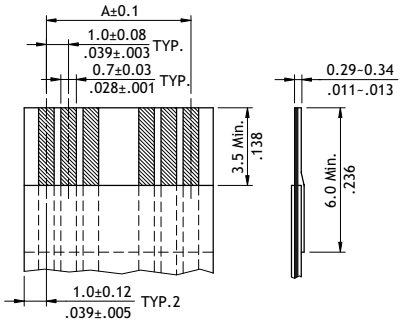

Accommodated FFC

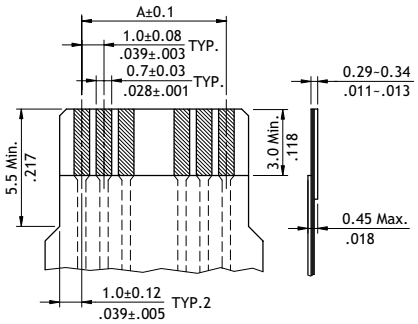

Accommodated FPC

Ordering Code

❶ ❷ ❸ ❹ ❺ ❻ ❼ ❽
CF10 32 1 V 0 T 0 – NH

❶ Series No.
❷ No. of Circuits: 04 to 32
❸ Plating Code: 1 = Matte Tin over Nickel
❹ Contact Style: U = Upside Contact (DIP)
D = Downside Contact (DIP)
V = Vertical Type (DIP)
M = Top entry Type (SMT)
❺ Color: 0 = Nature
❻ Packing:
T = Tube packing without Pad (DIP or SMT)
R = Reel packing with Pad (SMT)
❼ Other Options: 0 = Standard
*Special options consult manufacturer
❽ -LF = For Lead Free soldering process
-NH = For Lead Free soldering process and Halogen-Free

CF57 Series 1.00mm(.039")H=5.50 SMT ZIF Vertical FFC/FPC Connectors

◎ Insulator: High temperature plastic UL 94V-0, Color Nature
◎ Slider: High temperature plastic UL 94V-0, Color Black
◎ With metal fixed tabs to secure connector in place

NEW

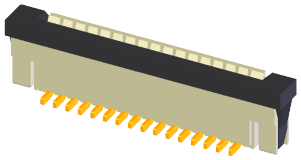

RoHS Compliant Pb HF

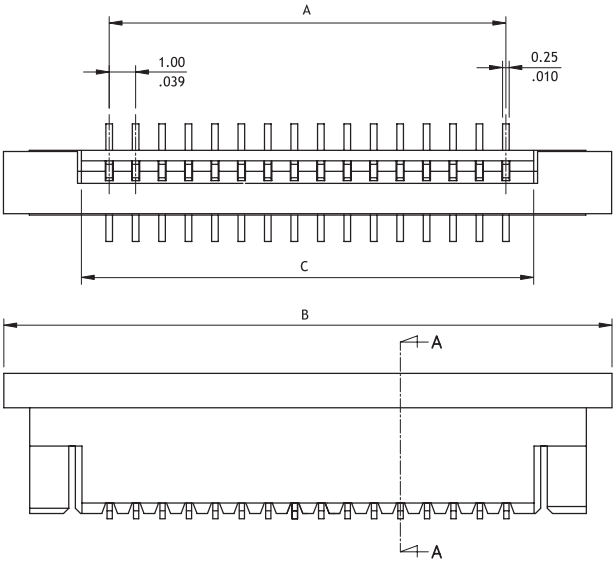

A = 1.0 x No. of Spaces
B = A + 8.0
C = A + 2.1

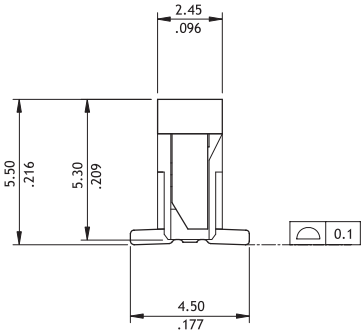

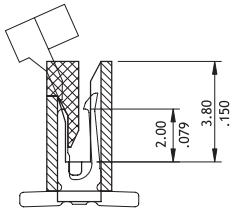

SECTION A–A

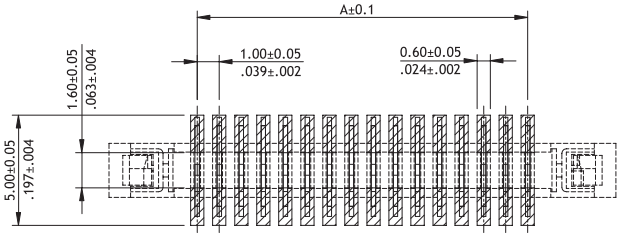

Recommended P.C. Board Layout

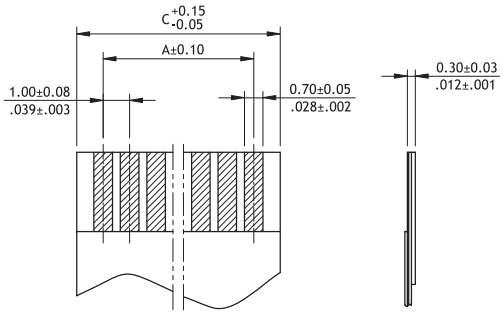

Accommodated FFC/FPC

Ordering Code

❶ ❷ ❸ ❹ ❺ ❻ ❼ ❽

CF57 12 1 V 0 R 0 – NH

❶ Series No.
❷ No. of Circuits: 04 to 40
❸ Plating Code:
1 = Matte Tin over Nickel
❹ Contact Style:
V = Vertical Type
❺ Color: 0 = Nature
❻ Packing: R = Tape & Reel
❼ Other Options:
0 = Standard
❽ -NH = For Lead Free IR process and Halogen-Free

CF06 Series 1.00mm(.039")H=1.80 SMT LIF FFC/FPC Connectors

- ◎ 1.8mm above the board
- ◎ Copper alloy dual contacts
- ◎ Insulator: High temperature plastic UL 94V-0, Color Nature
- ◎ With metal fixed tabs to secure connector in place

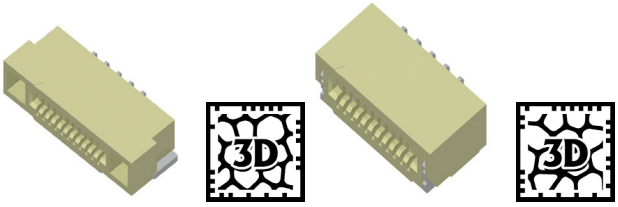

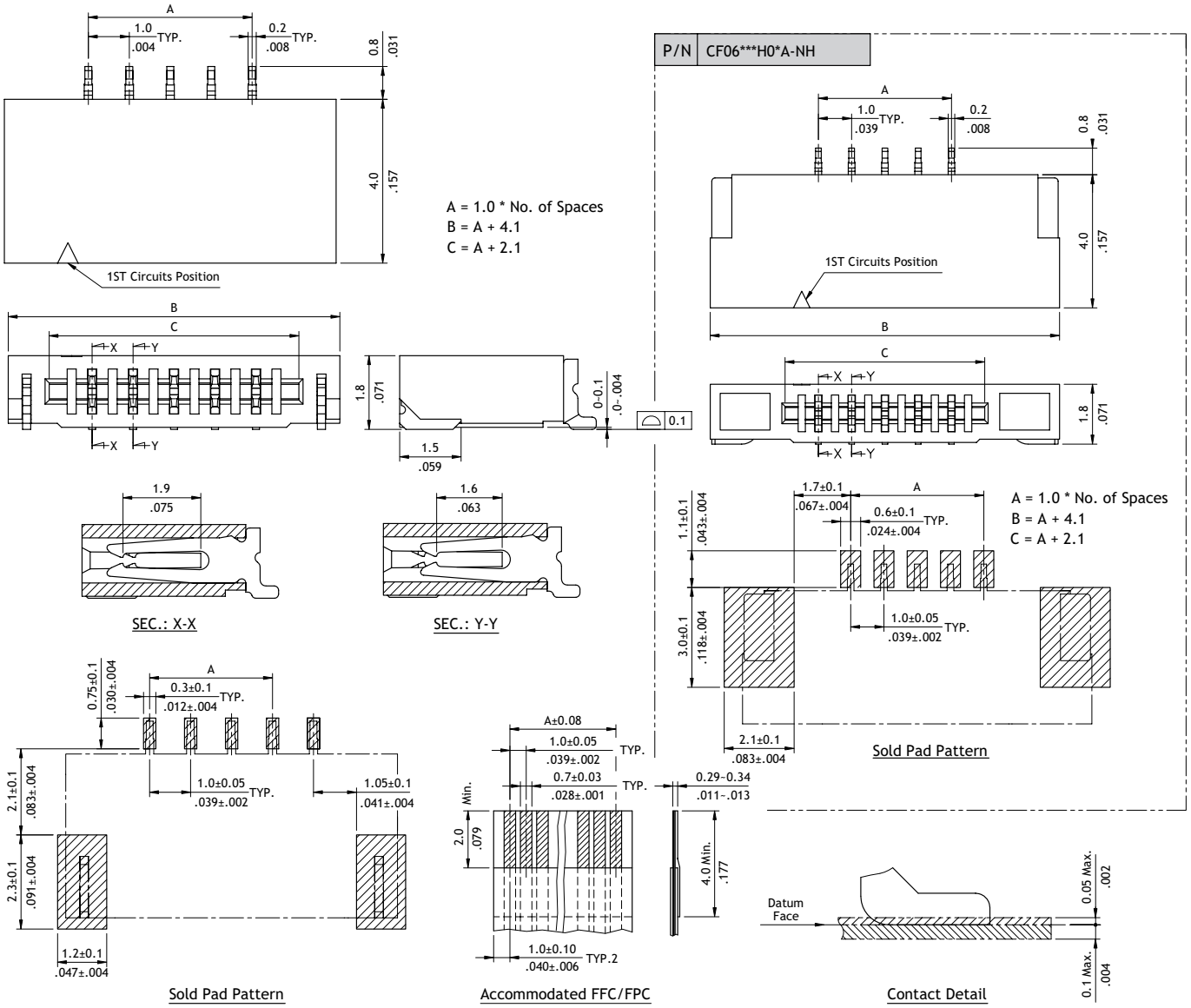

Ordering Code

❶	❷	❸	❹	❺	❻	❼		❽
CF06	15	1	H	0	R	0	–	NH

❶ Series No.
❷ No. of Circuits: 04 to 15
❸ Plating Code:
1 = Matte Tin over Nickel
2 = Gold flash over Nickel

❹ Contact Style:
H = Side Entry
❺ Color: 0 = Nature
❻ Packing:
R = Tape & Reel
T = Tube

❼ Other Options:
0 = Standard
A = Base of Wide size
*Special options consult manufacturer
❽ -NH = For Lead Free soldering process and Halogen-Free

CF08 Series 1.00mm(.039")H=2.60/3.55 SMT LIF & SMT LIF Vertical FFC/FPC

◎ Tin over copper alloy dual contacts
◎ Insulator: High temperature plastic UL 94V-0
◎ With metal fixed tabs to secure connector in place

RoHS Compliant Pb HF

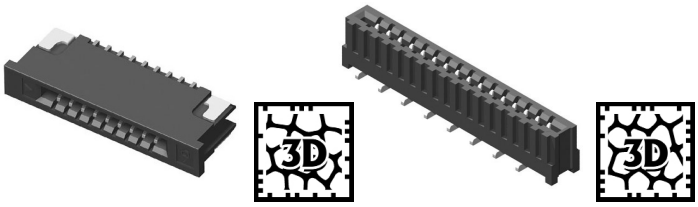

A = 1.0 * No. of Spaces
B = A + 8.0
C = A + 2.1

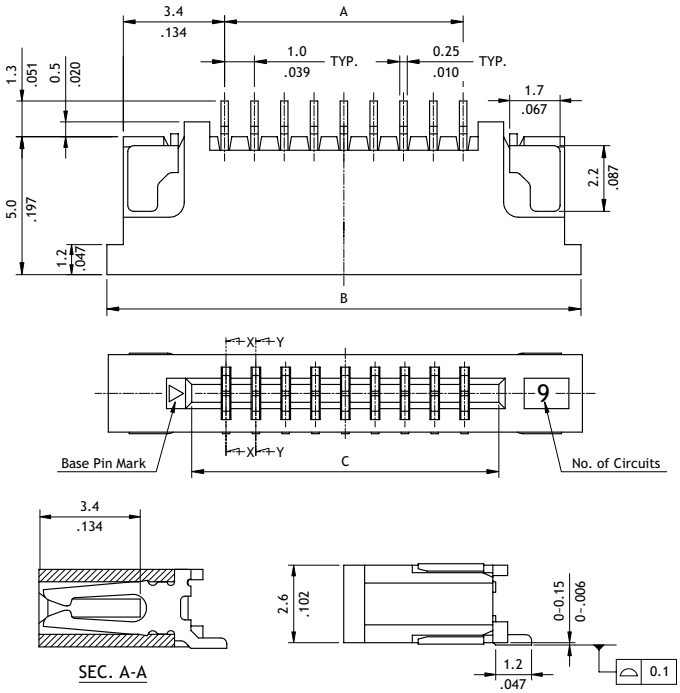

P/N CF08***M1*0-LF

(Top Entry)

A = 1.0 * No. of Spaces
B = A + 3.3
C = A + 2.1

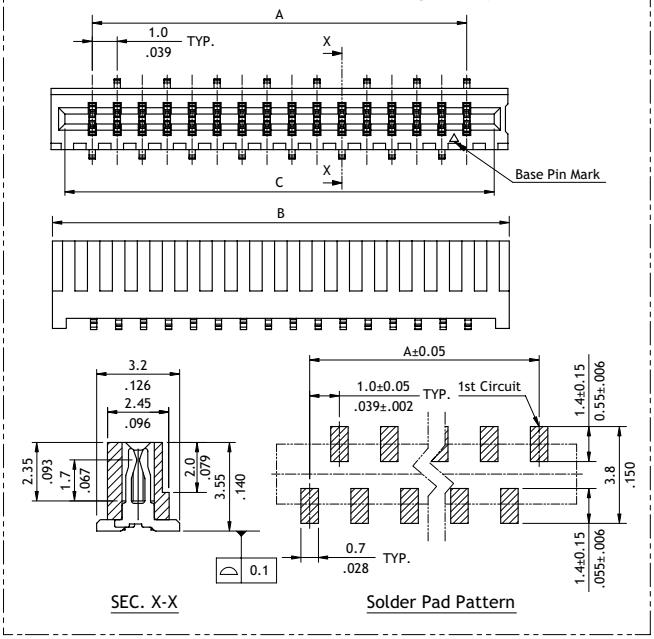

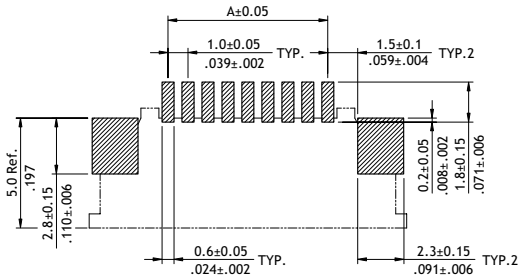

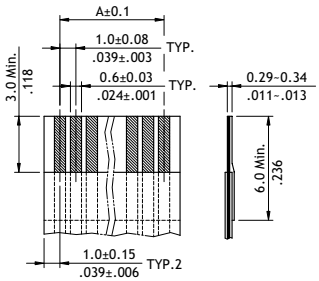

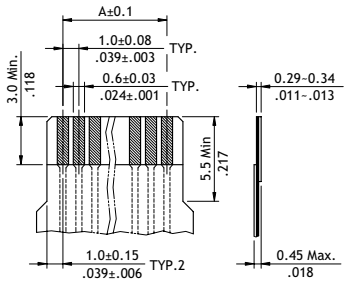

Ordering Code

❶	❷	❸	❹	❺	❻	❼		❽
CF08	32	1	H	2	R	0	–	NH

❶ Series No.
❷ No. of Circuits: 04 to 32
❸ Plating Code:
1 = Matte Tin over Nickel

❹ Contact Style:
H = SMT Side Entry
M = SMT Top Entry
❺ Color: 1 = Black (Top Entry)
2 = Brown (Side Entry)
❻ Packing: R = Tape & Reel
T = Tube

❼ Other Options: 0 = Standard
*Special options consult manufacturer
❽ -LF = For Lead Free soldering process (Top Entry)
-NH = For Lead Free soldering process and Halogen-Free (Side Entry)

CF09 Series 1.00mm(.039")H=2.60/5.50 DIP LIF FFC/FPC Connectors

◎ Tin over copper alloy dual contacts
◎ Insulator: High temperature plastic UL 94V-0

RoHS Compliant Pb HF

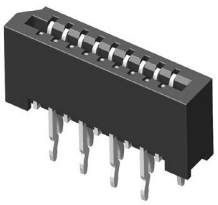

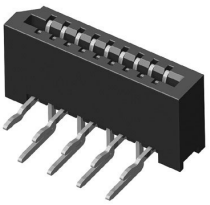

P/N	CF09**1V200-LF

A = 1.0 * No. of Spaces
B = A + 4.0
C = A + 2.1

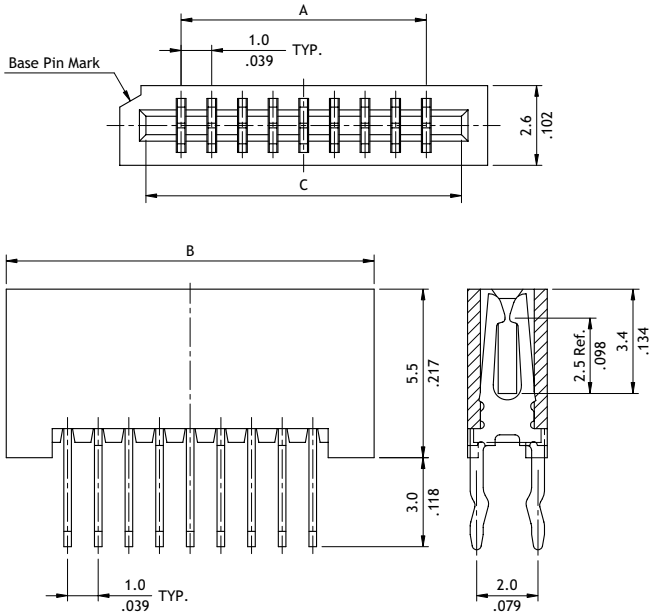

P/N	CF09**1H200-LF

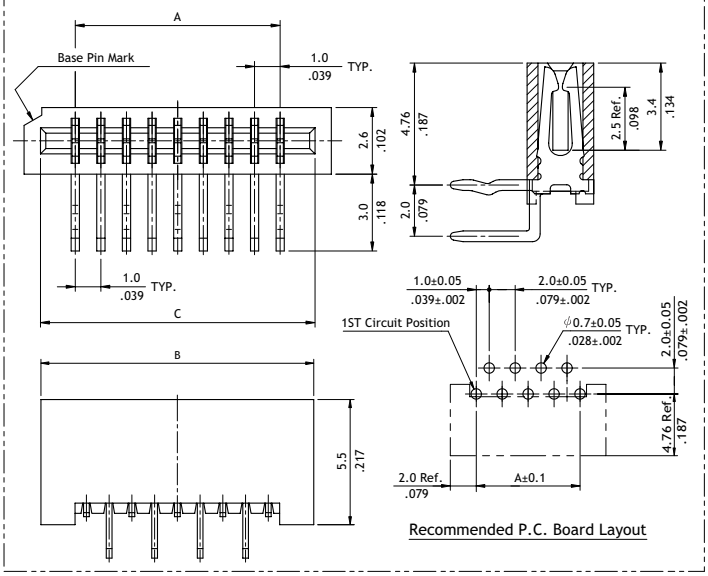

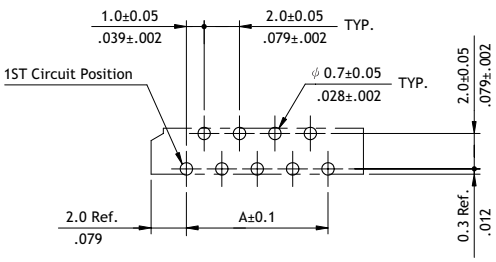

Recommended P.C. Board Layout

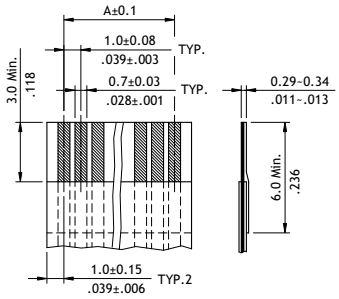

Accommodated FFC

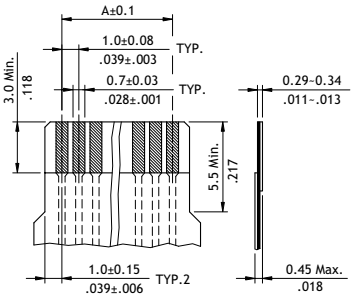

Accommodated FPC

Ordering Code

❶ ❷ ❸ ❹ ❺ ❻ ❼

CF09 32 1 H 2 00 – LF

❶ Series No.
❷ No. of Circuits: 04 to 32
❸ Plating Code:
1 = Matte Tin over Nickel

❹ Contact Style:
V = Top Entry
H = Side Entry
❺ Color: 1 = Black (NH)
2 = Brown (LF)

❻ Other Options: 00 = Standard
*Special options consult manufacturer
❼ -LF = For Lead Free soldering process
-NH = For Lead Free soldering process and Halogen-Free

CF16 Series 1.00mm(.039")H=3.80/5.00 DIP LIF FFC/FPC Connectors

◎ Tin contacts with kinked tail
◎ Insulator: High temperature plastic UL 94V-0, Color Nature

RoHS Compliant

P/N	CF16**1U0T0-NH

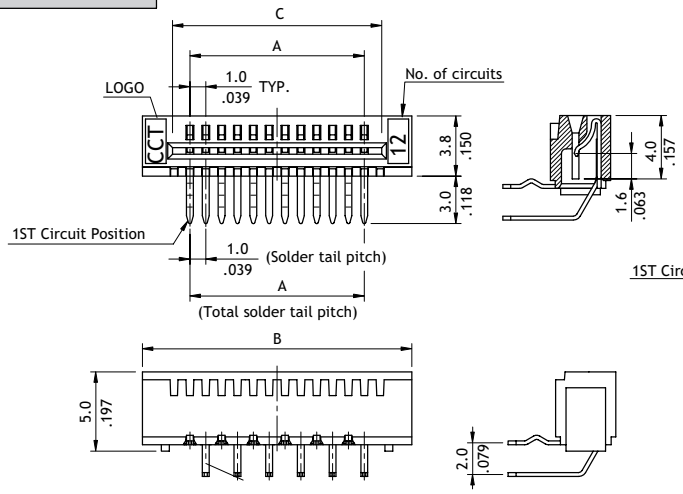

A = 1.0 x No. of Spaces
B = A + 6.0
C = A + 2.1

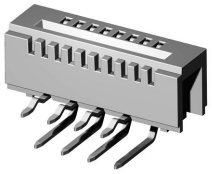

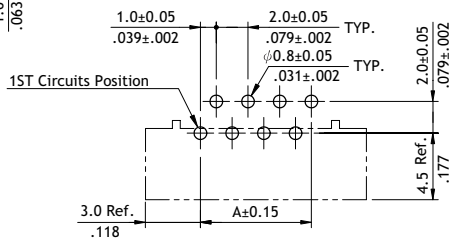

Recommended P.C. Board Layout

P/N	CF16**1D0T0-NH

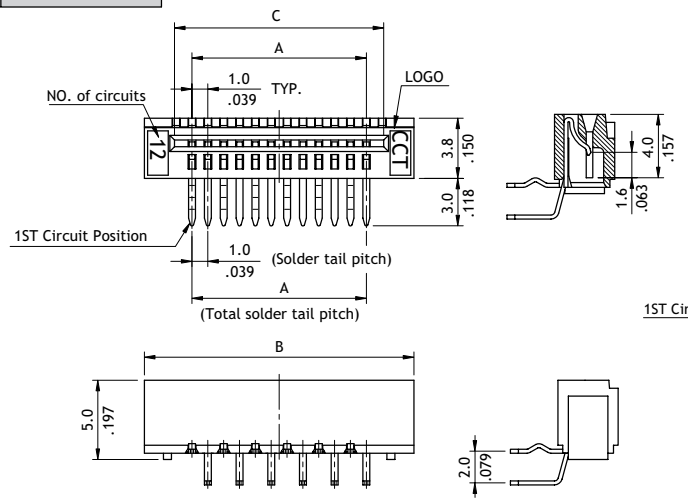

A = 1.0 x No. of Spaces
B = A + 6.0
C = A + 2.1

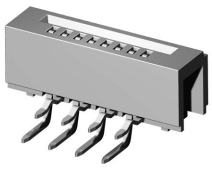

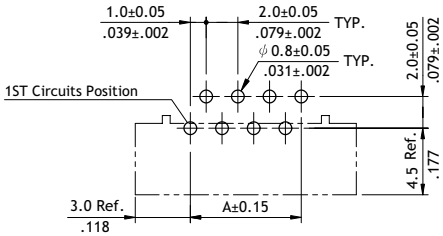

Recommended P.C. Board Layout

P/N	CF16**1V0T0-NH

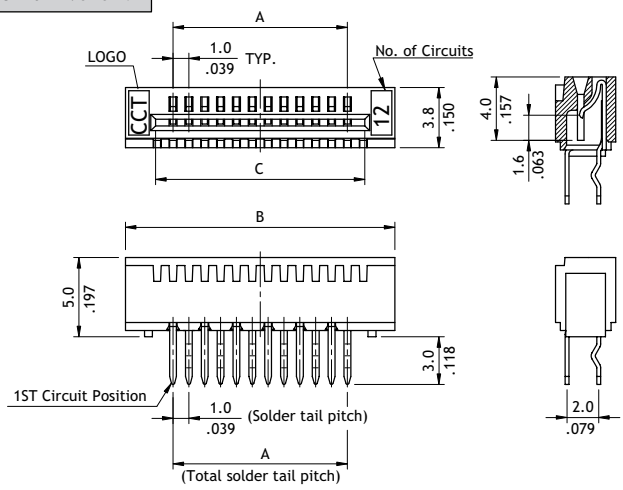

A = 1.0 x No. of Spaces
B = A + 6.0
C = A + 2.1

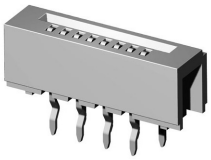

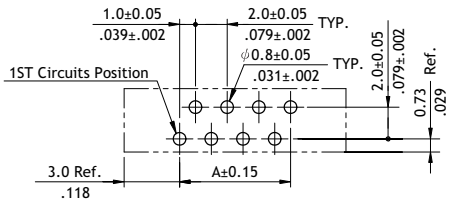

Recommended P.C. Board Layout

CF16 Series 1.00mm(.039")H=3.80/5.20 SMT LIF FFC/FPC Connectors

◎ Insulator: High temperature plastic UL 94V-0, Color Nature
◎ With metal fixed tabs to secre connector in place

RoHS Compliant

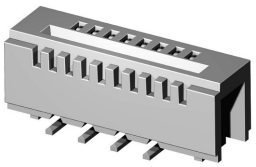

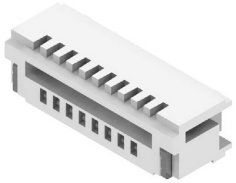

P/N CF16**1M0*0-NH

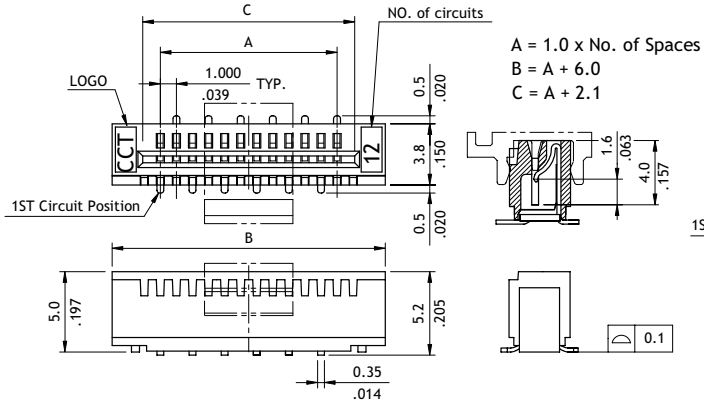

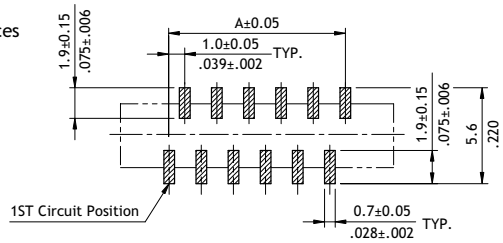

Solder Pad Pattern

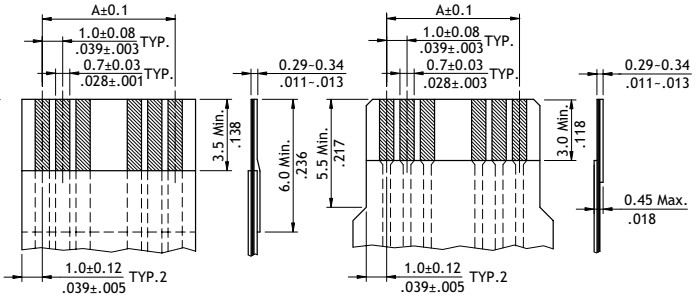

Accommodated FFC　　Accommodated FPC

P/N CF16**1S0*0-NH

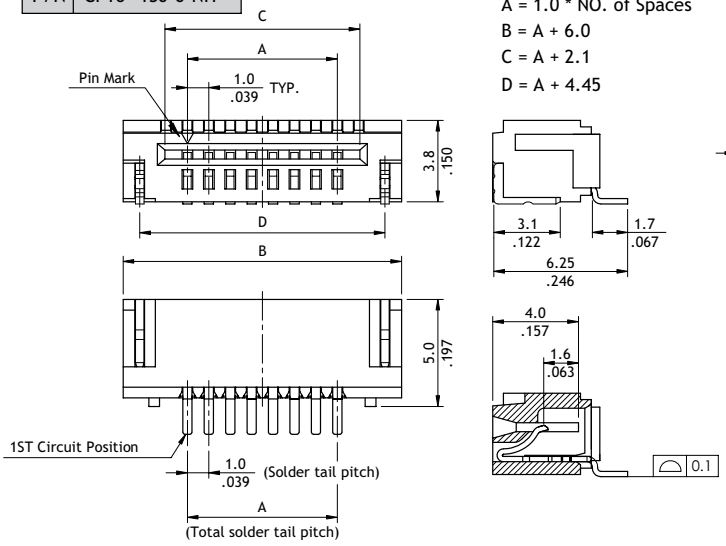

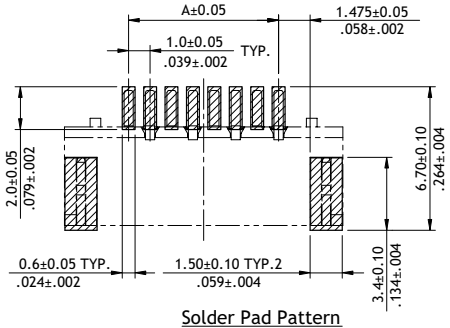

Solder Pad Pattern

Ordering Code

❶	❷	❸	❹	❺	❻	❼		❽
CF16	32	1	V	0	T	0	–	NH

❶ Series No.
❷ No. of Circuits: 03 to 32
❸ Plating Code:
1 = Matte Tin over Nickel
❹ Contact Style: U = Upside Contact (DIP)
D = Downside Contact (DIP)
V = Vertical Type (DIP)
M = Top entry Type (SMT)
S = Side entry Type (SMT)
❺ Color: 0 = Nature
❻ Packing: T = Tube packing without Pad (DIP or SMT)
R = Reel packing (SMT)
❼ Other Options: 0 = Standard
*Special options consult manufacturer
❽ -LF = For Lead Free soldering process
-NH = For Lead Free soldering process and Halogen-Free

CF12 Series 1.25mm(.049")H=4.00/6.80 DIP LIF FFC/FPC Connectors

◎ Tin plated contacts with kinked tail
◎ Insulator: High temperature plastic UL 94V-0, Color Black

RoHS Compliant

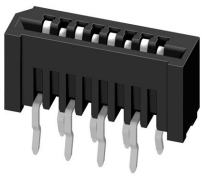
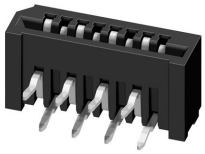

Straight

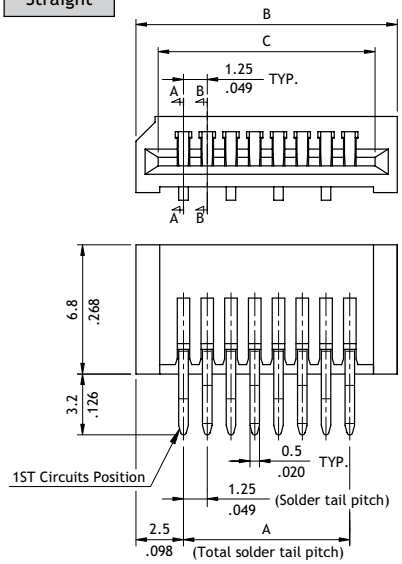

A = 1.25 x No. of Spaces
B = A + 5.0
C = A + 2.66

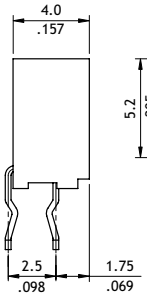

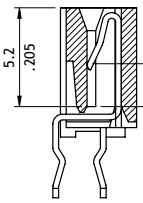

A-A SEC.

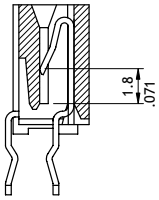

B-B SEC.

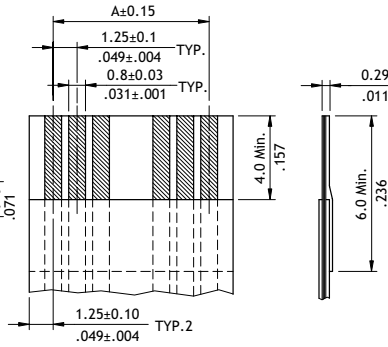

Accommodated FFC

Right Angle

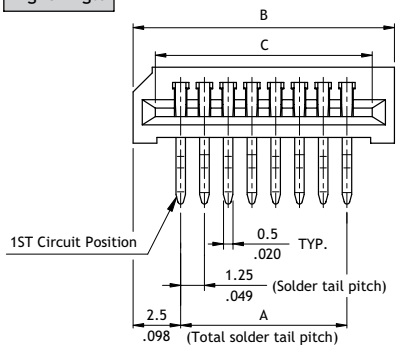

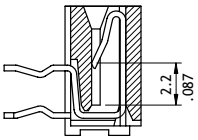

A-A SEC.

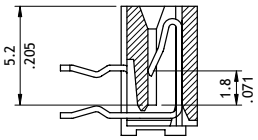

B-B SEC.

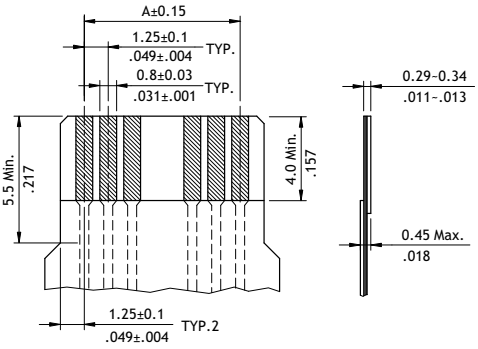

Accommodated FFC

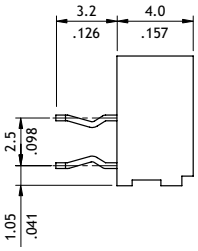

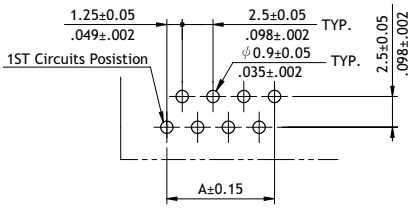

Recommended P.C. Board Layout

Ordering Code

❶	❷	❸	❹	❺	❻		❼
CF12	36	1	V0	T	0	–	LF

❶ Series No.
❷ No. of Circuits: 03 to 36
❸ Plating Code:
1 = Matte Tin over Nickel

❹ Entry Options:
V0 = Straight
H0 = Right Angle

❺ Packing:
T = Tube

❻ Other Options:
0 = Standard
*Special options consult manufacturer

❼ -LF = For Lead Free soldering process

CF14 Series 2.54mm(.100")H=4.50/6.70 DIP LIF FFC/FPC Connectors

◎ Insulator: Glass filled polyester UL 94V-0, Color Black

RoHS Compliant

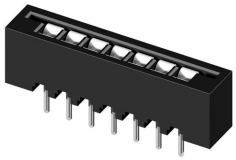

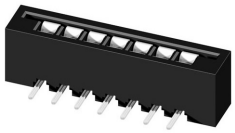

Straight

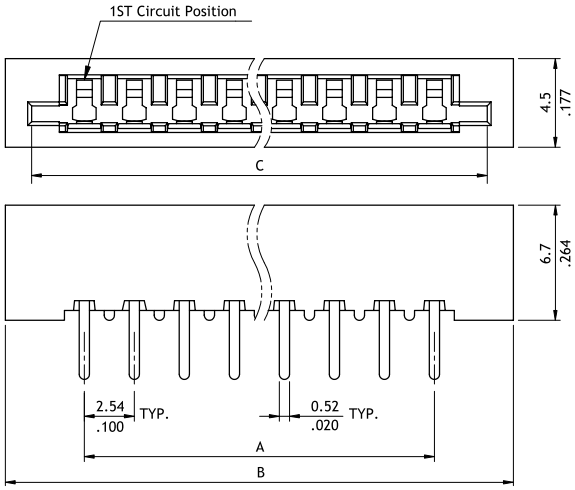

A = 2.54 x No. of Spaces
B = A + 8.0
C = A + 5.9

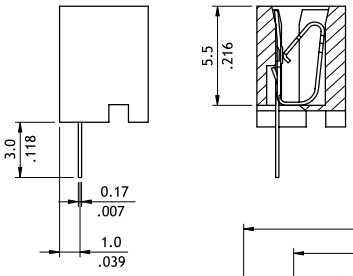

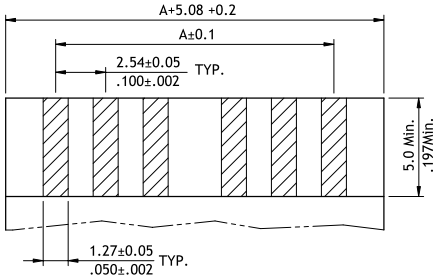

Accommodated FPC/FFC
Thickness: 0.3mm±0.05

Right Angle

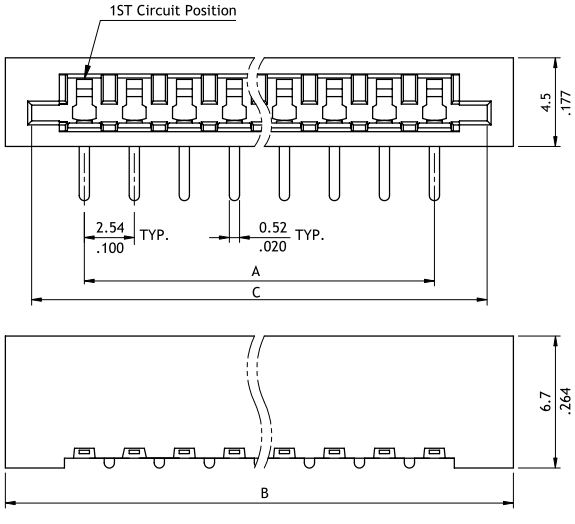

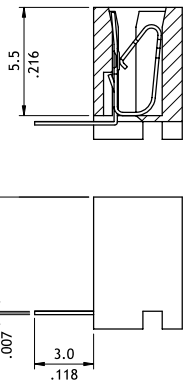

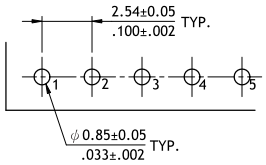

Recommended P.C. Board Layout

Ordering Code

❶	❷	❸	❹	❺
CF14	26	1	V	100

❶ Series No.
❷ No. of Circuits: 06 to 26
❸ Plating Code:
1 = Tin over Nickel

❹ Entry Options: V = Straight
H = Right Angle

❺ Other Options:
100 = Color Black(Standard)
*Special options consult manufacturer