Series JWS / JWT

LAMBDA

50-600

WATTS

POWER SUPPLY AC/DC

SINGLE AND TRIPLE OUTPUT

Universal input

PFC EN61000-3-2 compliant

EMI meets EN 55022-B
EN 55011-B

Remote on/off signal (option)

Low cost

JWS
Guarantee 5 years

JWT
Guarantee 3 years

INPUT

Input voltage range	85-265 VAC
Frequency	47 - 63Hz
Inrush current (to 200 VAC)	< 28 A JWS 150, 300, 600 < 50 A
DC input	120 - 330 VDC

OUTPUT

Power (convection cooled) (fan cooled)	50 to 600 W 50, 75, 100, 150W 300, 600W
Voltage adjustment	see table of models (1% model 2V)
Line regulation	0.4% (0.6% model 3.3 V) (1% model 2V)
Load regulation	0.8% max (1.2% model 3.3 V) (1.5% model 2V)
Hold up	20 ms
Ripple and noise (value peak to peak)	3.3 V - 5 V 120 mV 12 V - 15 V - 24 V 150 mV 48 V 200 mV
Temperature coefficient	< 0.02%/°C < 0.03%/°C for JWT (outputs)
Over current protection	current limit
Over voltage protection	standard

GENERAL

Efficiency	65 to 80% model dependent
Voltage isolation : Input-output Input-ground Output-ground	 3000 VAC 2000 VAC 500 VAC

ENVIRONMENTAL

Operating temperature range	-10°C to +65°C
Derating (typ)	-10°C to +50°C 100% +65°C 50%
Storage temperature	-30°C to +85°C
Relative humidity operating storage	 30% to 90% 10% to 95%
Shock	20G
Vibration	2G
EMI	- Conducted and radiated EN 55011 and 55022 curve B - FCC curve B - VCCI curve B - Immunity EN 61000-4-2/3/4/5/6 - Certification VDE 0160 (machinery directive)

OUTLINE SPECIFICATION (continued)

PHYSICAL CHARACTERISTICS

Dimensions	see physical specification
Type of connections Input/output	JWT 70 and 100 JWS 50 and 75 barrier strip or molex (see options) JWS 100, 150, 300 and 600 barrier strip only
Format	enclosed (see options)

TABLE OF MODELS

Model*	Case	Max. Power Watts	Output Volts (Adjustm.)	Amp.
JWS 300-2	300	120	2 (+20%; -10%)	60
JWS 600-2	600	240		120
JWS 50-3	50	33	3.3 (+10%; -13%)	10
JWS 75-3	75	49.5		15
JWS 100-3	100	66		20
JWS 150-3	150	99		30
JWS 300-3	300	198		60
JWS 600-3	600	396		120
JWS 50-5	50	50	5 ±10%	10
JWS 75-5	75	75		15
JWS 100-5	100	100		20
JWS 150-5	150	150		30
JWS 300-5	300	300	5 (+20%; -10%)	60
JWS 600-5	600	600		120
JWS 100-6	100	100.2	6 (+/-10%)	16.7
JWS 300-6	300	300	6 (+20%; -10%)	50
JWS 600-6	600	600	6 (+20%; -10%)	100
JWS 600-8	600	544	8 (+20%; -10%)	68
JWS 50-9	50	50.4	9 ±10%	5.6
JWS 100-9	100	100.8		11.2
JWS 300-9	300	300	9 (+20%; -10%)	34
JWS 600-9	600	612	9 (+20%; -10%)	68
JWS 50-12	50	51.6	12 ±10%	4.3
JWS 75-12	75	75.6		6.3
JWS 100-12	100	102		8.5
JWS 150-12	150	156		13

Model*	Case	Max. Power Watts	Output Volts (Adjustm.)	Amp.
JWS 300-12	300	324	12 (+20%; -10%)	27
JWS 600-12	600	636		53
JWS 50-15	50	52.5	15 ±10%	3.5
JWS 75-15	75	75		5
JWS 100-15	100	105		7
JWS 150-15	150	150		10
JWS 300-15	300	330	15 (+20%; -10-%)	22
JWS 600-15	600	645		43
JWS 50-24	50	52.8	24 ±10%	2.2
JWS 75-24	75	76.8		3.2
JWS 100-24	100	108		4.5
JWS 150-24	150	156		6.5
JWS 300-24	300	336	24 (+20%; -10-%)	14
JWS 600-24	600	648		27
JWS 50 28	50	56	28 ±10%	2
JWS 600 28	600	644	28 (+20%; -10%)	23
JWS 50-48	50	52.8	48 ±10%	1.1
JWS 75-48	75	76.8		1.6
JWS 100-48	100	100.8		2.1
JWS 150-48	150	158.4		3.3
JWS 300-48	300	312		6.5
JWS 600-48	600	624		13

* **Standard :** barrier strip and cover – Suffix 'A' (refer to options)

Model*	Case	Max. Power Watts	Output 1 Volts	Output 1 Amp.	Output 2 Volts	Output 2 Amp.	Output 3 Volts	Output 3 Amp.
JWT 75-522	75	75	+5	8[1]	+12	4	-12	0.5
JWT 100-522	100	100	+5	13[1]	+12	5.5	-12	1
JWT 75-5FF	75	75	+5	8[1]	+15	3.2	-15	0.5
JWT 100-5FF	100	100	+5	13[1]	+15	4.5	-15	1
JWT 75-525	75	75	+5	8[1]	+12	4	-5	0.5
JWT 100-525	100	100	+5	13[1]	+12	5.5	-5	1

* **Standard :** barrier strip and cover – Suffix 'A' (refer to options)

Note: 1 - minimum load : 10%

OPTIONS

Option B : open frame with molex connectors (JWS50/75 JWT 75/100)
Option C : cover and molex connectors (JWS50/75 JWT 50/75), example: JWS 50-5/C
No Suffix : open frame with barrier strip
Option R : remote control

JWS 50 (barrier strip)
Weight 0.35 kg

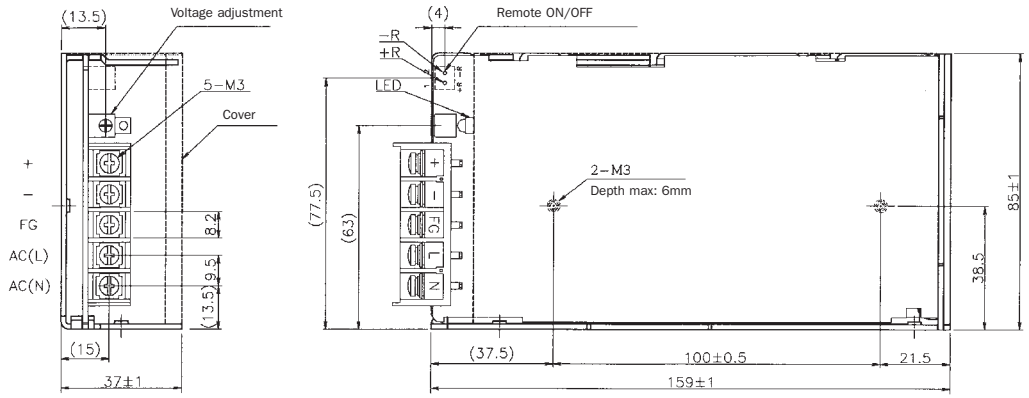

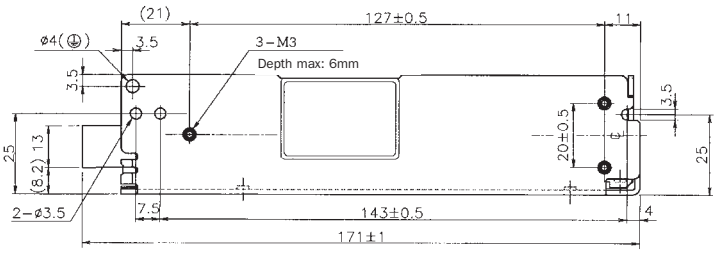

Remote ON/OFF - Connector JST	
Connector	B2B-XH-A
Housing	XHP-2
Terminal pin	BXH-001T-P0.6 or SXH-001T-P0.6

JWS 50 (molex connectors)
Weight 0.35 kg

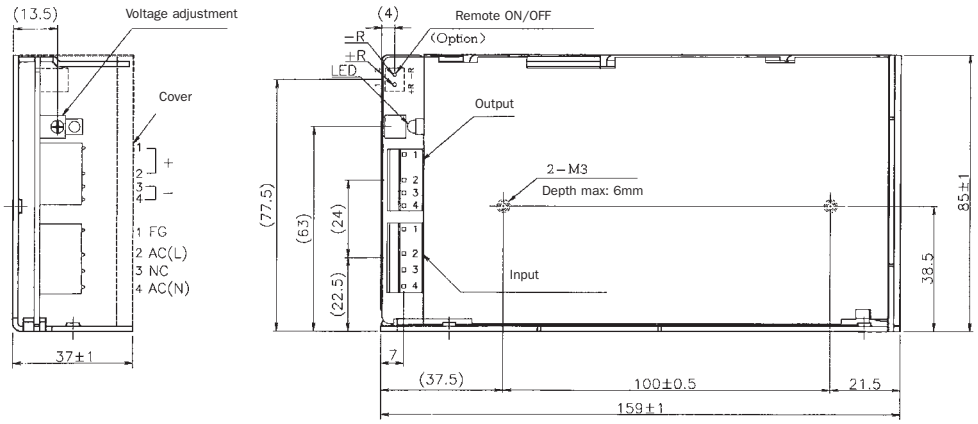

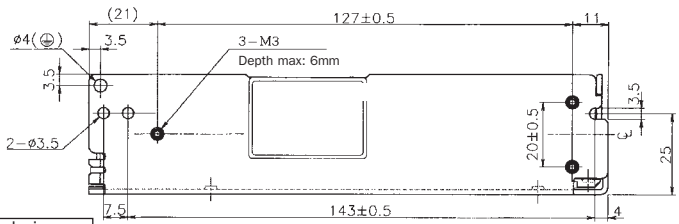

Remote ON/OFF - Connector JST	
Connector	B2B-XH-A
Housing	XHP-2
Terminal pin	BXH-001T-P0.6 or SXH-001T-P0.6

Connectors MOLEX		Housing	Terminal pin
Input connector	5289-4A	5199-04	5194
Output connector	5277-4A	5196-04	5194

dimensions in mm

LAMBDA

JWS 75 (barrier strip)
Weight 0.45 kg

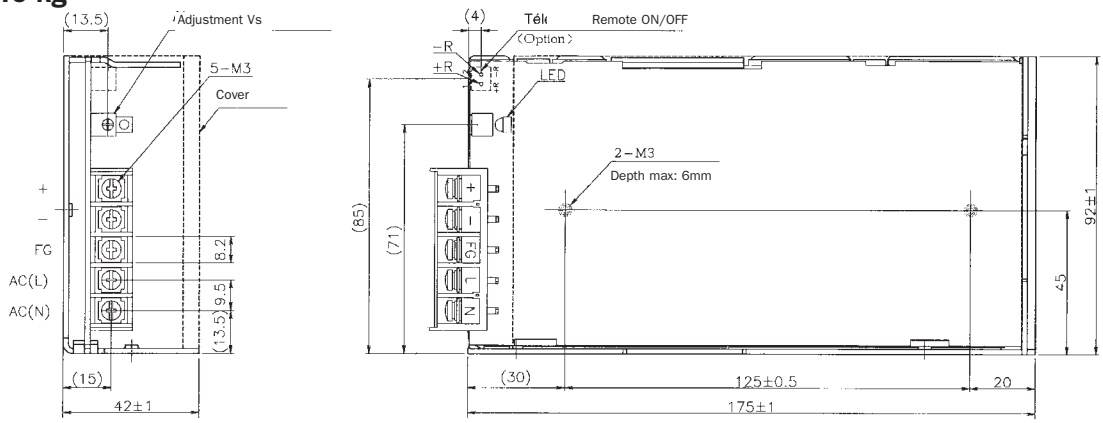

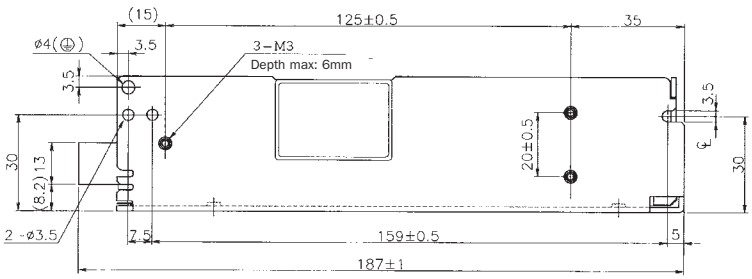

Remote ON/OFF - Connector JST	
Connector	B2B-XH-A
Housing	XHP-2
Terminal pin	BXH-001T-P0.6 or SXH-001T-P0.6

JWS 75 (molex connectors)
Weight 0.45 kg

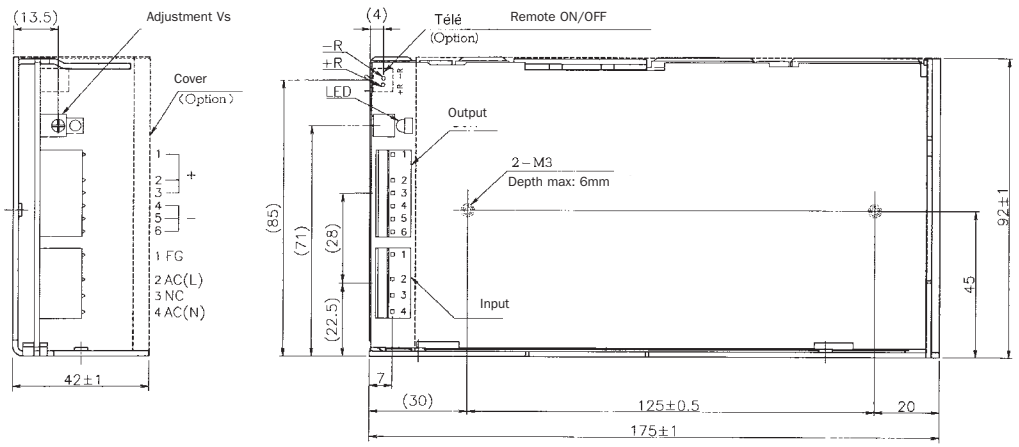

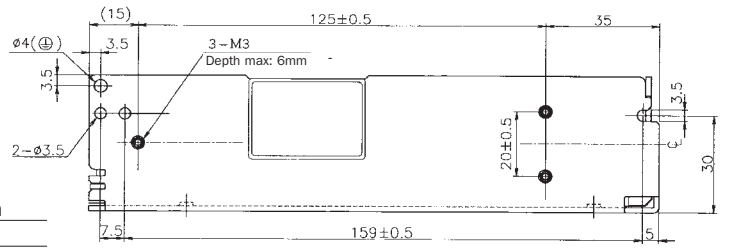

Remote ON/OFF - Connector JST	
Connector	B2B-XH-A
Housing	XHP-2
Terminal pin	BXH-001T-P0.6 or SXH-001T-P0.6

Connectors MOLEX		Housing	Terminal pin
Input connector	5289-4A	5199-04	5194
Output connector	5277-4A	5196-04	5194

dimensions in mm

JWS 100 (barrier strip)
Weight 0.65 kg

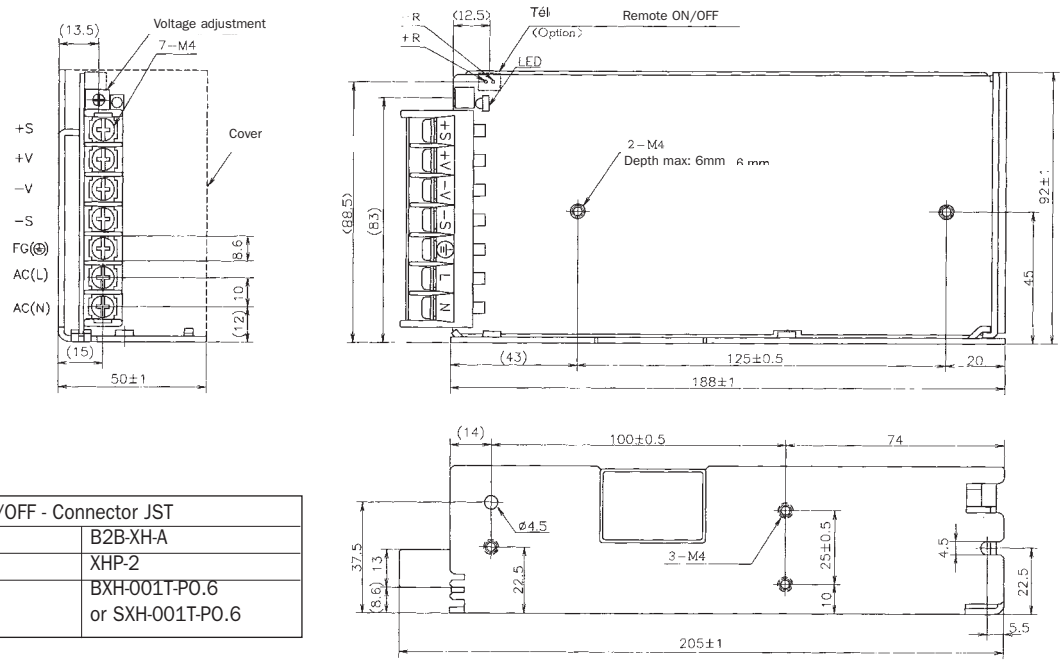

Remote ON/OFF - Connector JST	
Connector	B2B-XH-A
Housing	XHP-2
Terminal pin	BXH-001T-P0.6 or SXH-001T-P0.6

JWS 150 (barrier strip)
Weights 0.85 kg

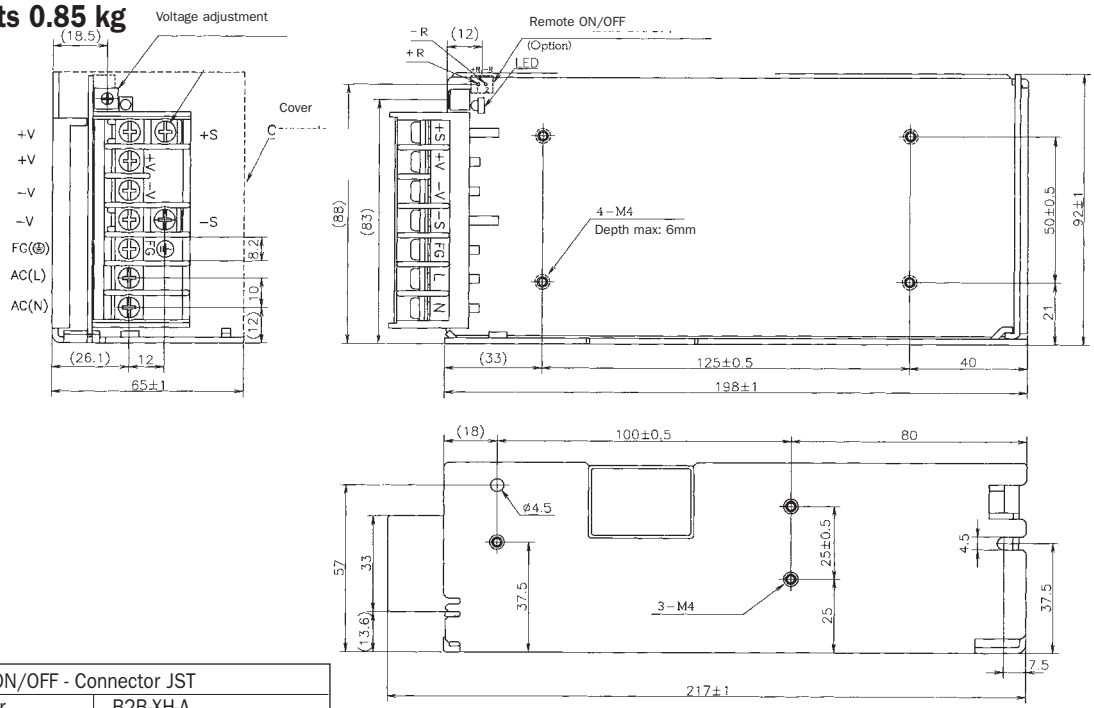

Remote ON/OFF - Connector JST	
Connector	B2B-XH-A
Housing	XHP-2
Terminal pin	BXH-001T-P0.6 or SXH-001T-P0.6

dimensions in mm

invensys LAMBDA

JWS 300
Weight 1.9 kg

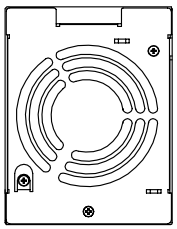

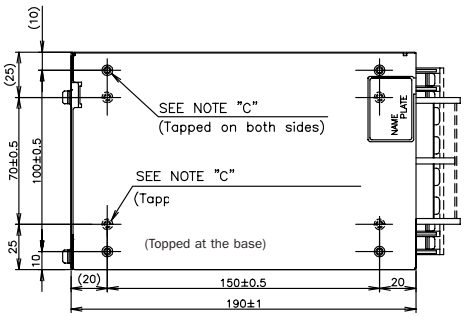

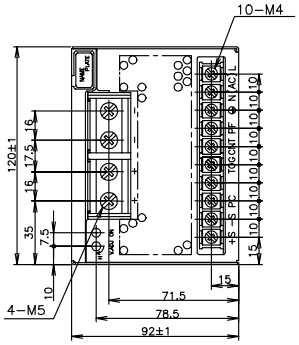

NOTES

A: Model name, nominal output voltage and maximum output current are shown here in accordance with the specifications.

B: Country of manufacture will be shown here.

C: M4 tapped holes (20) for customer chassis mounting. (Screws must not protrude into power supply by more than 6m/m .)

ACCESSORIES

* Cover for barrier terminal strip -------- 2 (Mounted on terminal strip at time of shipment)
* Metal piece for shorting TOG & CNT ---- 1 (Mounted on terminal strip at time of shipment)
* Sensing wire -------- 2 (BROWN: + , BLUE: −)

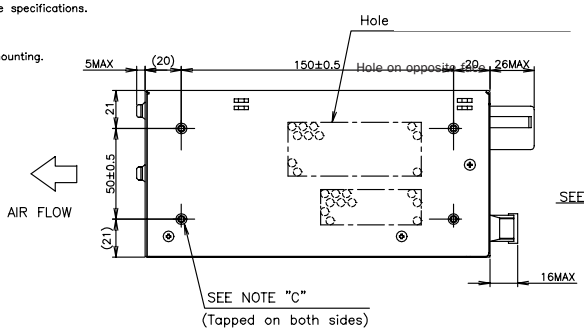

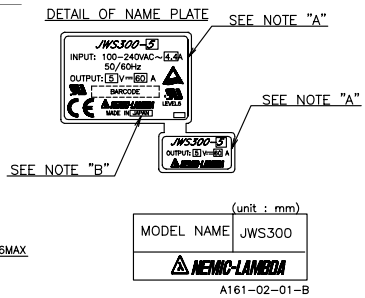

(unit : mm)

MODEL NAME	JWS300
NEMIC-LAMBDA	

A161−02−01−B

JWS 600
Weight 3.0 kg

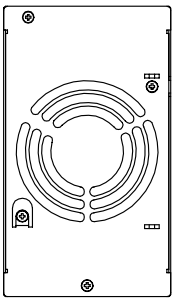

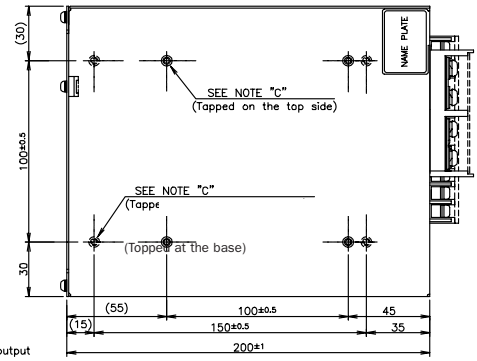

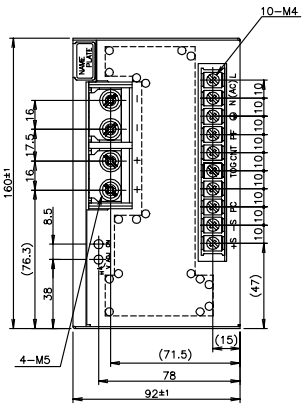

NOTES

A: Model name, nominal output voltage and maximum output current are shown here in accordance with the specifications.

B: Country of manufacture will be shown here.

C: M4 tapped holes (16) for customer chassis mounting. (Screws must not protrude into power supply by more than 6m/m .)

ACCESSORIES

* Cover for barrier terminal strip -------- 2 (Mounted on terminal strip at time of shipment)
* Metal piece for shorting TOG & CNT ---- 1 (Mounted on terminal strip at time of shipment)
* Sensing wire -------- 2 (BROWN: + , BLUE: −)

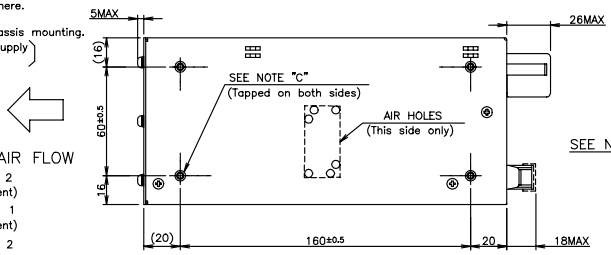

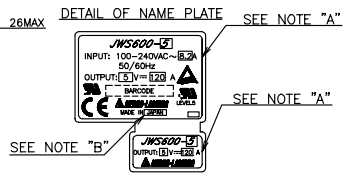

(unit : mm)

MODEL NAME	JWS600
NEMIC-LAMBDA	

A162−02−01−A

JWT 75 (molex connectors)
Weight 0.6 kg

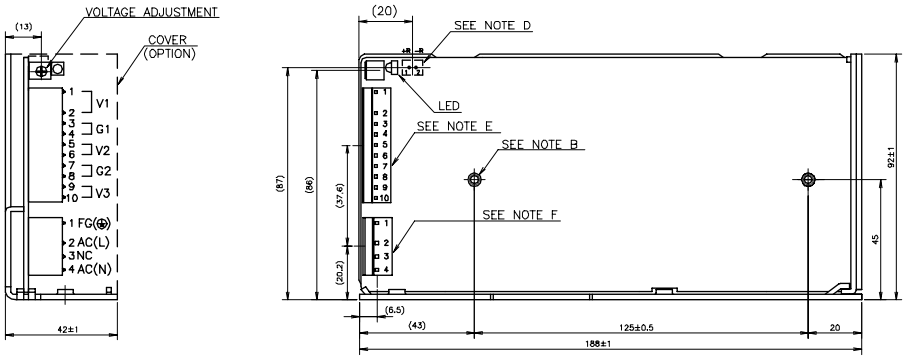

NOTES

A: MODEL NAME, OPTION, INPUT VOLTAGE RANGE, NOMINAL OUTPUT VOLTAGE, MAXIMUM OUTPUT CURRENT AND COUNTRY OF MANUFACTURE ARE SHOWN HERE IN ACCORDANCE WITH THE SPECIFICATIONS.

B: M4 EMBOSSED, TAPPED AND COUNTERSUNK HOLES (4) FOR CUSTOMER CHASSIS MOUNTING. SCREWS MUST NOT PROTRUDE INTO POWER SUPPLY BY MORE THAN 6m/m.

C: ø4.5 HOLE FOR CUSTOMER CHASSIS MOUNTING. (USE M4 MOUNTING SCREW.)

D: REMOTE ON/OFF CONTROL CONNECTOR --- OPTION B2B-XH-AM (JST)

E: CONNECTOR: 5277-10A (MOLEX)

F: CONNECTOR: 5289-4A (MOLEX)

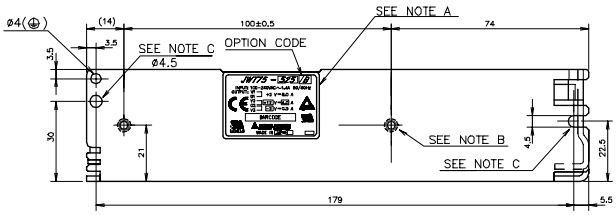

ACCESSORIES

* HOUSING: 5196-10 (MOLEX), TERMINAL: 5194PBT(MOLEX)
* HOUSING: 5199-04 (MOLEX), TERMINAL: 5194PBT(MOLEX)
* HOUSING: XHP-2 (JST), TERMINAL: BXH-001T-P0.6 (JST) OR SXH-001T-P0.6 (JST) --- OPTION

OPTIONAL MODELS

MODEL	COVER	REMOTE ON/OFF CONTOL	CONNECTOR INPUT/OUTPUT
JWT75-* /B			○
JWT75-* /C	○		○
JWT75-* /RB		○	○
JWT75-* /RC	○	○	○

(unit : mm)

MODEL NAME	JWT75/B
NEMIC-LAMBDA	

A178-02-01/B

JWT 75 (barrier strip)
Weight 0.6 kg

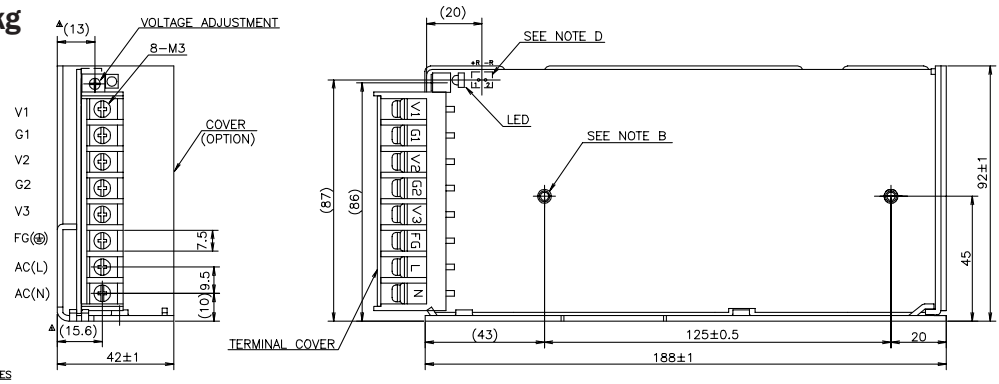

NOTES

A: MODEL NAME, OPTION, INPUT VOLTAGE RANGE, NOMINAL OUTPUT VOLTAGE, MAXIMUM OUTPUT CURRENT AND COUNTRY OF MANUFACTURE ARE SHOWN HERE IN ACCORDANCE WITH THE SPECIFICATIONS.

B: M4 EMBOSSED, TAPPED AND COUNTERSUNK HOLES (4) FOR CUSTOMER CHASSIS MOUNTING. SCREWS MUST NOT PROTRUDE INTO POWER SUPPLY BY MORE THAN 6m/m.

C: ø4.5 HOLE FOR CUSTOMER CHASSIS MOUNTING. (USE M4 MOUNTING SCREW.)

D: REMOTE ON/OFF CONTROL CONNECTOR --- OPTION B2B-XH-AM (JST)

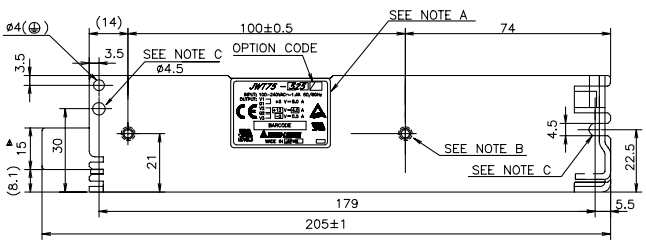

ACCESSORIES

* COVER FOR BARRIER STRIP TERMINAL
* HOUSING: XHP-2 (JST), TERMINAL: BXH-001T-P0.6 (JST) OR SXH-001T-P0.6 (JST) --- OPTION

OPTIONAL MODELS

MODEL	COVER	REMOTE ON/OFF CONTOL
JWT75-*		
JWT75-* /A	○	
JWT75-* /R		○
JWT75-* /RA	○	○

(unit : mm)

MODEL NAME	JWT75
NEMIC-LAMBDA	

A178-02-01-A

JWT 100 (molex connector)
Weight 0.72 kg

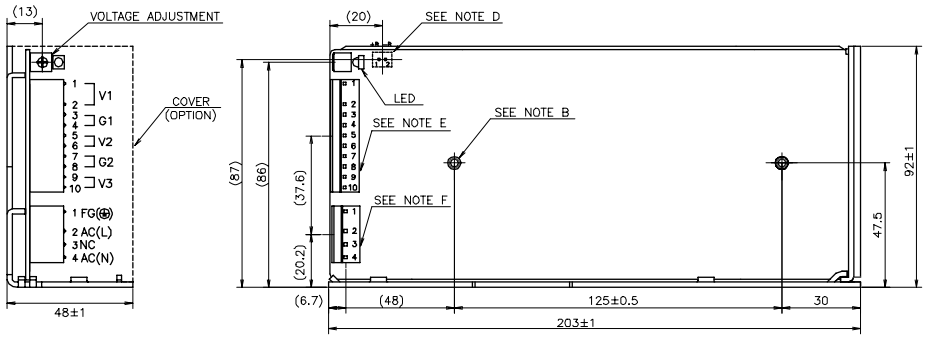

NOTES

A: MODEL NAME, OPTION, INPUT VOLTAGE RANGE, NOMINAL OUTPUT VOLTAGE, MAXIMUM OUTPUT CURRENT AND COUNTRY OF MANUFACTURE ARE SHOWN HERE IN ACCORDANCE WITH THE SPECIFICATIONS.

B: M4 EMBOSSED, TAPPED AND COUNTERSUNK HOLES (5) FOR CUSTOMER CHASSIS MOUNTING. SCREWS MUST NOT PROTRUDE INTO POWER SUPPLY BY MORE THAN 6m/m.

C: ø4.5 HOLE FOR CUSTOMER CHASSIS MOUNTING. (USE M4 MOUNTING SCREW.)

D: REMOTE ON/OFF CONTROL CONNECTOR --- OPTION B2B-XH-AM (JST)

E: CONNECTOR: 5277-10A (MOLEX)

F: CONNECTOR: 5289-4A (MOLEX)

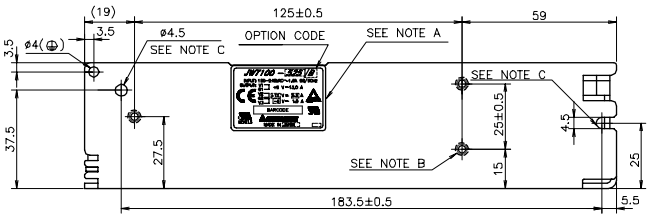

ACCESSORIES

* HOUSING: 5196-10 (MOLEX), TERMINAL: 5194PBT(MOLEX)
* HOUSING: 5199-04 (MOLEX), TERMINAL: 5194PBT(MOLEX)
* HOUSING: XHP-2 (JST), TERMINAL: BXH-001T-P0.6 (JST) OR SXH-001T-P0.6 (JST) --- OPTION

OPTIONAL MODELS

MODEL	COVER	REMOTE ON/OFF CONTOL	CONNECTOR INPUT/OUTPUT
JWT100-* /B			○
JWT100-* /C	○		○
JWT100-* /RB		○	○
JWT100-* /RC	○	○	○

(unit : mm)

MODEL NAME	JWT100/B
NEMIC-LAMBDA	

A179-02-01/B

JWT 100 (barrier strip)
Weight 0.72 kg

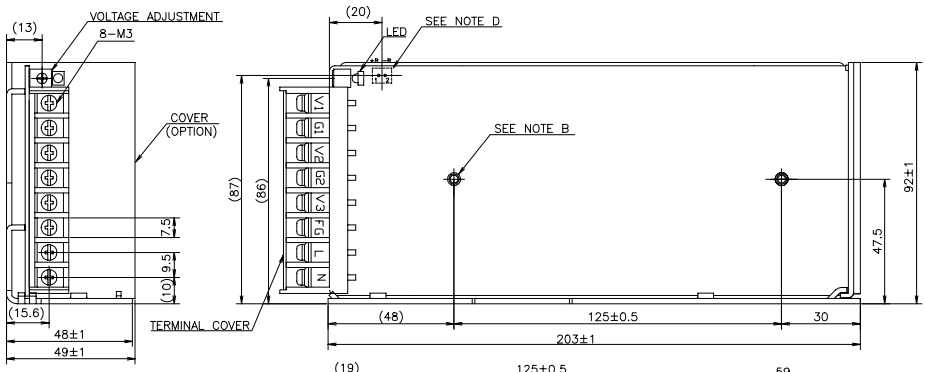

NOTES

A: MODEL NAME, OPTION, INPUT VOLTAGE RANGE, NOMINAL OUTPUT VOLTAGE, MAXIMUM OUTPUT CURRENT AND COUNTRY OF MANUFACTURE ARE SHOWN HERE IN ACCORDANCE WITH THE SPECIFICATIONS.

B: M4 EMBOSSED, TAPPED AND COUNTERSUNK HOLES (5) FOR CUSTOMER CHASSIS MOUNTING. SCREWS MUST NOT PROTRUDE INTO POWER SUPPLY BY MORE THAN 6m/m.

C: ø4.5 HOLE FOR CUSTOMER CHASSIS MOUNTING. (USE M4 MOUNTING SCREEW.)

D: REMOTE ON/OFF CONTROL CONNECTOR --- OPTION B2B-XH-AM (JST)

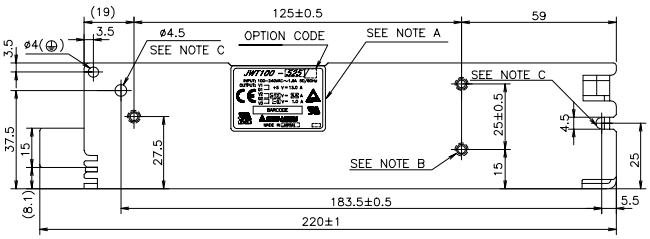

ACCESSORIES

* COVER FOR BARRIER STRIP TERMINAL
* HOUSING: XHP-2 (JST), TERMINAL: BXH-001T-P0.6 (JST) OR SXH-001T-P0.6 (JST) --- OPTION

OPTIONAL MODELS

MODEL	COVER	REMOTE ON/OFF CONTOL
JWT100-*		
JWT100-* /A	○	
JWT100-* /R		○
JWT100-* /RA	○	○

(unit : mm)

MODEL NAME	JWT100
NEMIC-LAMBDA	

A179-02-01-B