TEST & MEASUREMENT

Mass InterConnect Solutions

...creating order out of wiring chaos.

VPC Virginia Panel Corporation

PRODUCT CATALOG

Mass InterConnect Solutions

...creating order out of wiring chaos

VPC offers over 55 years of unparalleled experience and expertise in the field of Mass InterConnect solutions. Our commitment to uncompromising quality, commitment to continual improvement, and exceptional value means you can rest assured our products receive the rigorous and expedient testing you demand.

Used by test and measurement professionals in the fields of defense, aerospace, automotive, medical, and more, VPC provides the critical connection between the tester and the unit under test (UUT). By using a receiver on the tester side and mating it with an interchangeable test adapter (ITA), our modular and scalable solutions allow multiple types of I/O to be easily mated at one time, simplifying the test process.

Why VPC?

- Protect and extend the life of expensive test equipment
- Increase throughput by quickly and easily adapting tester to multiple UUTs
- Both standard and customized solutions to meet your specific needs
- A dedicated team of engineers to help you design and meet your system requirements
- Simplified cable and patchcord management
- Wiring configuration for virtually any type of test and measurement instrumentation

Table of contents

Introduction to Mass InterConnect

Mass InterConnect Overview 2
Wire+ Advantage and Online Configurators 6
Applications 10

Products

Snap-In-Modular (SIM) Solutions 16
iSeries 28
G2, G6, and G10 Solutions 74
S6, G12, and G12x Platform Solutions 96
G18 Solutions 114
Pull-Thru Solutions 124
9025 and 9050 Solutions 146
Additional Accessories 174
Contacts, Modules, and Tools 178

- SIM Signal 180
- QuadraPaddle Signal 184
- TriPaddle Signal 198
- Mini Power 210
- Mini Coaxial 213
- Micro Power 226
- Micro Coaxial 227
- High Power 237
- High Frequency Coaxial 240
- Thermocouple 255
- Fiber Optic 259
- Pneumatic 261
- Vacuum 264

Technical Information

Cable Management 267
Cross Reference 270
Index 280

ISO 9001:2008 FM 91006

"Virginia Panel Corporation, through its people, is focused on enhancing customer satisfaction through our commitment to continual improvement, uncompromising quality, and exceptional value."

Full Scale Solutions

with small to large InterConnects.

Small Connectors

- Small connector options include: i1, i2 Micro, i2 MX, iCon, iCon Signal and Hybrid, and iCon960
- Spring-loaded locking tabs ensure secure engagement
- PCB-mounting capabilities
- Rugged engagement mechanisms engineered for over 10,000 mating cycles

Compact, High Density Solutions

- Two, six, and 10 module solutions offer a mix of I/O options
- Mounting options include Vertical Hinged Mounting Frames, panel mounts, or slide mounts
- Keying pins, built-in cable clamps, and removable backshells ensure ease of use

Large Scale Systems

- 18 to 75 module solutions
- Slide mount variations available
- Platforms available on 20, 25, and 50 module receivers

Scalable Solutions for Multiple Applications

Our test systems are available in small, medium, or large formats to fit needs based on budget, footprint size, or I/O requirements. As demand has increased for smaller test systems with small format ITAs, our engineers have designed solutions with compatibility in mind.

Our Mass InterConnects are fully scalable. Should you purchase a cable assembly ITA today, you can continue to use them in your system even after you upgrade to larger systems to accommodate more I/O.

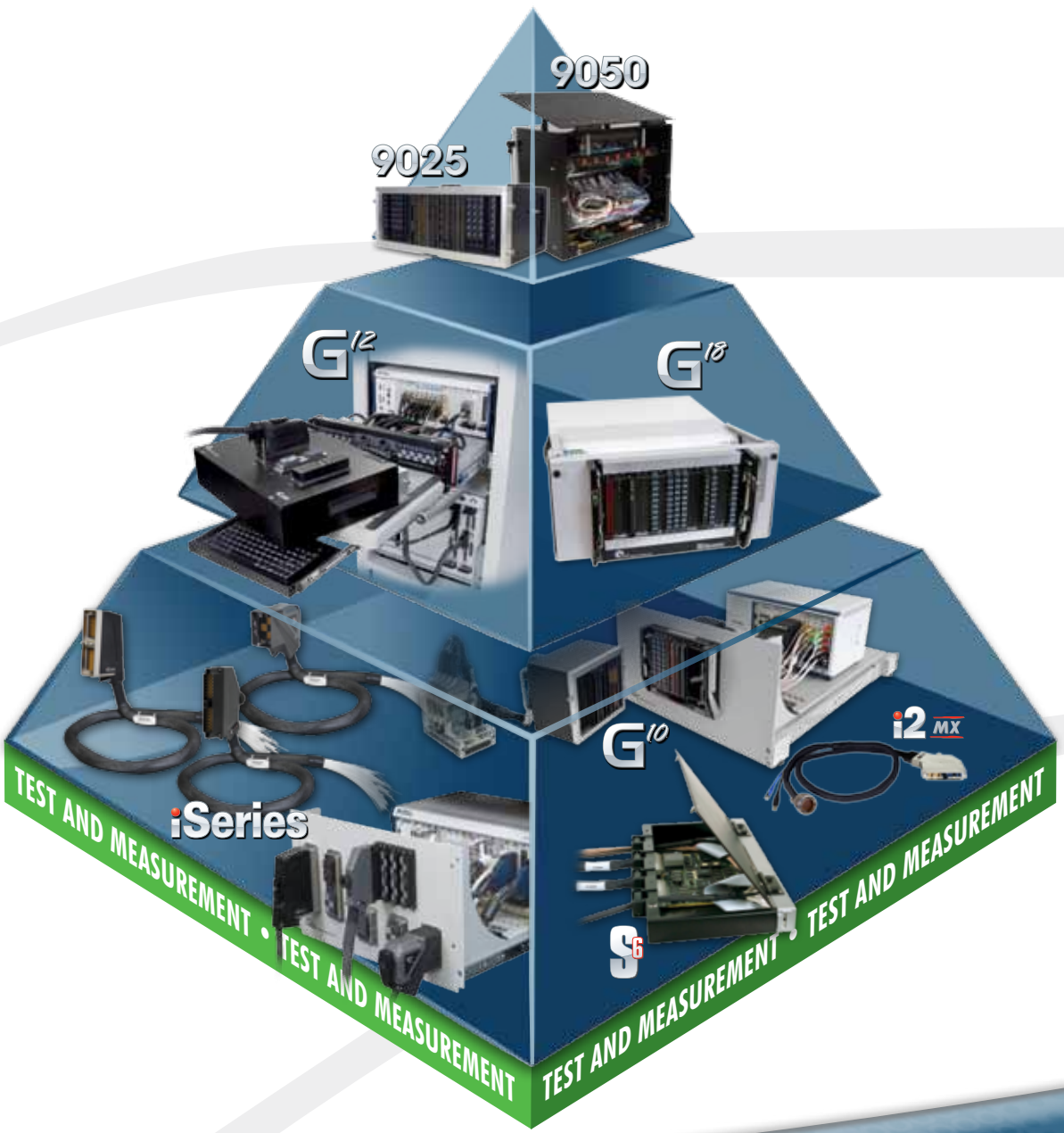

Features & Benefits of Using Mass InterConnect

90 Series Receiver and Receiver Modules: A rugged InterConnect mechanism to connect to test instrumentation. Mates to the ITA frame and modules. **vpc.com/modules**

90 Series ITA and ITA Modules: Mates to the receiver and houses modules, PCB adapters, cable assemblies, and patchcords for connection to the UUT. **vpc.com/modules**

iSeries Receiver Cable Assemblies: iSeries receivers connect to standard 90 Series modules in the 90 Series ITA. **vpc.com/iSeries**

iSeries Receiver Connectors: Mount to either an ITA enclosure or rack panel for secondary or primary test connections. **vpc.com/iSeries**

iSeries Interchangeable Test Adapter (ITA) Connectors: Connect to the iSeries receiver connectors. ITA cable assemblies house wiring within the connector to protect and provide strain relief. **vpc.com/iSeries**

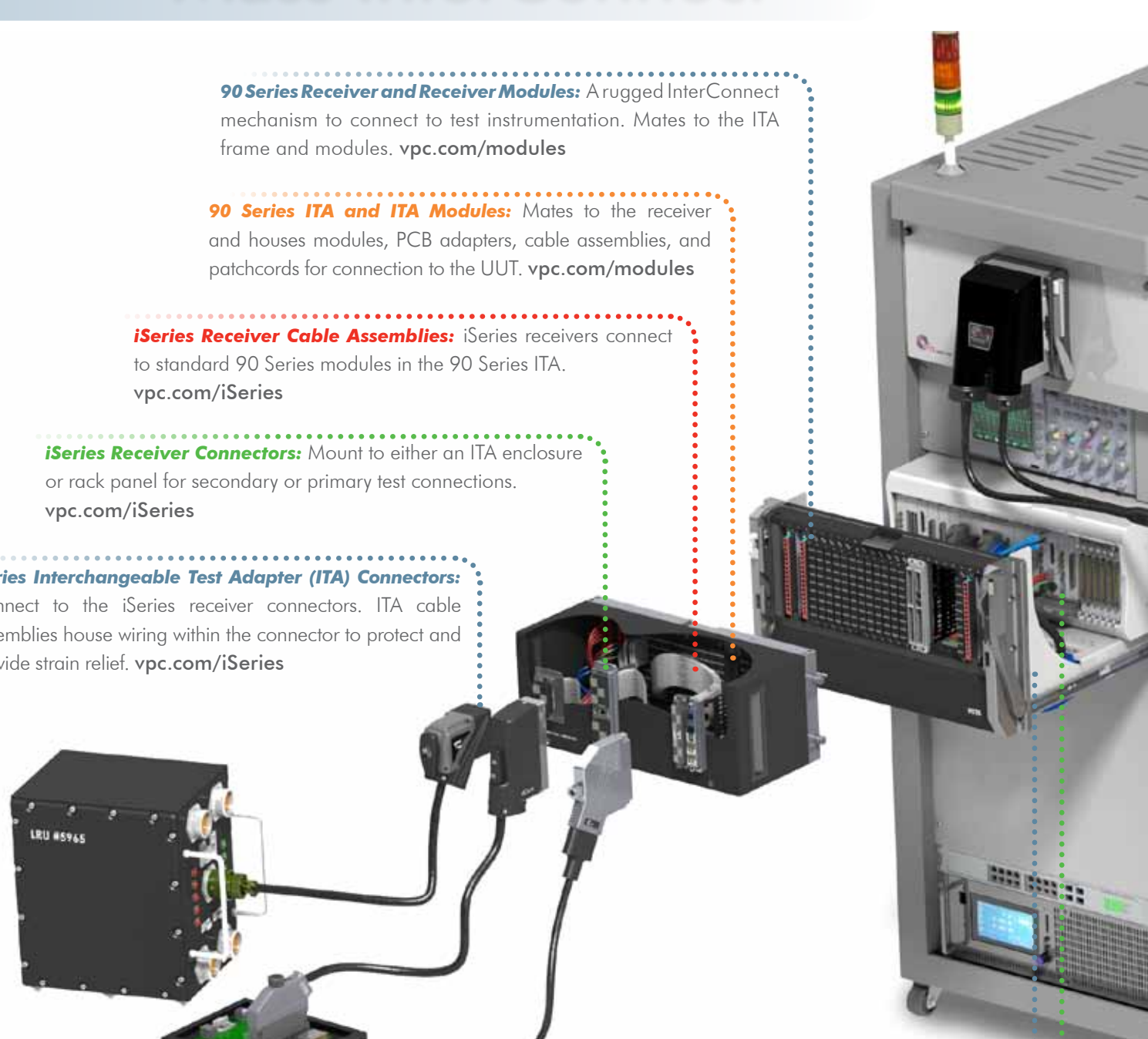

Mounting Options: VPC provides three types of mounting options to allow for easy access to test instrumentation: fixed mounting, Vertical Hinged Mounting Frame, and slide mounting. **vpc.com/mounting**

Unit Under Test (UUT): Connect directly to your UUT using secondary VPC connectors or direct connections with custom designed enclosures. **vpc.com/cables**

Instrument Card Solutions: Using our *Wire+ Configurator* find over 3,000 pre-engineered cable assemblies and InterConnect adapters supporting hundreds of PXI, LXI, and VXI instrument cards. **vpc.com/wire_plus/configurator**

Standard and Custom ITA Enclosures: Our in-house wiring team and product design engineers can build and assemble complete discrete-wired enclosures. Custom options include cut-outs, screening, and specialty hinges and covers. **vpc.com/enclosures**

90 Series Tabletop: The tabletop configuration allows the S6, G12 (shown), and 9025 to be mounted to any horizontal surface. **vpc.com/G12/tabletop**

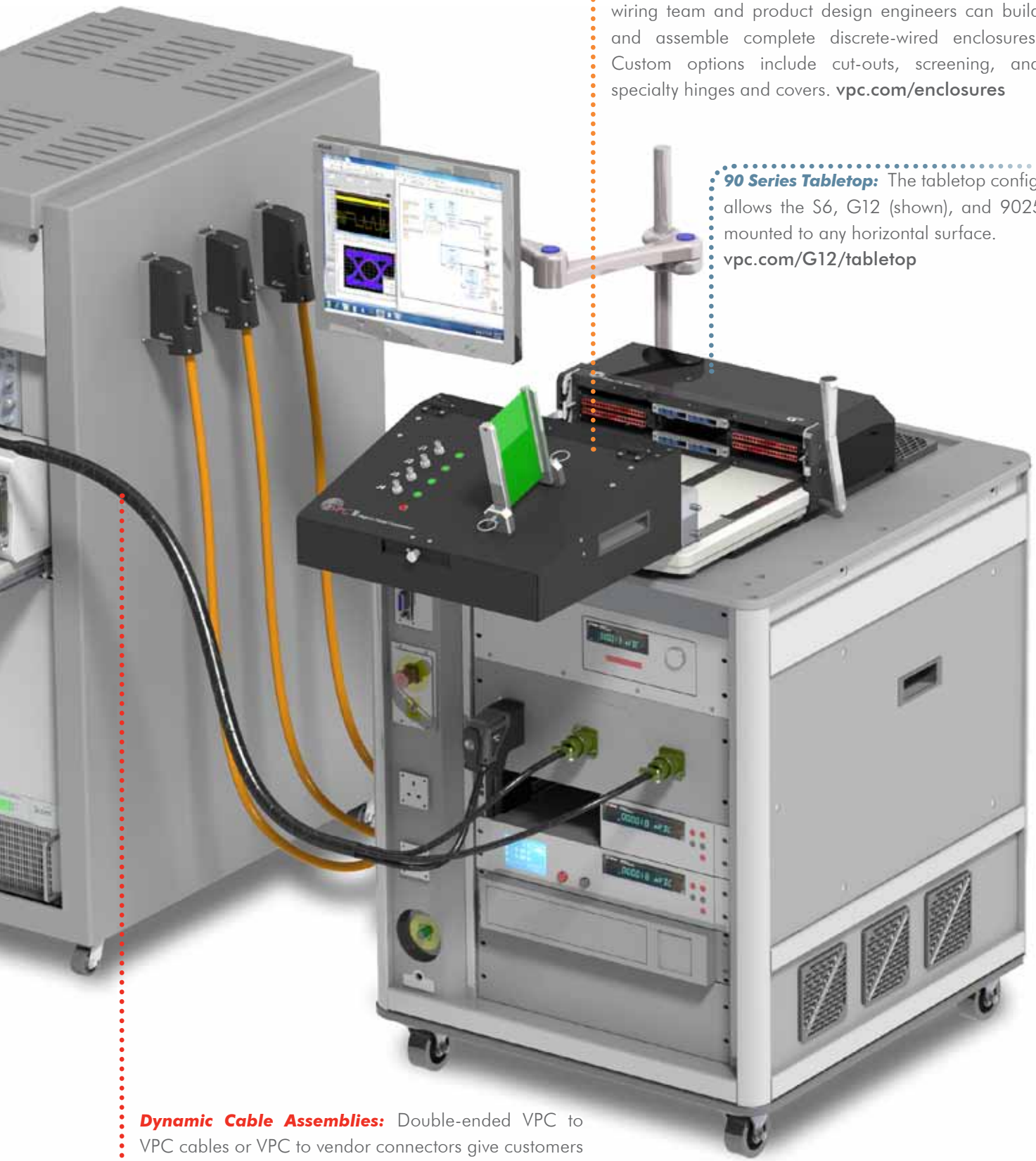

Dynamic Cable Assemblies: Double-ended VPC to VPC cables or VPC to vendor connectors give customers a full range of cable solutions. **vpc.com/cables**

Wiring Capabilities
with quality and precision.

UNCOMPROMISED QUALITY

& CONTINUAL IMPROVEMENT

EXCEPTIONAL VALUE

VPC is an ISO 9001:2008 certified business, reinforcing VPC's dedication to operating a Quality Management System. VPC manufacturing and engineering personnel undergo in-house training programs, including blueprint reading, GD&T, crimping, assembly, etc.

ISO 9001:2008 FM 91006

VPC is an IPC member in good standing. All wiring assemblers are trained to comply with soldering and inspection per IPC J-STD-001. VPC complies with IPC/WHMA-A-620 with in-house certified IPC trainers and all assemblers having IPC-620A application specialist certification. VPC is capable of producing to all IPC classes (Classes 1, 2 and 3) depending on the customer's requirements.

The VPC Quality Assurance (QA) Lab conducts tests for point-to-point continuity, shorts, and insulation resistance to ensure the final product meets both your and VPC's high quality standards. The QA Lab's automated equipment uses our flagship tester, the CableTest MPT-5000. In addition, VPC's network analyzer tests the electrical response of RF cables to a specified frequency range.

Visit **vpc.com/support/compliance** for more information.

Dedicated to provide solutions across multiple standards

PXI LXI VXI bus

VPC's **Wire+ Advantage** provides engineered, finished, and quality tested cable assemblies. This enables easier system configuration, promoting integration of your Mass InterConnect system with virtually any type of test and measurement instrumentation. Whether you need discrete-wired cable assemblies, innovative PCB adapter cards, wired adapters, or our wired enclosures, VPC has a solution for your testing needs. ***Wire+*** offers convenient "plug and play" capability for rapid configuration of your system.

VPC's state of the art wire-strippers, crimpers, and cutters speed production. Our combination stripper and crimper enables consistent, efficient,and reliable terminations. Automated quality machinery reduces test and validation time while ensuring you receive a quality product.

Visit vpc.com/wire

CONNECTED ORDER
creating order out of wiring chaos

Online Configurators

VPC's online configuration tools enable you to design and configure your complete test and measurement solution. Choose from designing patchcords, configuring cable assemblies, PCB adapters, or a complete Mass InterConnect solution. We have made it easy to find the right part numbers you will need to make your connections.

Visit vpc.com/configurators

InterConnect Designer
vpc.com/interconnectdesigner

PATCHCORD designer
vpc.com/patchcorddesigner

Wire+ Configurator
vpc.com/wire_plus/configurator

Create Systems Online
with online configurators.

Patchcord Designer

Patchcord Designer lets you create a variety of patchcords in one easy-to-use tool. Simply select the VPC contact and wire, the terminating contact and wire, and the wire length and the designer generates the part number, specifications, and a detailed drawing for your patchcord. Alternatively, if you know the part number or would like to look up the wire or contact by its description, these features are available. To access our Patchcord Designer, please visit ***vpc.com/patchcorddesigner***

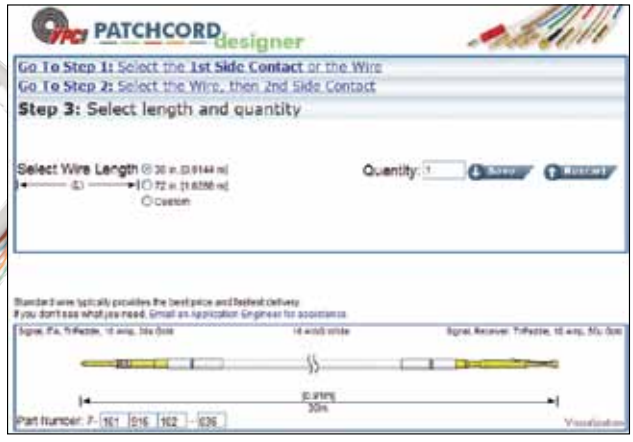

Explore the possibilities!

- Create your custom patchcord
- View product details
- Download a customized drawing instantly

Wire+ Configurator

Wire+ Configurator allows you to save time and money by providing a quick connection of cable assemblies and InterConnect adapters to your receiver. The configurator supports over 3000 PXI, VXI, and LXI cards and PXI, VXI, LXI, and PCI instrumentation.

To access our Wire+ Configurator, please visit ***vpc.com/wire_plus/configurator***

InterConnect Designer

With the InterConnect Designer, you can build a complete InterConnect solution from start to finish. The designer allows you to submit a request for configuration to your local Field Application Engineer and collaborate using your MyVPC account.

To access our InterConnect Designer, please visit ***vpc.com/interconnectdesigner***

FEATURES AND BENEFITS

- Standardizes the format of communication
- Shows both the horizontal and vertical relationships
- Generates real-time configurations with VPC engineering updates
- Provides quick information using VPC's Product Information Window (PIW)
- Request a quote with the click of a button
- Attaches to a MyVPC project for easy collaboration
- Downloads to Excel template to enable offline sharing
- Streamlines your wiring request and reduces testing with VPC's wiring template

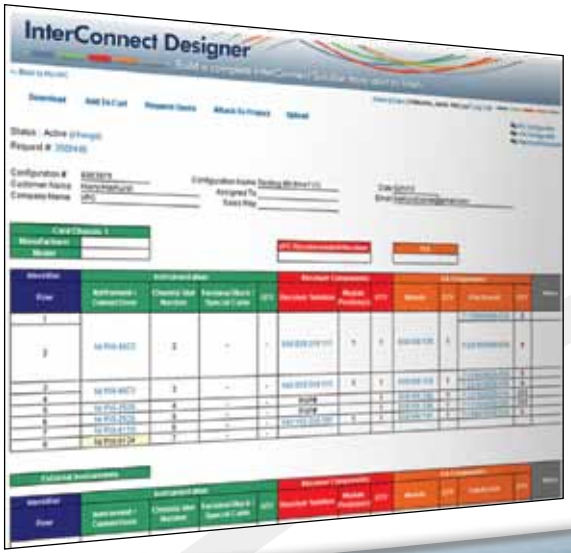

View Your Configuration

Through your account on MyVPC, you can organize and display your configuration, communicate with your application engineer and local sales team member, and view your configuration. You can also attach your configuration to your secure MyVPC project and easily request a quote.

Applications

VPC continuously develops new products to meet the needs of the test and measurement industry. We take great pride in offering reliable, economic solutions to organize your connections in modular and scalable configurations that can adapt to your changing test requirements.

VPC welcomes all application articles and thanks those that have allowed VPC to highlight today's test technology. Visit **vpc.com** for more applications.

Department of Astronomy at Ohio State University • iCon

The Multi-Object Double Spectrographs (MODS) group at Ohio State University's Department of Astronomy integrated VPC's **iCon** into MODS1, the spectrograph for the left Gregorian focal station of the world's largest optical telescope, the Large Binocular Telescope (LBT). **iCon** had to be operational in the telescope dome environment, in ambient temperatures range from -28° C to 28° C (not factoring for humidity).

The LBT is comprised of two 27.5 foot wide mirrors built into a single mount. The mirrors operate in conjunction with two MODS. Scientists use the LBT and MODS to analyze the distance, physical conditions, and chemical makeup of the most distant stars and galaxies.

Because of the extreme environmental conditions, including elevation and high wind speeds, as well as the need for very low EMF noise operation, commercial-off-the-shelf electrical components were not an option. The **iCon** had exceeded the engineers' requirements, and surpassed the specifications for the spectrograph's signal-to-noise ratio.

www.astronomy.ohio-state.edu/MODS/index.html

Applications

ARC Technology Solutions • G12 Solution • Test and Measurement

ARC's Mixed Signal Automated Test (MSAT) system highlights the latest in cost effective, high performance automated test equipment, yields a reduced test development time, and lowers the cost of ownership. The MSAT is a highly integrated test system incorporating ARC's CID and VIPERION test products, along with a combination of VPC, National Instruments PXI, and other commercial-off-the-shelf test and measurement equipment. ARC has chosen VPC's **G12** receiver for the MSAT system due to its ability to interconnect to a variety of devices while offering a sturdy, reliable interface. Additionally, ARC's VIPERION High Speed Digital Testers connect directly to the **G12's** QuadraPaddle connectors allowing for optimal testing conditions directly at the unit under test's (UUT's) connection to the MSAT. The VPC **G12** incorporated into ARC's MSAT is currently fielded at several government and commercial locations supporting critical items for the aviation and defense sector.

ARC Technology Solutions is a leading provider of technical solutions including test system design and integration for many industries.

www.arcserv.com

Cobham • iConEMI • Test and Measurement

Cobham uses VPC's **iConEMI** connector in its Multimedia Test System (MMTS). The MMTS is a fully-integrated measurement system that significantly reduces test time for multimedia-capable devices such as DVD players, mobile devices, computers, and video game consoles. The MMTS is designed to be an all-in-one system that eliminates the need for stand-alone measurement devices.

The MMTS delivers all the measurement hardware and software necessary for testing the most common video and audio signals and digital protocols. It can efficiently test up to four multimedia devices in parallel, using VPC's **iConEMI**, maximizing testing throughput without sacrificing the quality or the speed of measurements.

Cobham engineers chose VPC's **iConEMI** connector for the electromagnetic interference (EMI) protection it provides with its earth-ground terminal, VPC's "mate first, break last" feature.

Cobham is a global leader in avionics, communications and synthetic test, monitoring and control for commercial and military applications.

www.cobham.com

Applications

Bloomy • i1 • Industrial Electronics Manufacturing

Bloomy uses VPC's **i1** connector in its compactUTS (cUTS) to automate mixed-signal functional tests (FCT) for assemblies in electronics manufacturing environments. The cUTS is a cost-effective platform for automating manual tests of devices with fewer than 50 cable-accessible test points in manufacturing environments with moderate production volume. Powered by National Instruments USB instrumentation, the **i1** connector and Bloomy's power control and switch matrix electronics, the cUTS makes changeover quick and easy.

Units under test (UUTs) by the cUTS are connected via cable or a cable/interface test adapter (ITA). Each cable uses an electrically keyed **i1** connector with internal configuration jumpers and leads connecting to test points on the UUT and/or ITA. A Self-test Suite is available that uses a specially-configured **i1** to switch through to the Mass InterConnect, assuring the proper functioning of the cUTS in daily test operations.

Bloomy is a leader in automated test, data acquisition, and control systems.

www.bloomy.com

JGB Consulting• iCon • Manufacturing

JGB engineers have integrated VPC's **iCon**connector into their Hoist ATE. The Hoist tester is designed to test an d verify the functionality of various hoist models built at a manufacturing/repair facility.

The Hoist ATE utilizes the **iCon** connector to connect one of the 38 Hoists (eight different families) to be tested. The **iCon** connects high power and high current, as well as digital signaling to the hoist.

Each **iCon** cable has a memory pin which uniquely identifies the connected unit. The tester senses it on contact and automatically loads the correct software to run, making it fool-proof for the operator.

JGB Consulting is an automated test equipment integrator headquartered in Point Pleasant, New Jersey. JGB designs commercial-off-the-shelf automated test systems and test software.

www.jgbconsulting.com

Applications

Aeroflex • i2 Micro iCon • Defense

Aeroflex integrated VPC's **i2 Micro iCon connector** in a contract with the U.S. Marine Corps to supply Ground Radio Maintenance Automatic Test Systems (GRMATS). The Aeroflex 7200 Configurable Automated Test Set (CATS) provides flexible and scalable test instrumentation in a complete radio test system.

Aeroflex engineers chose VPC's **i2 Micro iCon** as the 7200 CATS connector interface to the units under test (UUTs) due to its ability to meet the .80" profile requirement, 168 signal pin high-density with PCB connection capability, and tested reliability.

Per the announced U.S. Marine Corps contract, the test platform has been adopted for testing new digital and legacy radio systems. In addition to testing software-defined radios and modules, the portable 7200 CATS platform can test radar, avionics, and other devices in a dramatically reduced footprint with the **i2 Micro iCon** connector.

Aeroflex, a Cobham Company, is a global provider of test and measurement equipment used by companies in the space, avionics, defense, commercial, and medical markets.

www.aeroflex.com

NOFFZ • iCon • Automotive

The UTP 9065 is used for parallel inline testing of up to 28 different automotive Emergency Call (eCall) modules simultaneously in a climate chamber. This requires equipment that is modular, mobile, and scalable. The UTP 9065 uses VPC's **iCon** connector, making it possible to conduct various performance, communications, and functional tests with the easy engage/disengage mechanism, while allowing operators to replace device testers for a new test series with minimal time loss.

The standard version of the UTP 9065 includes a server, a touch panel control unit, and 10 test cells for inline testing. It can also be upgraded as a completely automated inline tester system. Future enhancements include the incorporation of VPC's **SIM VTAC High Speed Data (HSD)** inserts.

NOFFZ ComputerTechnik GmbH, headquartered in Germany, has focused on fast and flexible solutions for automated test systems for over 20 years. As a leading supplier of automotive communication technologies, including complex internet connections, navigation systems, assist services, and the legally required eCall, NOFFZ requires sophisticated and rugged testing equipment.

www.noffz.com

Applications

Hiller Measurements • 9025, G6, iCon • Automotive

VPC's **9025, G6,** and, **iCon** interfaces allow Hiller Measurement's automobile customers to create custom, configurable test systems with commericial-off-the-shelf components and standard test interfaces. These benefits reduce time and costs, while providing the expected quality and reliability of high-end automobile manufacturers.

Headquartered in Austin, Texas, Hiller Measurements is a family-owned company that designs testing systems for the automotive industry. With over 60 years of test system design expertise, the partners of Hiller Measurements have designed systems used by several premium automobile manufacturers. Hiller Measurements has also designed test systems for satellite communications, avionics, radar systems, and medical devices.

www.hillermeas.com

CableTest • iCon • Aerospace

The CableTest Systems MPT Wiring Analyzer is used for testing complex electrical interconnect sub-systems manufactured by a major Airbus supplier on the A350 XWB program. The MPT tester uses a combination of standard rack mount instruments and CableTest high voltage/high current sources and switching, all connected with VPC's **iCon** connector. The MPT tester and VPC's interface support voltages up to 4000VDC and up to 7 amps.

The **iCon** connector allows test operators to use common interface cables and test set-up for continuity, dielectric, and functional tests on the various interconnect systems (harnesses, motherboards, black boxes). By standardizing with the **iCon**, CableTest was able to create a high-quality, configurable test system that could be shared at multiple sites.

CableTest Systems Inc, has designed and manufactured electrical interconnect test equipment for more than 20 years. Its world-class ATE solutions are used globally by industry leaders including Bombardier, Boeing, Goodrich, Honeywell, Lockheed Martin, Moog, and Parker.

www.cabletest.com/en

Applications

Robins Air Force Base • iCon, 9050 VXI • Defense

Test engineers at Robins Air Force Base have used VPC's **9050 VXI** with an L-shaped enclosure and **iCon** secondary connector in the Versatile Depot Automatic Test Station—Digital Analog version 2 (VDATS DA-2). In this application, the **iCon** connector is used to automatically test avionics circuit cards for the F15 fighter APG-63 system.

The **9050 VXI** receiver and interface test adapter (ITA) form the backbone of the tester. With a common I/O pin map, any number of groups can develop ITAs and Test Program Sets to utilize the VDATS tester, simplifying testing and procurement. VPC's L-shaped enclosure design is ideal for testing circuit cards because it allows the card to be mounted on a horizontal surface to prevent damage. One of the greatest challenges of the design for the ITA was to find the ideal connector for the unit under test (UUT). The ITA requires 308 electrical connections. The plan called for the use of 50 Ohm coaxial wire utilizing wire wrap, but the test engineers also wanted the option to use crimp technology if needed. Ease and speed of installation and removal was a high priority, as technicians would need to engage and disengage the connecting assembly frequently.

The test engineers chose VPC's **iCon** connector due to its extreme versatility; the connector offers a wide range of pin configuration and termination types. **iCon's** low insertion force and simple secure locking mechanism makes it one of the simplest connectors for technicians to install and remove. The project team also found VPC's support beneficial. During manufacturing, the project schedule began to experience delays. The project group turned to VPC to pre-wire their **iCon**, which enabled them to get back on schedule.

www.robins.af.mil

Snap-In-Modular Solutions
with SIM Technology.

What is SIM Technology?

The Snap-In-Modular (SIM) insert is a proprietary snap-in technology that uses latches to anchor the insert to a SIM module. The inserts for SIM VTAC High Speed Data (HSD), SIM QuadraPaddle, and SIM VTAC Right Angle are each interchangeable in 90 Series SIM modules and i2 MX connectors.

Whether you are using patchcords or custom PCBs in your solution, SIM inserts provide the opportunity to use HSD contacts in broadband applications.

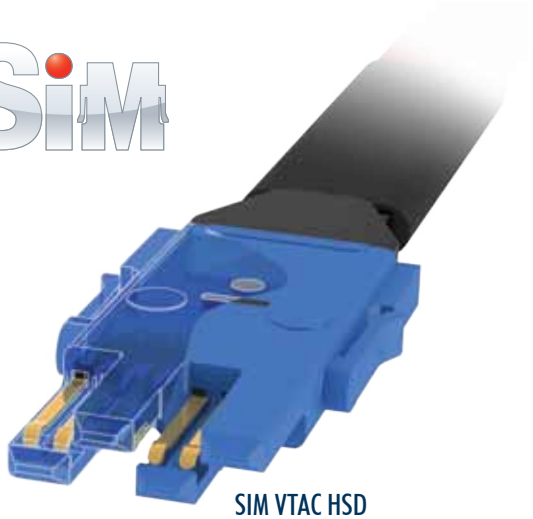

SIM VTAC HSD

10+ Gbps

High Speed PCB Connections

The SIM VTAC HSD also comes in a right angle PCB configuration, the SIM VTAC Right Angle insert. It is ideal for a variety of applications that require a wireless solution for your project.

SIM VTAC Right Angle is sold as part of a kit to help connect custom PCBs to a 90 Series receiver module or i2 MX ITA. These contacts are capable of data transfer rates of more than 10 Gbps.

Useful Applications

SIM VTAC Right Angle are ideal for Pull-Thru applications. Connecting your PCB to your ITA, you can harness the speeds required for rapid data acquisition.

Due to the design of the SIM VTAC Right Angle, you can still configure your ITA to use patchcords since the right angle inserts only consume a fraction of a traditional PCB adapter.

SIM QuadraPaddle Options

Not every application requires high speed data transfer. We also offer a SIM QuadraPaddle insert for signal or lower speed applications. You can outfit an i2 MX and 90 Series with both high and low speed, giving you increased scalability and versatility to meet any project's needs.

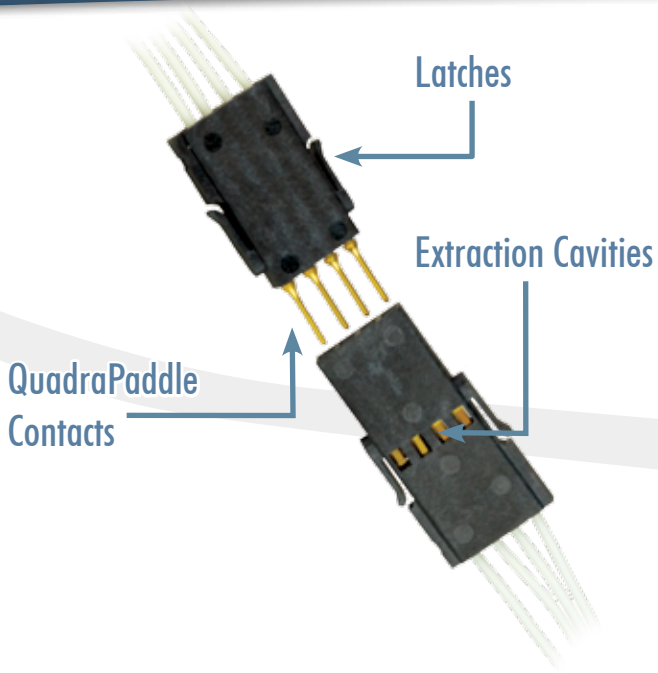

90 Series

Use SIM Anywhere You Use VTAC HSD

The added variety of contacts give you more options to leverage high speed technology in your solution.

The 90 Series SIM modules have 34 positions available to accept SIM VTAC HSD, SIM VTAC Right Angle, or SIM QuadraPaddle. Alternatively, the i2 MX connectors have 22 positions available for solutions where a smaller footprint is required.

Compatible with COTS Connectors

Whether you choose patchcords or right angle inserts for a PCB solution, all SIM inserts are compatible with commercial-off-the-shelf (COTS) connectors, including:

- USB 3.0
- HDMI
- Mini-SAS HD
- RJ45
- VHDCI
- RosenbergerHSD
- DVI
- SATA
- QSFP
- InfiniBand

SIM Technology

Each of the Snap-In-Modular (SIM) inserts share the same footprint, which makes them all compatible with our i2 MX connector and 90 Series SIM modules. The added compatibility means more options to intermix insert types within a single module and to conduct tests at a range of signal speeds.

Features and Benefits

- Stackable I/O in a small footprint
- Transfer data at speeds more than 10 Gbps (12.5+ Gbps with patchcords)
- Precision-welded patchcords and PCB configuration eliminates signal crosstalk from other contacts and ensures signal integrity
- Opportunity to use both patchcords and custom PCBs in the same solution
- Easy to remove contacts to allow for trouble-shooting

SIM VTAC HSD

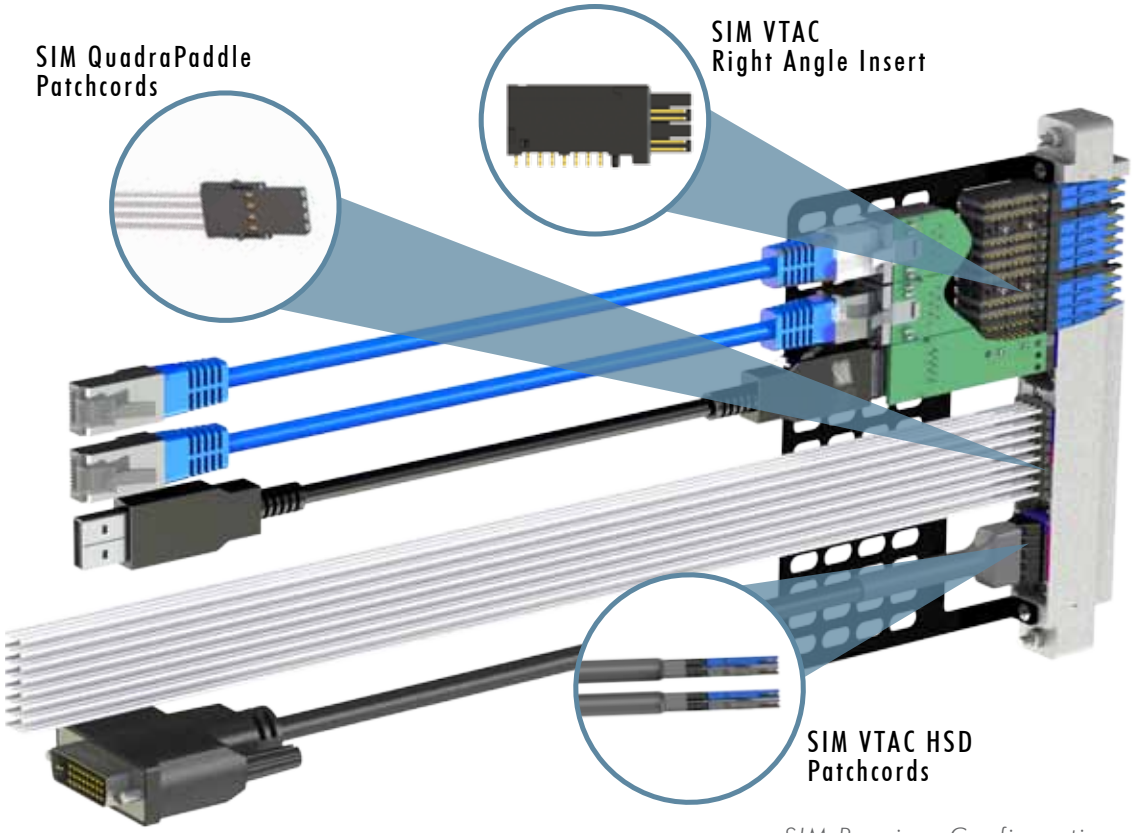

SIM Receiver Configuration

SIM 90 Series Configuration

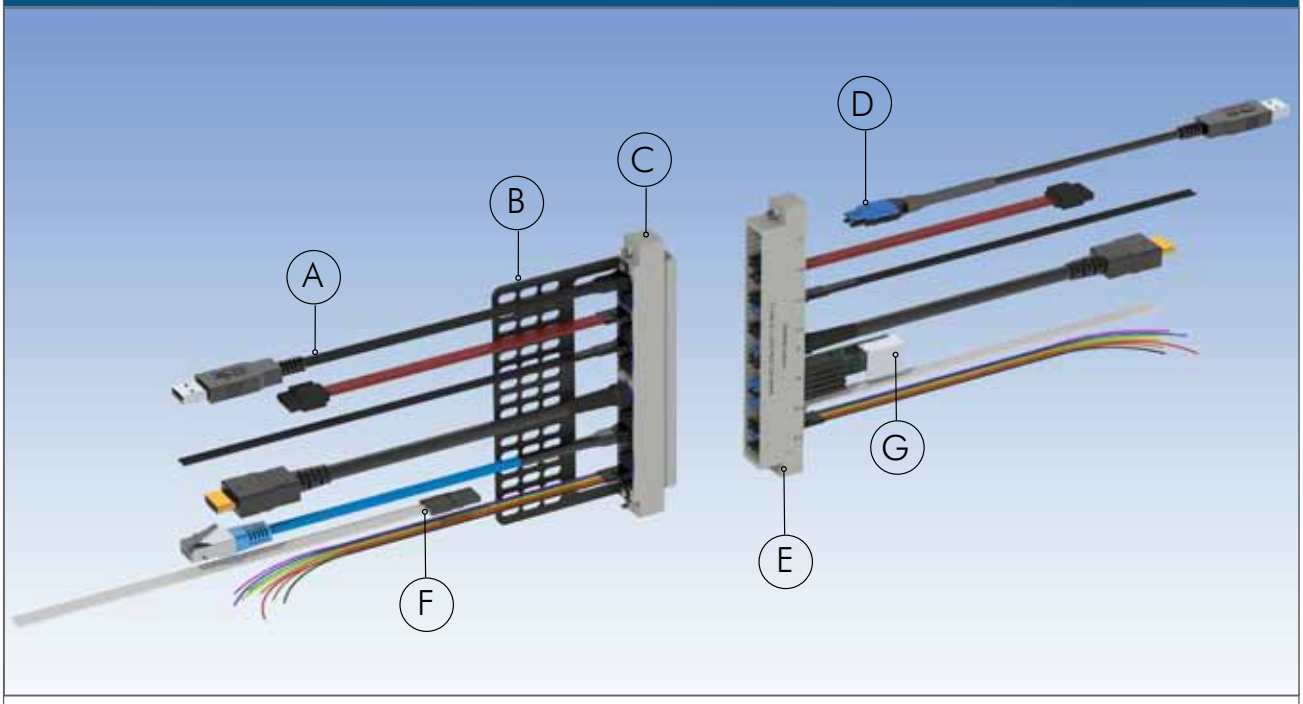

A. RCV/ITA VTAC HSD Patchcords*
B. Strain Relief Plate
C. SIM Receiver Module
D. SIM VTAC HSD Inserts
E. SIM ITA Module
F. SIM RCV/ITA QuadraPaddle Flying Leads
G. SIM VTAC Right Angle

Part #	Description	*Visit VPC.com for full product details*

SIM INSERTS - RECEIVER/ITA

510 180 101	Signal Insert, Receiver, SIM QuadraPaddle, 4 Position
510 181 101	Signal Insert, ITA, SIM QuadraPaddle, 4 Position
610 151 101	High Speed Insert, Receiver/ITA, SIM, 12.5 Gbps, 50µ", VTAC HSD (Only Available in Patchcords) (D)
610 151 103	High Speed Insert, Receiver/ITA, SIM, 50µ", VTAC HSD, Double Ended Insert (For Use with Right Angle Only)
610 151 104	High Speed Insert, Receiver/ITA, SIM, 50µ", VTAC HSD, Right Angle Insert
610 151 105	High Speed Insert, Receiver/ITA, SIM, 50µ", VTAC HSD, Retention Insert (For Use with Right Angle Only)
610 151 106	High Speed Insert, Receiver/ITA, SIM, 50µ", VTAC HSD Kit (For Use with Right Angle Only) (G)

SIM MODULES

510 170 101	SIM Module, Receiver, 34 Position (C)
510 171 101	SIM Module, ITA, 34 Position (E)

CABLE ASSEMBLIES (F)

7-152 924 000-036	Cable Assembly, Receiver, SIM QuadraPaddle Insert, 36", Flying Leads
7-152 924 000-072	Cable Assembly, Receiver, SIM QuadraPaddle Insert, 72", Flying Leads
7-151 924 000-036	Cable Assembly, ITA, SIM QuadraPaddle Insert, 36", Flying Leads
7-151 924 000-072	Cable Assembly, ITA, SIM QuadraPaddle Insert, 72", Flying Leads

ACCESSORIES

510 109 568	Strain Relief Plate for 34 Position Receiver/ITA SIM Module (B)
610 151 102	Blank Insert Kit, Receiver/ITA, SIM VTAC HSD, 10 Pieces

**For a complete list of SIM VTAC HSD Patchcords see page 20 and/or visit vpc.com/VTAC* (A)

SIM VTAC HSD Insert

Contact Specifications

Data Rate	12.5+ Gbps per differential pair
Crosstalk	30 dB min
Characteristic Impedance	100+/- 10 Ω - differential pair 50+/- 5 Ω - single ended
Operating Voltage and Current	3 amps max. continuous (350 volts max.)
Contact Resistance	40 mΩ max. per mated contact
Insulations Resistance	1000 MΩ min.
Dielectric Withstanding Voltage	1050 VDC RMS min.
Mating Force	12 oz max. [340 g] per insert
Insert Material	Outer shell - black LCP Male contact - alloy 7025
Contact Termination	Welded
Contact Plating	50 µ" Au over 100 µ" Ni

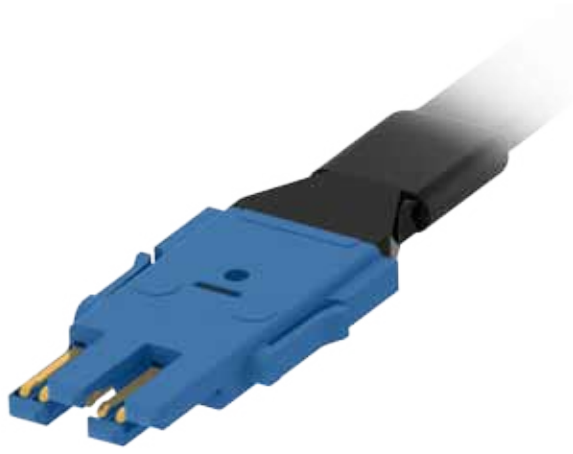

Receiver/ITA Contact

High Speed Insert, Receiver/ITA, SIM, 12.5 Gbps, 50µ", VTAC HSD • **Part # 610 151 101**

Part #	Description

SIM VTAC PATCHCORDS - RECEIVER

7-142702731-0XX	Signal Patchcord, Receiver, SIM VTAC HSD, Rosenberger HSD Plug, 1 Position
7-142877655-0XX	Signal Patchcord, Receiver, SIM VTAC HSD, 36", DVI-D Male Dual Link, 5 Position
7-142890690-0XX	Signal Patchcord, Receiver, SIM VTAC HSD, USB 3.0 Type A Male, 2 Position
7-142890691-0XX	Signal Patchcord, Receiver, SIM VTAC HSD, USB 3.0 Type A Female, 2 Position
7-142890692-0XX	Signal Patchcord, Receiver, SIM VTAC HSD, USB 3.0 Type B Male, 2 Position
7-142891693-0XX	Signal Patchcord, Receiver, SIM VTAC HSD, HDMI Male, 3 Position
7-142892700-0XX	Signal Patchcord, Receiver, SIM VTAC HSD, SATA Male, 1 Position
7-142893694-0XX	Signal Patchcord, Receiver, SIM VTAC HSD, RJ45 Plug, 2 Position
7-142861000-0XX	Signal Patchcord, Receiver, SIM VTAC HSD, Twinax Flying Leads, 1 Position
7-142895000-0XX	Signal Patchcord, Receiver, SIM VTAC HSD, 24 AWG, Flying Leads, 1 Position
7-142896722-0XX	Signal Patchcord, Receiver, SIM VTAC HSD, Mini-SAS HD Plug, 4 Position

SIM VTAC PATCHCORDS - ITA

7-141702731-0XX	Signal Patchcord, ITA, SIM VTAC HSD, Rosenberger HSD Plug, 1 Position
7-141877655-0XX	Signal Patchcord, ITA, SIM VTAC HSD, 36", DVI-D Male Dual Link, 5 Position
7-141890690-0XX	Signal Patchcord, ITA, SIM VTAC HSD, USB 3.0 Type A Male, 2 Position
7-141890691-0XX	Signal Patchcord, ITA, SIM VTAC HSD, USB 3.0 Type A Female, 2 Position
7-141890692-0XX	Signal Patchcord, ITA, SIM VTAC HSD, USB 3.0 Type B Male, 2 Position
7-141891693-0XX	Signal Patchcord, ITA, SIM VTAC HSD, HDMI Male, 3 Position
7-141892700-0XX	Signal Patchcord, ITA, SIM VTAC HSD, SATA Male, 1 Position
7-141893694-0XX	Signal Patchcord, ITA, SIM VTAC HSD, RJ45 Plug, 2 Position
7-141861000-0XX	Signal Patchcord, ITA, SIM VTAC HSD, Twinax Flying Leads, 1 Position
7-141895000-0XX	Signal Patchcord, ITA, SIM VTAC HSD, 24 AWG, Flying Leads, 1 Position
7-141896722-0XX	Signal Patchcord, ITA, SIM VTAC HSD, Mini-SAS HD Plug, 4 Position

**For a complete list of SIM VTAC HSD Patchcords with vpc.com/VTAC*

SIM QuadraPaddle Insert

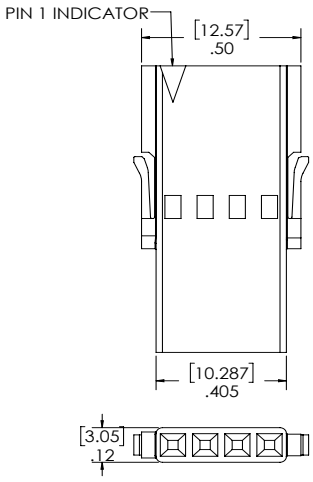

Signal Insert, Receiver, SIM QuadraPaddle,
4 Position • **Part # 510 180 101**

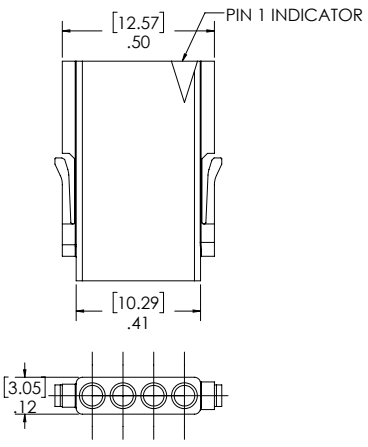

Signal Insert, ITA, SIM QuadraPaddle,
4 Position • **Part # 510 181 101**

Specifications

Insert Material	Black liquid crystal polymer
Operating Temperature	Operating • -55° C to 125° C Non-operating • -65° C to 225° C
Available Contact Positions	4
SIM Module Insert Positions Needed	1

The SIM QuadraPaddle insert was added to the SIM product family to bring more versatility. Sharing the same footprint as the SIM VTAC HSD insert, each SIM QuadraPaddle insert can fill one SIM insert slot within a SIM 90 Series module or i2 MX.

SIM VTAC Right Angle Kit

Contact Specifications

Data Rate	10+ Gbps per differential pair
Crosstalk	30 dB min
Characteristic Impedance	100+/- 10 Ω - differential pair 50+/- 5 Ω - single ended
Operating Voltage and Current	3 amps max. continuous (350 volts max.)
Contact Resistance	40 mΩ max. per mated contact
Insulation Resistance	1000 MΩ min.
Dielectric Withstanding Voltage	1050 VDC RMS min.
Mating Force	12 oz max. [340 g] per insert
Insert Material	Outer shell: black LCP Male contact: alloy 7025
Contact Plating	50 µ" Au over 100 µ" Ni

This two-piece kit includes Part # 610 151 103 and Part # 610 151 104 to allow custom PCBs to attach to SIM VTAC HSD inserts.

SIM VTAC Right Angle Kit (Receiver/ITA)
Part # 610 151 106

Part #	Description
SIM INSERTS	
610 151 103	High Speed Insert, Receiver/ITA, SIM, 50µ", VTAC HSD, Double Ended Insert (For Use with Right Angle Only)
610 151 104	High Speed Insert, Receiver/ITA, SIM, 50µ", VTAC HSD, Right Angle Insert
610 151 105	High Speed Insert, Receiver/ITA, SIM, 50µ", VTAC HSD, Retention Insert (For Use with Right Angle Only)
610 151 106	High Speed Insert, Receiver/ITA, SIM, 50µ", VTAC HSD Kit (For Use with Right Angle Only)
TOOLS	
910 112 130	Extraction Tool, SIM, Receiver/ITA
910 112 132	Tool, Insertion, Right Angle, VTAC HSD (For Use with Right Angle Only)
ACCESSORY	
610 151 102	Blank Insert Kit, Receiver/ITA, SIM VTAC HSD, 10 Pieces

Fully Loaded SIM VTAC Right Angle Kit

Contact Specifications

Data Rate	10+ Gbps per differential pair
Crosstalk	30 dB min
Characteristic Impedance	100+/- 10 Ω - differential pair 50+/- 5 Ω - single-ended
Operating Voltage and Current	3 amps max. continuous (350 volts max.)
Contact Resistance	40 mΩ max. per mated contact
Insulation Resistance	1000 MΩ min.
Dielectric Withstanding Voltage	1050 VDC RMS min.
Mating Force	12 oz max. [340 g] per insert
Insert Material	Outer shell: black LCP Male contact: alloy 7025
Contact Plating	50 µ" Au over 100 µ" Ni

This fully loaded SIM module kit comes with 34 SIM VTAC HSD double-ended and VTAC Right Angle inserts Part # 610 151 106. The module kit comes with two PCB brackets to help to secure and reinforce the module to a PCB. It also comes with two 2-56 captive module screws, and four M2 x 5 mm flathead screws.

34 Position Receiver SIM Module
Part # 510 170 102

34 Position ITA SIM Module
Part # 510 171 102

Part #	Description
PCB ADAPTERS	
510 170 102	SIM Module, Receiver, Fully Loaded with SIM VTAC Double Ended and Right Angle Inserts (610 151 106)
510 171 102	SIM Module, ITA, Fully Loaded with SIM VTAC Double Ended and Right Angle Inserts (610 151 106)
SIM INSERTS	
610 151 103	High Speed Insert, Receiver/ITA, SIM, 50µ", VTAC HSD, Double Ended Insert (For Use with Right Angle Only)
610 151 104	High Speed Insert, Receiver/ITA, SIM, 50µ", VTAC HSD, Right Angle Insert
610 151 105	High Speed Insert, Receiver/ITA, SIM, 50µ", VTAC HSD, Retention Insert (For Use with Right Angle Only)
610 151 106	High Speed Insert, Receiver/ITA, SIM, 50µ", VTAC HSD Kit (For Use with Right Angle Only)
TOOLS	
910 112 130	Extraction Tool, SIM, Receiver/ITA
910 112 132	Tool, Insertion, Right Angle, VTAC HSD, (For Use with Right Angle Only)
ACCESSORY	
610 151 102	Blank Insert Kit, Receiver/ITA, SIM VTAC HSD, 10 Pieces

SIM PCB Adapter Solution

Contact Specifications

Data Rate	10+ Gbps per differential pair
Crosstalk	30 dB min
Characteristic Impedance	100+/- 10 Ω - differential pair 50+/- 5 Ω - single ended
Operating Voltage and Current	3 amps max. continuous (350 volts max.)
Contact Resistance	40 mΩ max. per mated contact
Insulation Resistance	1000 MΩ min.
Dielectric Withstanding Voltage	1050 VDC RMS min.
Mating Force	12 oz max. [340 g] per insert
Insert Material	Outer shell: blue LCP Male contact: alloy 7025
Contact Termination	Right angle pressfit
Contact Plating	50 µ" Au over 100 µ" Ni

5 Position PCB Adapter
Receiver | ITA
510 170 104 | 510 171 104

Part #	Description
PCB ADAPTERS	
510 170 104	PCB Adapter, Receiver, SIM, VTAC HSD, 5 Position, to 1 USB 3.0
510 171 104	PCB Adapter, ITA, SIM, VTAC HSD, 5 Position, to 1 USB 3.0
510 170 105	PCB Adapter, Receiver, SIM, VTAC HSD, 6 Position, to 1 Cat 6
510 171 105	PCB Adapter, ITA, SIM, VTAC HSD, 6 Position, to 1 Cat 6
SIM INSERTS	
610 151 103	High Speed Insert, Receiver/ITA, SIM, 50µ", VTAC HSD, Double Ended Insert (For Use with Right Angle Only)
610 151 104	High Speed Insert, Receiver/ITA, SIM, 50µ", VTAC HSD, Right Angle Insert
610 151 105	High Speed Insert, Receiver/ITA, SIM, 50µ", VTAC HSD, Retention Insert (For Use with Right Angle Only)
TOOL	
910 112 130	Extraction Tool, SIM, Receiver/ITA
ACCESSORY	
610 151 102	Blank Insert Kit, Receiver/ITA, SIM VTAC HSD, 10 Pieces

**More vendor connectors are available. For a complete list of SIM VTAC Right Angle PCB adapters visit vpc.com/RA*

SIM PCB Adapter Solution

Contact Specifications

Data Rate	10+ Gbps per differential pair
Operating Current	2 amps
Operating Temperature	-55° C to 105° C
Max. Current	3 amps max. continuous (350 volts max.)
Dielectric Withstanding Voltage	300 VDC RMS min.
Insulation Resistance	1000 MΩ min.

Receiver PCB Adapter
Part # 510 170 103

ITA PCB Adapter
Part # 510 171 103

Part #	Description
PCB ADAPTERS	
510 170 103	PCB Adapter, Receiver, SIM, VTAC HSD, 34 Position, to 6 USB 3.0
510 171 103	PCB Adapter, ITA, SIM, VTAC HSD, 34 Position, to 6 USB 3.0
SIM INSERTS	
610 151 103	High Speed Insert, Receiver/ITA, SIM, 50μ", VTAC HSD, Double Ended Insert (For Use with Right Angle Only)
610 151 104	High Speed Insert, Receiver/ITA, SIM, 50μ", VTAC HSD, Right Angle Insert
610 151 105	High Speed Insert, Receiver/ITA, SIM, 50μ", VTAC HSD, Retention Insert (For Use with Right Angle Only)
TOOL	
910 112 130	Extraction Tool, SIM, Receiver/ITA
ACCESSORY	
610 151 102	Blank Insert Kit, Receiver/ITA, SIM VTAC HSD, 10 Pieces

** More vendor connectors are available. For a complete list of SIM VTAC Right Angle PCB adapters visit vpc.com/RA*

34 Position SIM Module Inserts

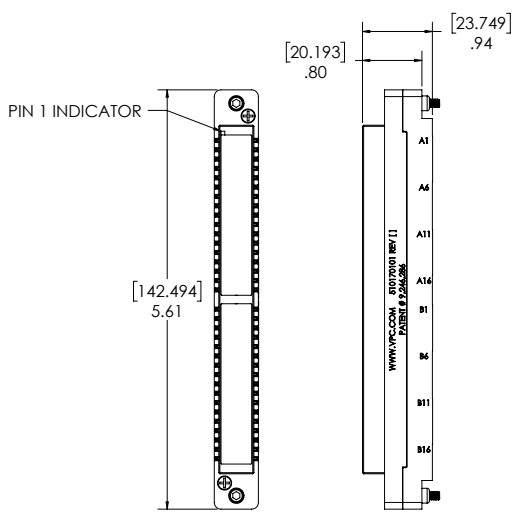

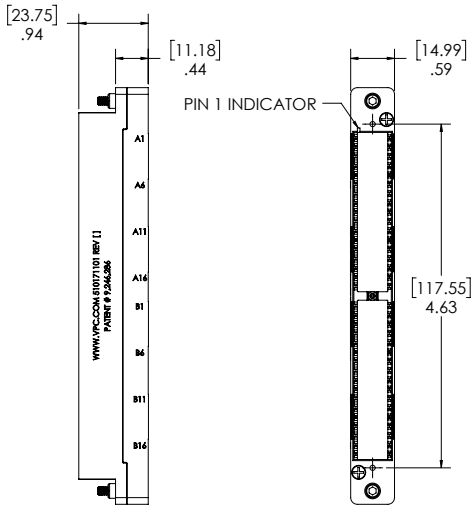

SIM Module, Receiver, 34 Position • **Part # 510 170 101** ITA • **Part # 510 171 101**

Specifications

Material	Nickel plated zinc
Operating Temperature	-40°C to 125°C
Available Contact Positions	34
Module Positions Needed	1

The 90 Series SIM receiver and ITA modules can accept up to 34 SIM inserts, including: SIM VTAC HSD, SIM QuadraPaddle, and SIM VTAC Right Angle.

SIM Solutions • Accessories

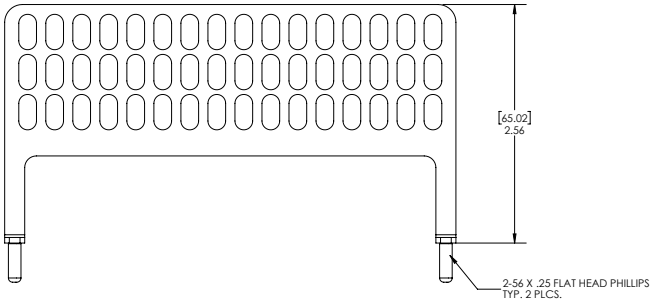

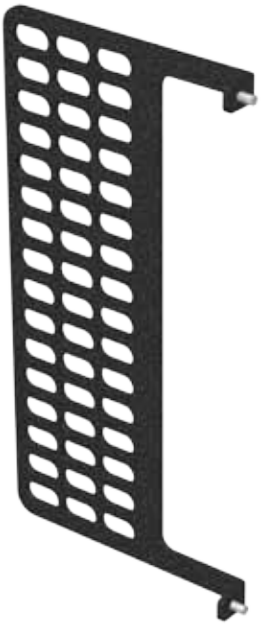

The strain relief plate is made of aluminum and is black powder coated. It includes four wire ties and stainless steel hardware.

➤ Strain Relief Plate, Receiver/ITA, SIM Module • **Part # 510 109 568**

Blank inserts are for unused SIM insert slots. One blank insert fills a SIM single insert slot and fits in either receiver or ITA 90 Series modules or the i2 MX. Ten blank inserts are included per part number.

➤ Blank Insert Kit Receiver/ITA, SIM, 10 Pieces • **Part # 610 151 102**

Endless Possibilities
with i2 Micro iCon.

i2 Micro iCon

Innovative Engagement Design

- Spring-locking tabs fasten over latching post for secure engagement
- Keying pins and rectangular locking mechanism ensure even and precise engagement
- Removable ITA backshell enables easy wire access

Compact and Stackable

- **Sleek .8" footprint** enables horizontal stackability in a multi-connector layout
- 30° angled cable exit minimizes vertical space between connectors

PCB Capable

- High-density signal headers enable direct connection to PCB adapter or PXI card
- Header contains solderless compliant pins for easy integration
- Twin female **QuadraPaddle** contacts can be directly connected to the PCB using right angle headers

Exceptional Capabilities

- Options include: i2 wired, i2 direct to PCB, i2 to flex print, and i2 to PCB adapter
- High-density signal connector offers 168 signal positions
- **i2 Hybrid** connector offers 120 signal and 12 Micro Power/Micro Coaxial positions

Precise Connection

- Rugged engagement mechanism engineered for over 10,000 cycles
- 360° engagement handle provides zero Z tolerance

For a complete list of i2 product offerings visit ***vpc.com/i2***

1 Module Solution • i2 Micro iCon

i2 Micro iCon meets the need for a slim-line, low I/O connector. Designed for the small connector market, i2 offers a sleek .8" footprint with capabilities for discrete-wiring, horizontal, and right-angle PCB mounting.

Features and Benefits

- 168 signal points available with QuadraPaddle technology
- Hybrid version offers 120 signal and 12 Micro Coaxial/ Micro Power positions
- 30° cable exit for vertical stackability
- 0.8" footprint for horizontal stackability
- Integrated spring locking tabs ensure even and secure engagement
- Keying pins to prevent connector mismatch and damage to pins
- Direct connection to PCB with the 84 or 60 pin header
- Connection options include: i2 direct to PCB, i2 to flex print, i2 to PCB adapter card, and i2 discrete-wired
- Engineered for over 10,000 cycles

i2 Receiver and ITA

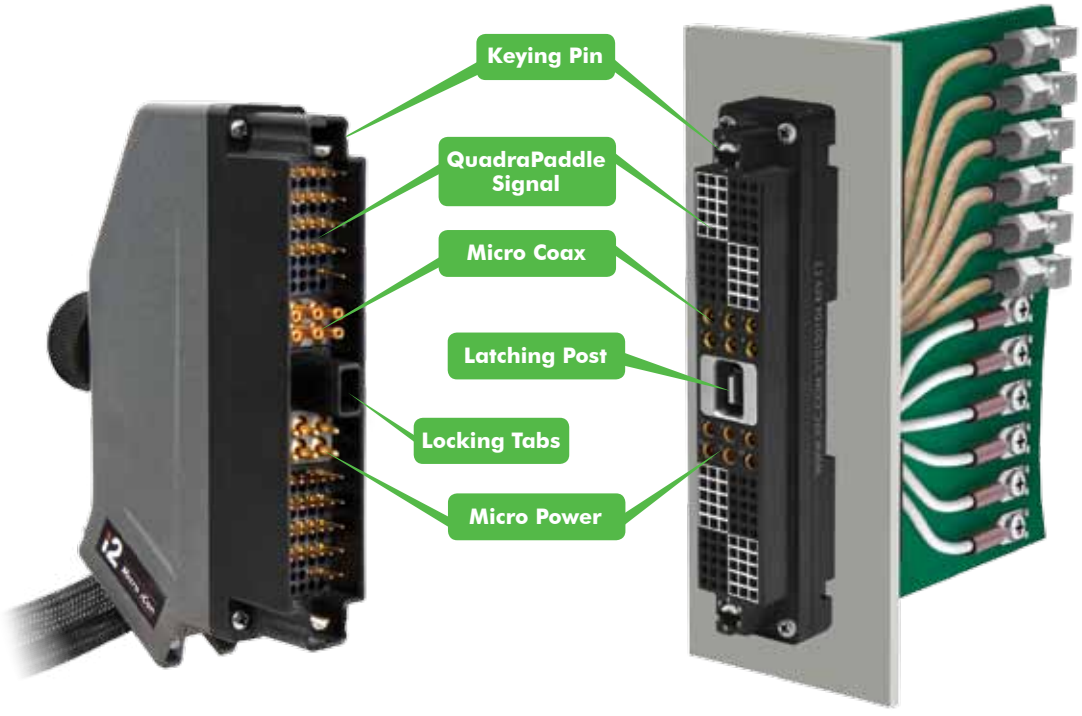

i2 Micro iCon Slide Mount Configuration

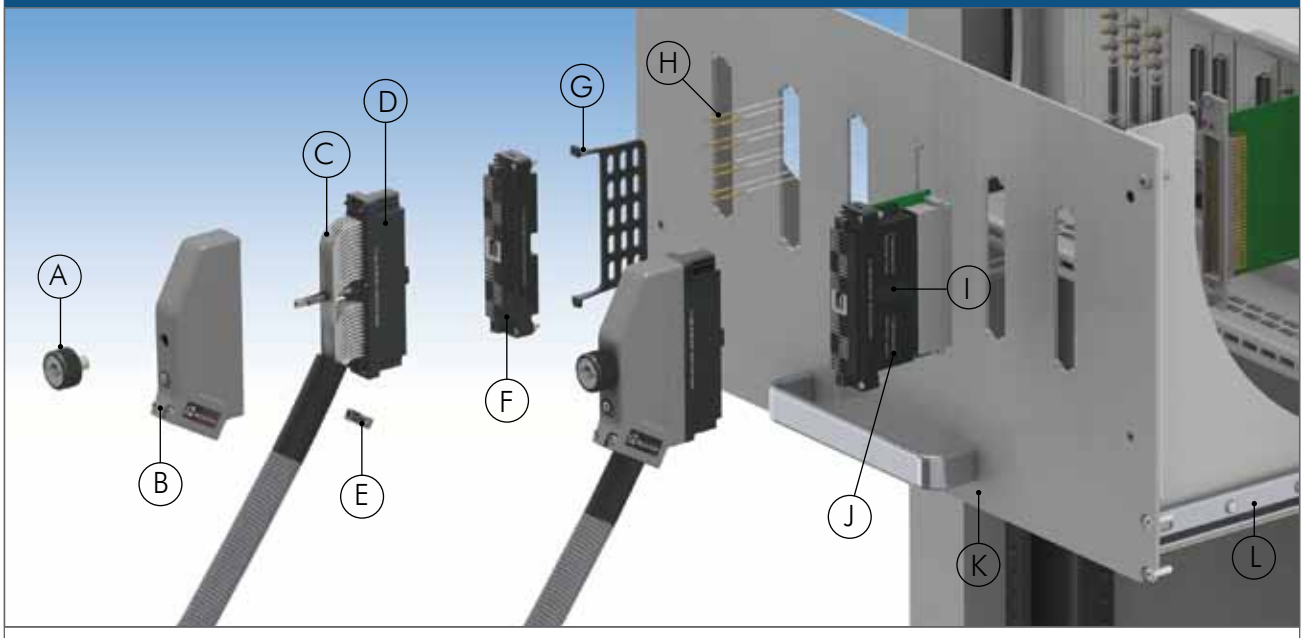

A. Engagement Knob
B. ITA Backshell
C. ITA Patchcords
D. i2 Micro iCon ITA
E. ITA Cable Clamp
F. i2 Micro iCon Receiver
G. Strain Relief Plate
H. Receiver Patchcords
I. Mounting Bracket
J. 84 Pin Header
K. Mounting Panel
L. Slide Kit

Part #	Description	*Visit VPC.com for full product details*

RECEIVERS (F)

310 130 101	Receiver, i2 Micro iCon, 168 Position, Fully Loaded with Twin Female Contacts (610 138 200)
310 130 102	Receiver, i2 Micro iCon, 168 Position, for Crimp Contacts
310 130 104	Receiver, i2 Micro iCon, 120/12 Position Hybrid, Fully Loaded with Twin Female Contacts (610 138 200)
310 130 105	Receiver, i2 Micro iCon, 120/12 Position Hybrid, for Crimp Contacts
310 130 107	Receiver, i2 Micro iCon, 168 Position, Unloaded, for Twin Female Contacts (610 138 200)

ITAS

410 130 101	ITA, i2 Micro iCon, 168 Position (A)(B)(D)(E)
410 130 104	ITA, i2 Micro iCon, 120/12 Position Hybrid
410 130 106	ITA, i2 Micro iCon, 168 Position, with Oversized Backshell

CABLE ASSEMBLIES

410 130 409	Cable Assembly, ITA, i2 Micro iCon, QuadraPaddle, 36", Flying Leads
410 130 410	Cable Assembly, ITA, i2 Micro iCon Hybrid, QuadraPaddle, Micro Power and Micro Coaxial, 36", Flying Leads
410 130 425	Cable Assembly, ITA, i2 Micro iCon, QuadraPaddle, 72", Double Ended
410 130 426	Cable Assembly, ITA, i2 Micro iCon Hybrid, QuadraPaddle, Micro Power and Micro Coaxial, 72", Double Ended

MOUNTING OPTIONS

310 113 586	Mounting Panel, i2 Micro iCon, 6U, 6 Positions, with Slide Mounting (slide kit required) (K)(L)
310 113 607	Cover Plate, i2 Micro iCon, for Mounting Panel Cutouts, Painted Gray

For other mounting options, please visit vpc.com/products/mounting_options

SLIDE KITS (L)

310 113 451	28" Slide Kit, Fits 26"–30" Deep Racks, Supports 180 lbs.
310 113 411	30" Slide Kit, Fits 28"–32" Deep Racks, Supports 180 lbs.
310 113 500	36" Slide Kit, Fits 34"–38" Deep Racks, Supports 180 lbs.

ACCESSORIES

310 113 461	Keying Pin Kit, iSeries, Receiver and ITA
310 113 559	Strain Relief Plate, i2 Micro iCon, Receiver (G)
310 113 562	Bracket, i2 Micro iCon, Receiver, for PCB Mounting (I)
310 113 569	Protective Cover, i2 Micro iCon, Receiver
410 112 924	Protective Cover, i2 Micro iCon, ITA
510 109 204	Header, i2 Micro iCon, Receiver, 84 Pin, for PCB Mounting (J)
510 109 206	Header, i2 Micro iCon, Receiver, 60 Pin, for PCB Mounting
510 150 207	i2 PCB Adapter, Receiver, QuadraPaddle, 168 Position, to 2 PCB Mounted 68 Pin Male SCSI Connectors
510 150 208	i2 PCB Adapter, Receiver, QuadraPaddle, 168 Position, to 2 PCB Mounted 68 Pin Female VHDCI Connectors

i2 Micro iCon Loaded Twin Female Contacts • Receiver

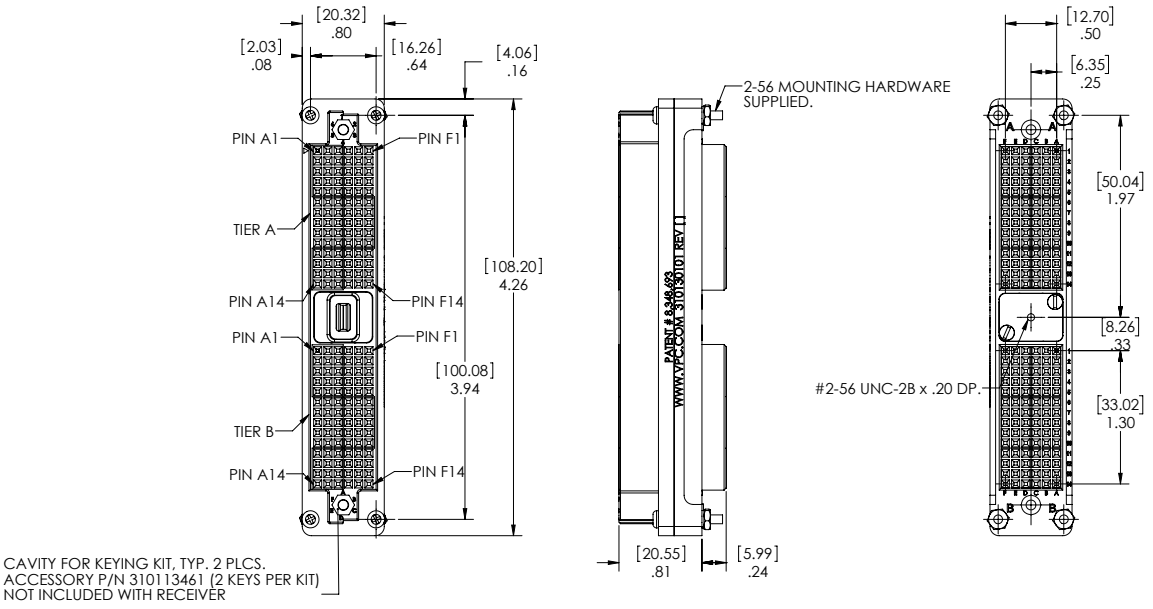

➤ Receiver, i2 Micro iCon, 168 Position, Fully Loaded with Twin Female Contacts (610 138 200)
Part # 310 130 101

Receiver Specifications

Weight	.18 lbs [.08 kg]
Frame Material	Glass reinforced thermoplastic
Hardware Material	Stainless steel alloy
Contact Positions	168 (loaded)
Cycle Life	10,000 cycles
Temperature	–55° C to 105° C
Vibration Random	11.6 g's RMS (Condition V PSD 0.1 MIL-STD-1344, Method 2005/ EIA364-28)
Vibration Sine	15 g's (Condition III MIL-STD-1344, Method 2005/EIA364-28)
Temperature	-55° C to 105° C

The i2 Micro iCon receiver is capable of holding up to 168 QuadraPaddle contacts. QuadraPaddle modules are molded on .100" (2.54 mm) centers to meet the need for high-density I/O in a compact assembly. This i2 receiver is fully loaded with QuadraPaddle twin female signal contacts, Part # 610 138 200. An unloaded crimp version is also available, Part # 310 130 102.

i2 Micro iCon Unloaded Twin Female Contacts • Receiver

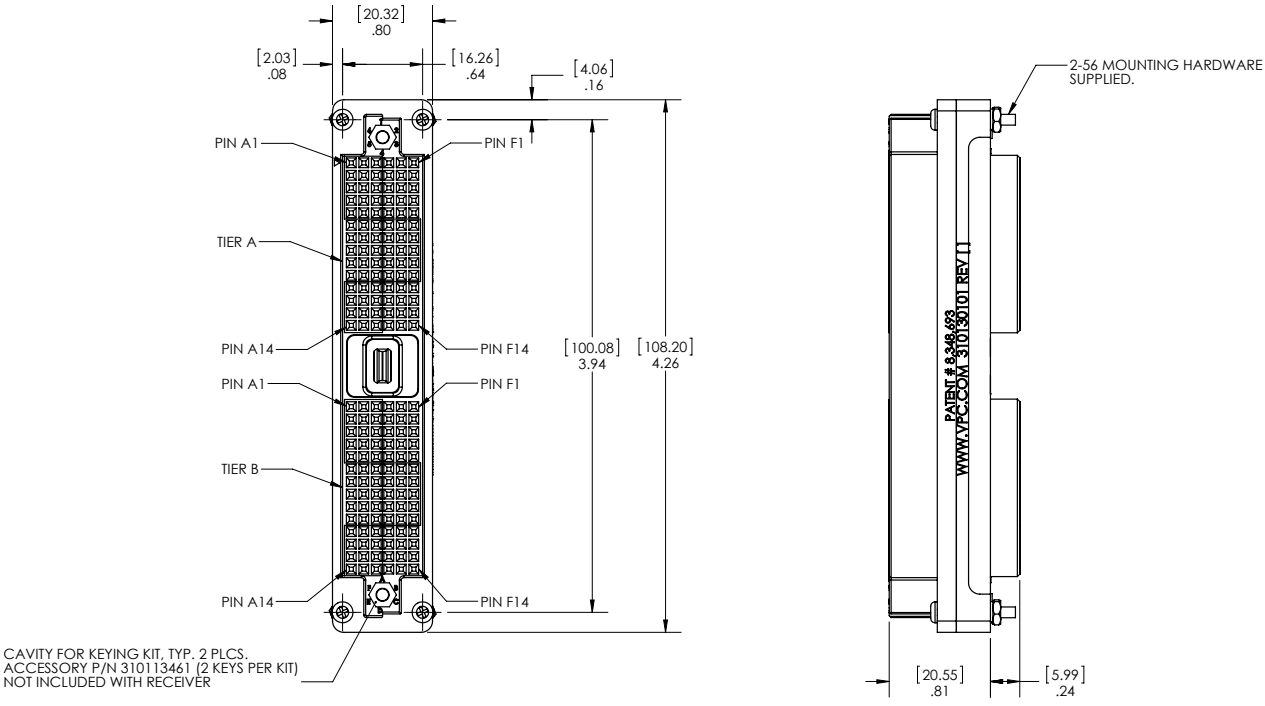

➤ Receiver, i2 Micro iCon, 168 Position, Unloaded, for Twin Female Contacts (610 138 200)
Part # 310 130 107

Receiver Specifications

Weight	.14 lbs [.06 kg]
Frame Material	Glass reinforced thermoplastic
Hardware Material	Stainless steel alloy
Contact Positions	168
Cycle Life	10,000 cycles
Shock	50 g's (Condition A MIL-STD-1344, Method 2004/EIA364-27)
Vibration Random	11.6 g's RMS (Condition V PSD 0.1 MIL-STD-1344, Method 2005/EIA364-28)
Vibration Sine	15 g's (Condition III MIL-STD-1344, Method 2005/EIA364-28)
Temperature	-55° C to 105° C

This i2 Micro iCon receiver comes ready to load with twin female contacts Part # 610 138 200.

i2 Micro iCon • Hybrid Receiver

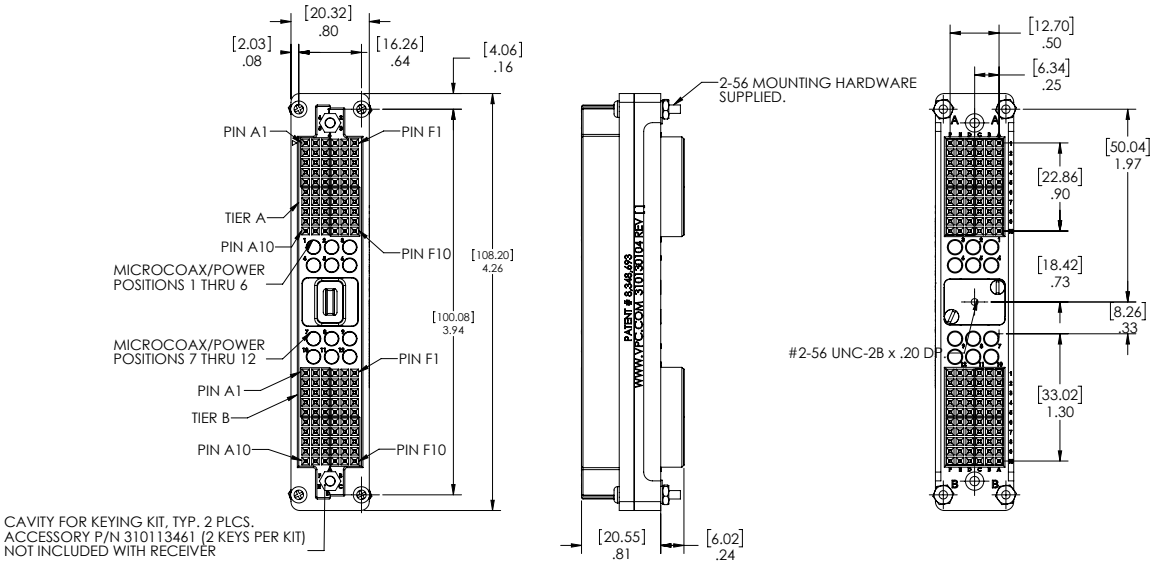

Receiver, i2 Micro iCon, 120/12 Position Hybrid, Loaded with Twin Female Contacts (610 138 200)
Part # 310 130 104

Receiver Specifications

Weight	.25 lbs [.11 kg]
Frame Material	Glass reinforced thermoplastic
Hardware Material	Stainless steel alloy
Contact Positions	120 signal, 12 Micro Coax/Power
Cycle Life	10,000 cycles
Temperature	–55° C to 105° C

The i2 Micro iCon hybrid receiver is capable of holding up to 120 QuadraPaddle and 12 Micro Coax or Micro Power contacts. This i2 receiver is loaded with QuadraPaddle twin female signal contacts, Part # 610 138 200. An unloaded crimp version is also available, Part # 310 130 105.

i2 Micro iCon • 168 Position ITA

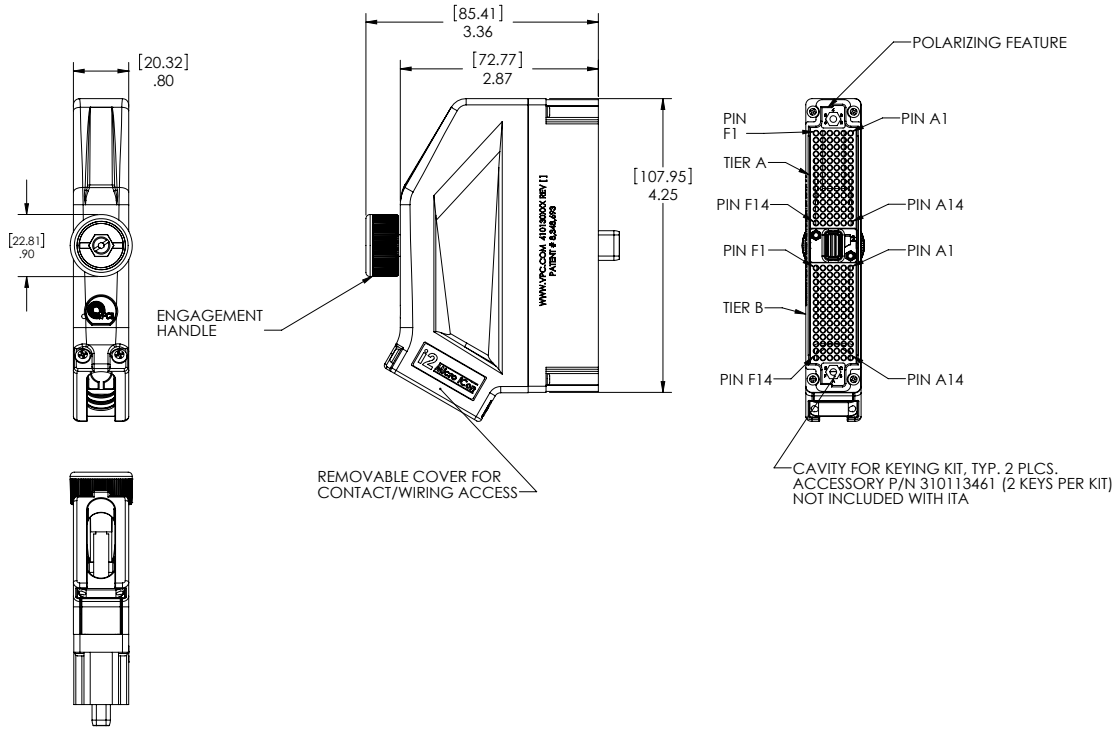

➤ ITA, i2 Micro iCon, 168 Position • **Part # 410 130 101**

ITA Specifications

Weight	.25 lbs [.11 kg]
Frame Material and Housing	Glass reinforced thermoplastic
Hardware Material	Stainless steel
Latch Material	Nickel plated beryllium copper
Backshell Material	Glass reinforced thermoplastic
Cable Clamp Material	Powder coated aluminum
Contact Positions	168 signal
Cycle Life	10,000 cycles
Temperature	–55° C to 105° C

The i2 Micro iCon ITA is capable of holding up to 168 QuadraPaddle contacts. The 30 degree U-shaped cable clamp allows ITA modules to be pre-wired before assembly and can hold cable bundles with an oblong bushing effective diameter of .77". The removable backshell allows easy access to wiring for maintenance and probing.

i2 Micro iCon • Hybrid ITA

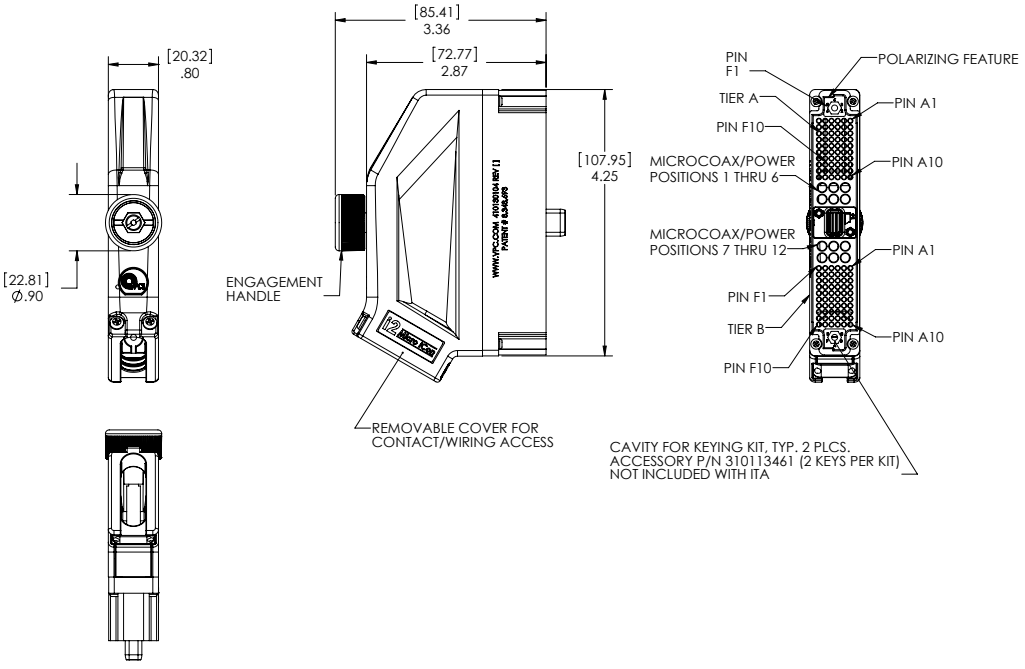

➤ ITA, i2 Micro iCon, 120/12 Position Hybrid • **Part # 410 130 104**

ITA Specifications

Weight	.25 lbs [.11 kg]
Frame Material and Housing	Glass reinforced thermoplastic
Hardware Material	Stainless steel
Latch Material	Nickel plated beryllium copper
Backshell Material	Glass reinforced thermoplastic
Cable Clamp Material	Powder coated aluminum
Contact Positions	120 signal, 12 Micro Coax/Power
Cycle Life	10,000 cycles
Temperature	–55° C to 105° C

The i2 Micro iCon hybrid ITA is capable of holding up to 120 QuadraPaddle and 12 Micro Coaxial or Micro Power contacts. The 30 degree U-shaped cable clamp allows ITA modules to be pre-wired before assembly and can hold cable bundles with an oblong bushing effective diameter of 0.77". The removable backshell allows easy access to wiring for maintenance and probing.

i2 Micro iCon • Accessories

The 84 pin header for i2 Micro iCon contains solderless pins and enables a direct connection from the i2 standard receiver to a PCB such as a PXI card.

- Header, Receiver, i2 Micro iCon, 84 Pin, for PCB Mounting • **Part # 510 109 204**

The 60 pin header for i2 Micro iCon contains solderless pins and enables a direct connection from the i2 Hybrid receiver to a PCB such as a PXI card.

- Header, Receiver, i2 Micro iCon, 60 Pin, for PCB Mounting • **Part # 510 109 206**

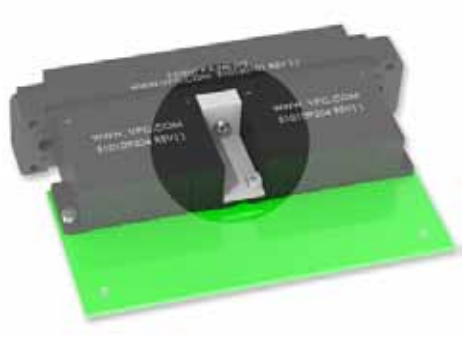

The i2 Micro iCon mounting bracket secures the PCB to the receiver module.

- Bracket, Receiver, i2 Micro iCon, for PCB Mounting • **Part # 310 113 562**

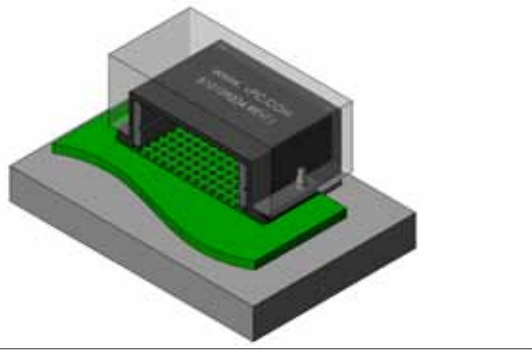

The press kit tool for i2 PCB headers aids in pressing the press fit pins into the header.

- Tool, Press Kit, for i2 PCB Headers **Part # 910 121 199**

The receiver protective cover protects contacts when the receiver is not in use.

- Protective Cover, i2 Micro iCon, Receiver • **Part # 310 113 569**

The ITA protective cover protects contacts when the ITA is not in use. This cover features an included wire lanyard.

- Protective Cover, i2 Micro iCon, ITA • **Part # 410 112 924**

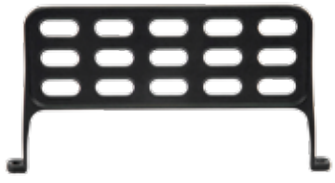

The i2 Micro iCon strain relief plate attaches to the wiring side of the receiver and can be secured before receiver installation.

- Strain Relief Plate, i2 Micro iCon, Receiver • **Part # 310 113 559**

More Configurability
with i2 MX.

Expanded Options

The **i2 MX** builds upon on the success of the popular i2 Micro iCon, offering a configurable connector in a slim .8" footprint. Now with **multiple I/O options** to choose from, i2 MX allows you to engineer the ideal connector to meet your test application needs.

Featuring an all metal backshell and an innovative cable exit, i2 MX provides maximum cable bundle capacity with available **electromagnetic interference (EMI)** protection. i2 MX meets the demand for higher levels of signal performance necessary in today's testing applications.

Configured for Any Test

The i2 MX offers more contact options than the standard i2, allowing the flexibility to choose **multiple modular inserts** to fit your needs.

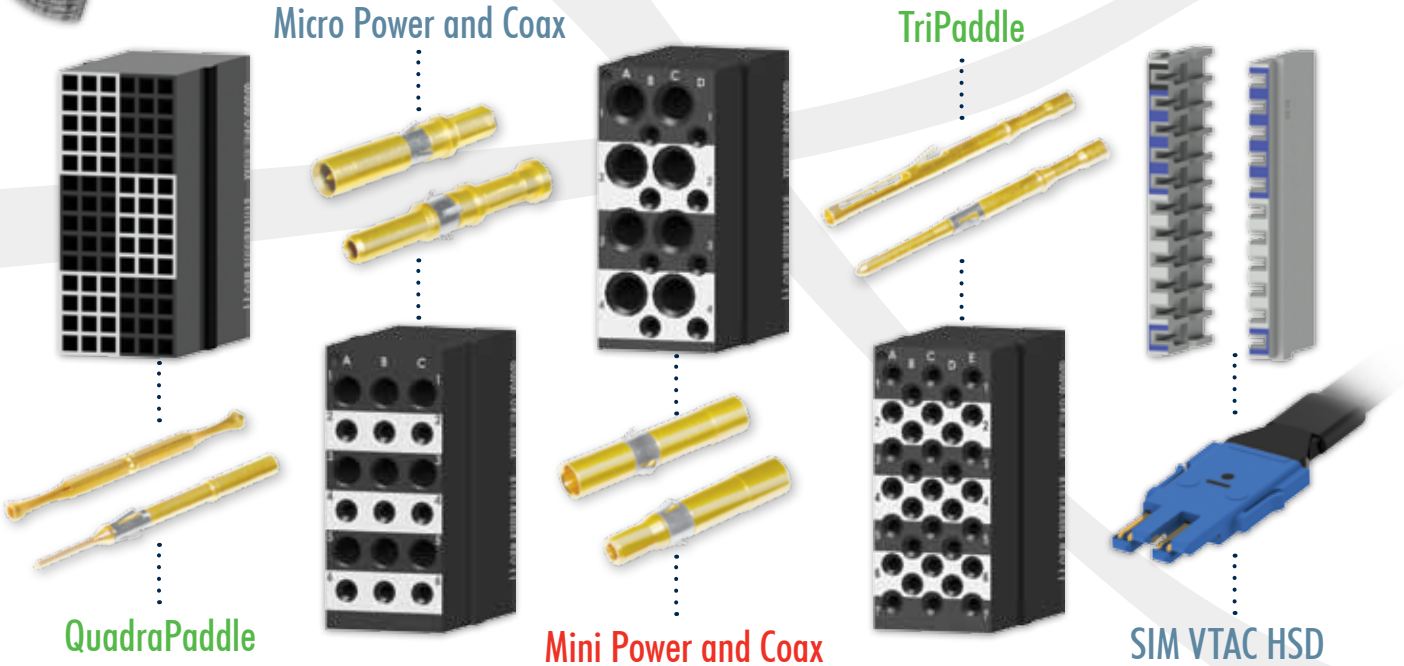

Quality engineered
Cable Assemblies available

Innovative Design Features

- Slimmer, metal engagement knob allows increased horizontal stackability
- EMI option provides effective shielding performance and ensures signal integrity
- Multiple contacts supported: QuadraPaddle, TriPaddle, SIM VTAC HSD, Power, and Coax
- Reversible all-metal backshell for multiple mounting options

emi PROTECTION

Modular

Various modular inserts available for increased contact selection

Scalable

Can be used within multiple VPC interfaces, including 90 Series

Configurable

Interchangeable modular inserts to fit requirement needs

For a complete list of i2 MX product offerings visit **vpc.com/i2MX**

2 Module Solution • i2 MX

The i2 MX was engineered to retain the popular features of the i2 Micro iCon, while addressing the need of electromagnetic interference (EMI) shielding in the testing industry. The i2 MX also features the modularity and versatility of the iCon, offering a greater variety of I/O options.

Features and Benefits

- EMI-shielding minimizes EMI leaks to and from other sources
- Oblong cable exit provides clearance for maximum cable bundle capacity and EMI-shielding
- Multiple I/O's supported: signal, coax, power, and high speed
- Easy access for trouble-shooting and maintenance with removable side panel on ITA backshell
- Specifically designed receiver strain relief for reliable patchcord alignment and security
- Engineered for over 10,000 cycles

i2 MX Receiver and ITA

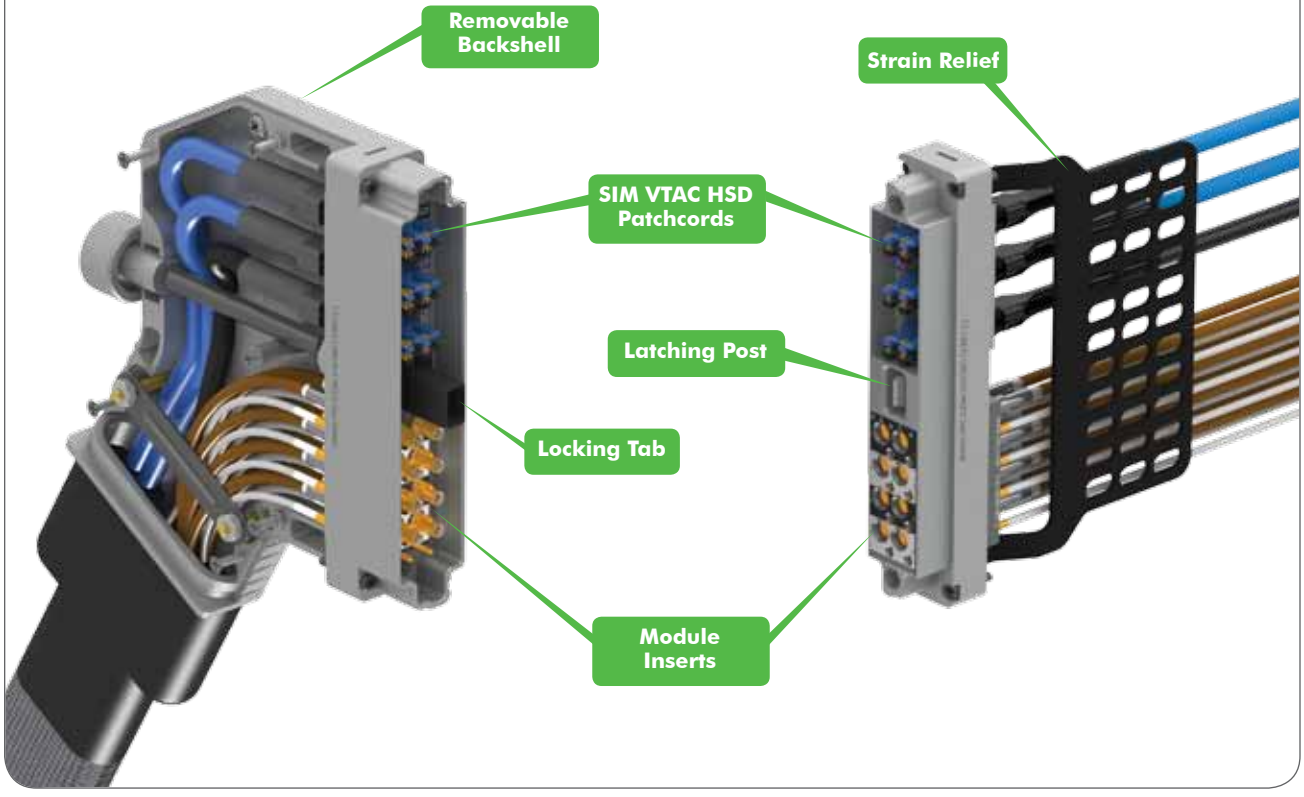

i2 MX Panel Mount Configuration

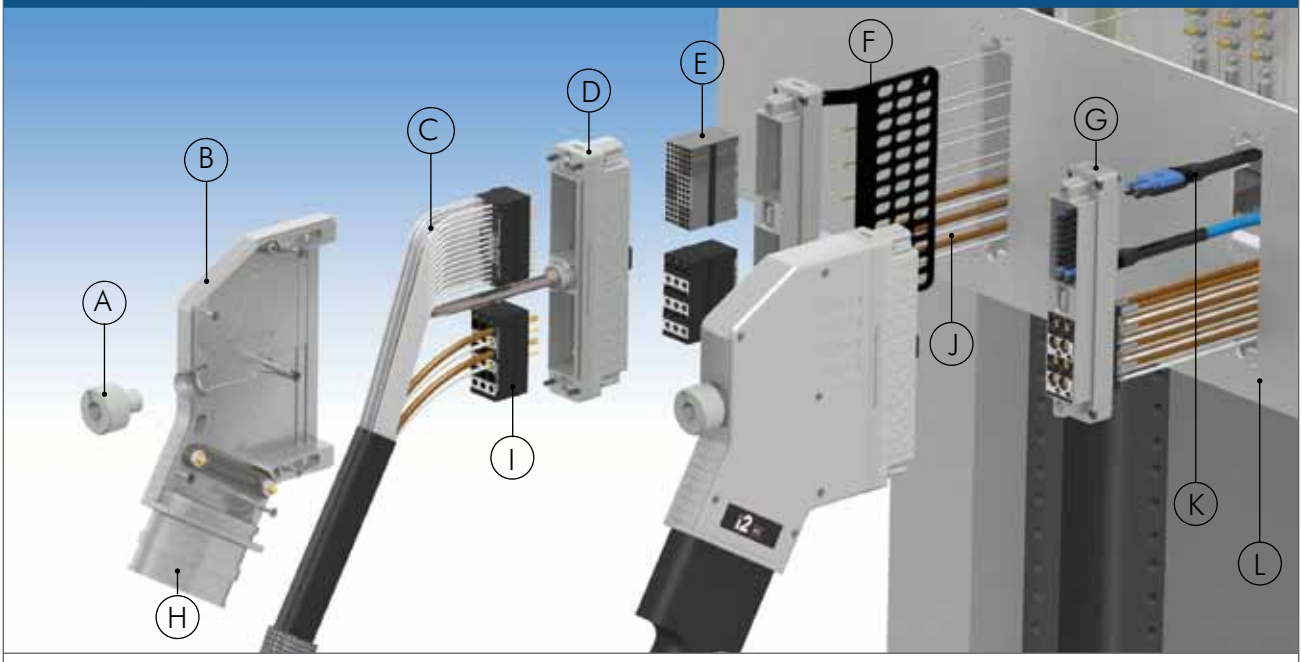

A. Engagement Knob
B. i2 MX ITA Backshell
C. ITA Patchcords
D. ITA Module Frame
E. Receiver Module Insert
F. Strain Relief Plate
G. i2 MX Receiver
H. i2 MX ITA Cable Exit
I. ITA Module Insert
J. Receiver Patchcords
K. SIM VTAC HSD Patchcord
L. Mounting Panel

Part #	Description	*Visit VPC.com for full product details*
RECEIVERS		
310 130 113	Receiver, i2 MX, 2 SIM Module Inserts, 22 Position, EMI-Shielded	
310 130 114	Receiver, i2 MX, EMI-Shielded (G)	
310 130 202	Receiver, i2 MX, 2 QuadraPaddle Module Inserts, Fully Loaded with Twin Female Contacts (610 138 200), EMI-Shielded	
310 130 204	Receiver, i2 MX, 2 TriPaddle Signal/Micro Power and Micro Coaxial Module Inserts, EMI-Shielded	
310 130 205	Receiver, i2 MX, QuadraPaddle Module Insert, Crimp/Micro Power and Micro Coaxial Module Insert, EMI-Shielded	
ITAS		
410 130 114	ITA, i2 MX, EMI Backshell, with Cable Exit (A)(B)(D)(H)	
410 130 116	ITA, i2 MX, 2 SIM Module Inserts, 22 Position, EMI Backshell	
410 130 117	ITA, i2 MX, EMI Backshell, without Cable Exit	
410 130 202	ITA, i2 MX, 2 QuadraPaddle Module Inserts, Crimp, EMI Backshell	
410 130 204	ITA, i2 MX, 2 TriPaddle Signal/Micro Power and Micro Coaxial Module Inserts, EMI Backshell	
410 130 205	ITA, i2 MX, QuadraPaddle Module Insert, Crimp/Micro Power and Micro Coaxial Module Insert, EMI Backshell	
SIM INSERTS		
610 151 101	High Speed Insert, Receiver/ITA, SIM, 12.5 Gbps, 50µ", VTAC HSD (Only Available in Patchcords) (K)	
510 180 101	Signal Insert, Receiver, SIM QuadraPaddle, 4 Position	
510 181 101	Signal Insert, ITA, SIM QuadraPaddle, 4 Position	
MODULE INSERTS, RECEIVER (E)		
510 143 001	SIM Module Insert, Receiver, i2 MX, 11 Position	
510 143 002	QuadraPaddle Signal, Module Insert, Receiver, i2 MX, 84 Position, Crimp	
510 143 003	QuadraPaddle Signal, Module Insert, Receiver, i2 MX, 84 Position, Fully Loaded w/Twin Female Contacts (610 138 200)	
510 143 004	TriPaddle Signal/Micro Power and Micro Coaxial, Module Insert, Receiver, i2 MX, 9/9 Position	
510 143 005	TriPaddle Signal/Mini Power and Mini Coaxial, Module Insert, Receiver, i2 MX, 8/8 Position	
510 143 006	TriPaddle Signal, Module Insert, Receiver, i2 MX, 33 Position	
MODULE INSERTS, ITA (I)		
510 144 001	SIM Module Insert, ITA, i2 MX, 11 Position	
510 144 002	QuadraPaddle Signal, Module Insert, ITA, i2 MX, 84 Position, Crimp	
510 144 004	TriPaddle Signal/Micro Power and Micro Coaxial, Module Insert, ITA, i2 MX, 9/9 Position	
510 144 005	TriPaddle Signal/Mini Power and Mini Coaxial, Module Insert, ITA, i2 MX, 8/8 Position	
510 144 006	TriPaddle Signal, Module Insert, ITA, i2 MX, 33 Position	
ACCESSORIES		
310 113 461	Keying Pin Kit, iSeries, Receiver and ITA	
310 113 667	Protective Cover, i2 MX, Receiver, EMI-Shielded	
310 113 681	Strain Relief Plate, i2 MX, Receiver (F)	
410 112 924	Protective Cover, i2 Micro iCon, ITA	
510 109 204	Header, i2 Micro iCon, Receiver, 84 Pin, for PCB Mounting	

i2 MX • Receiver

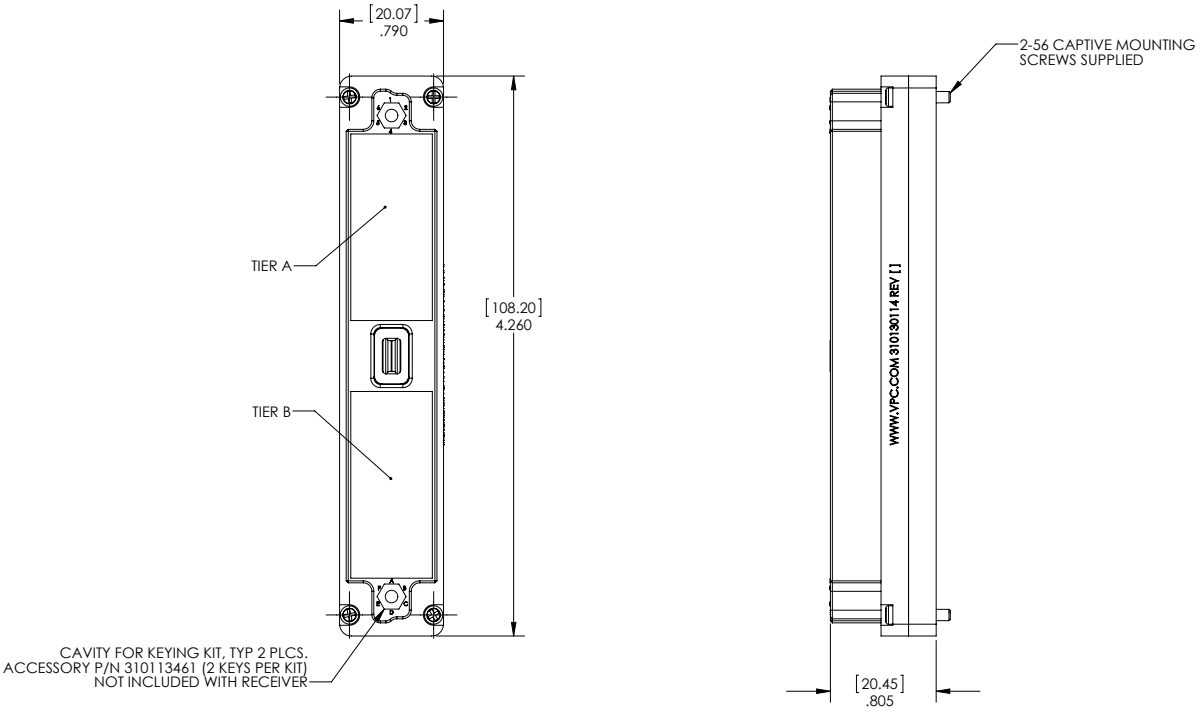

➤ Receiver, i2 MX, EMI-Shielded • **Part # 310 130 114**

Receiver Specifications

Weight	.17 lbs [.08 kg]
Frame Material	Nickel plated zinc
Hardware Material	Stainless steel
Available Module Insert Positions	2 positions
Cycle Life	10,000 cycles
Temperature	–40° C to 125° C

The i2 MX receiver accepts two module inserts, which allows a variety of signal, power, coax, thermocouple, and fiber optic connections. Pre-configured receivers are also available. For more information, please refer to the previous exploded-view diagram on page 41.

i2 MX • Receiver with SIM Module Inserts

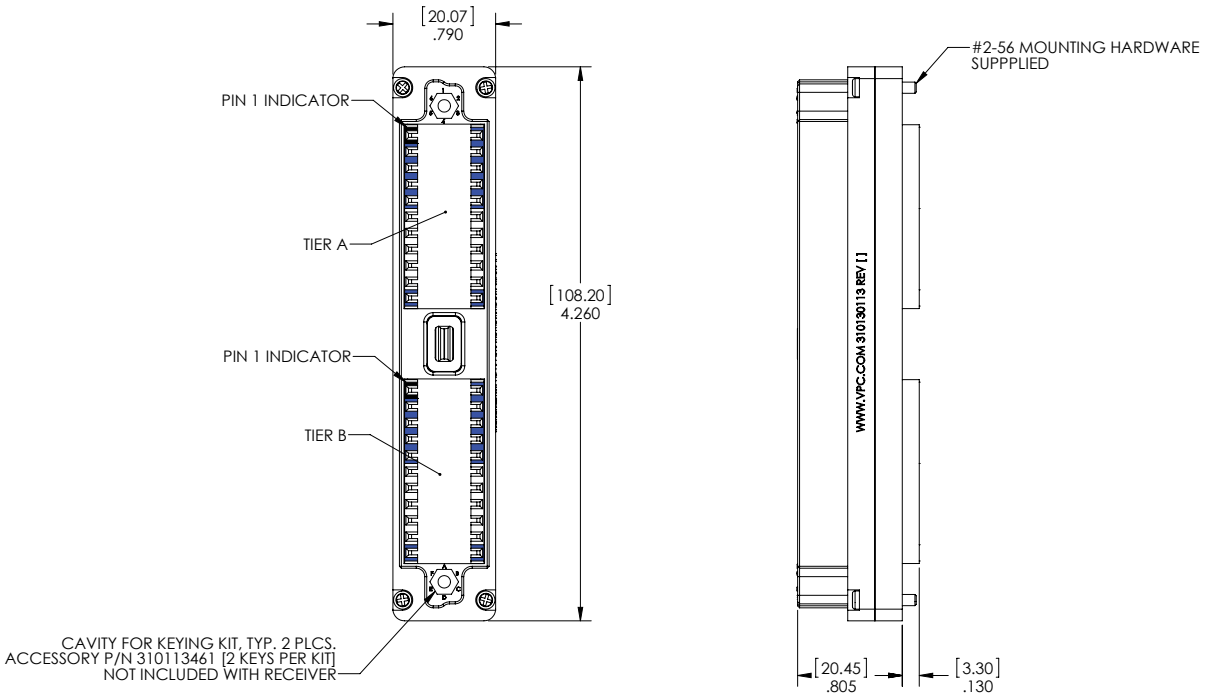

➤ Receiver, i2 MX, 2 SIM Module Inserts, 22 Position, EMI-Shielded • **Part # 310 130 113**

Receiver Specifications

Weight	.23 lbs [.10 kg]
Frame Material	Nickel plated zinc
Hardware Material	Stainless steel
Available SIM Insert Positions	22 positions
Available Module Insert Positions	2 positions
Cycle Life	10,000 cycles
Temperature	–40° C to 125° C

This i2 MX receiver includes two SIM module inserts which allows it to be configured with 22 SIM QuadraPaddle inserts or 22 SIM VTAC HSD inserts.

i2 MX • ITA

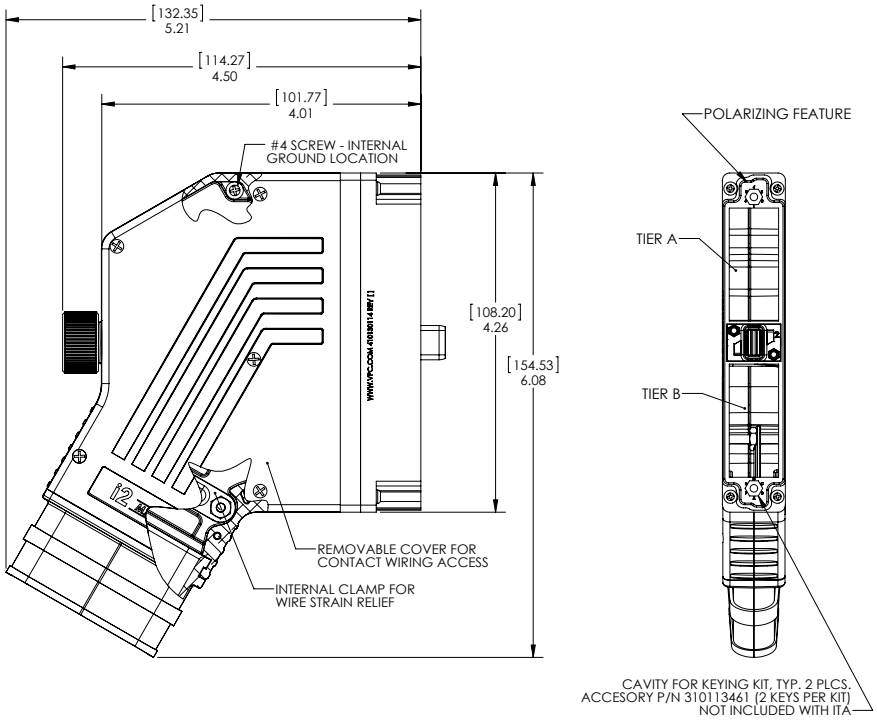

➤ ITA, i2 MX, EMI Backshell, with Cable Exit • **Part # 410 130 114**

ITA Specifications

Weight	.63 lbs [.28 kg] without protective cover
Frame Material	Nickel plated zinc
Hardware Material	Stainless steel
Latches	Nickel plated berylium copper
Backshell	Nickel plated aluminum
Available Module Insert Positions	2 positions
Cycle Life	10,000 cycles
Operating Temperature	–40° C to 125° C

The i2 MX ITA accepts two module inserts, which allows a variety of signal, power, coax, thermocouple, and fiber optic connections. The cable exit is one inch in diameter. Pre-configured receivers are also available. For more information, please refer to the previous exploded-view diagram on page 41.

i2 MX • ITA with SIM Module Inserts

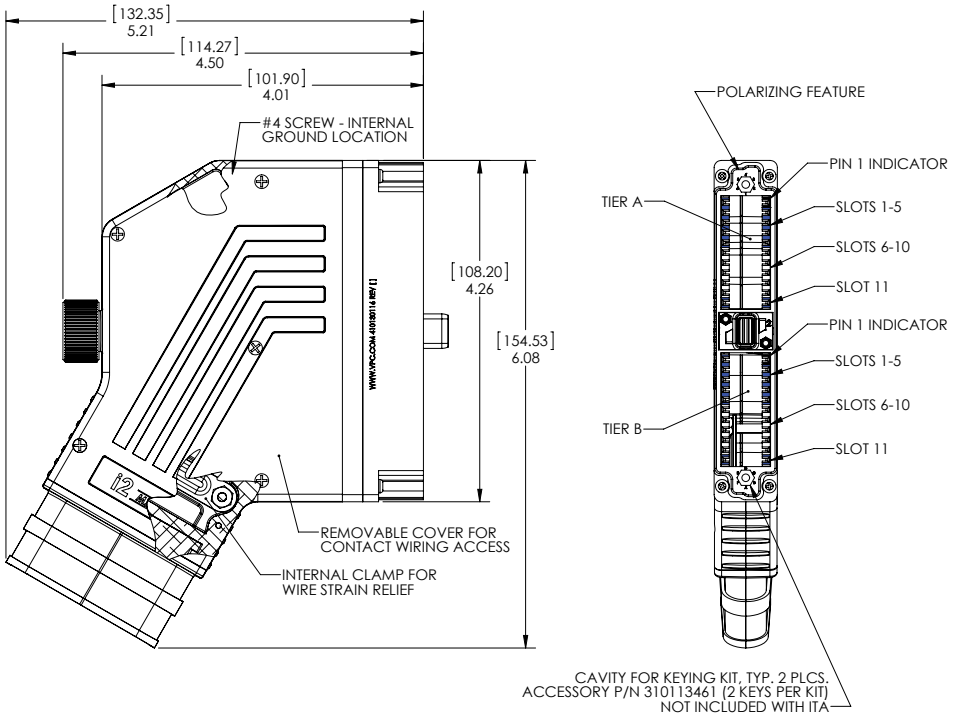

➤ ITA, i2 MX, 2 SIM Module Inserts, 22 Position, EMI Backshell • **Part # 410 130 116**

ITA Specifications

Weight	.69 lbs [.31 kg] without protective cover
Frame Material	Nickel plated zinc
Hardware Material	Stainless steel
Latches	Nickel plated berylium copper
Backshell	Nickel plated aluminum
Available SIM Insert Positions	22 positions
Available Module Insert Positions	2 positions
Cycle Life	10,000 cycles
Operating Temperature	–40° C to 125° C

This i2 MX ITA includes two SIM module inserts which allows the connector to be configured with 22 SIM QuadraPaddle inserts or 22 SIM VTAC HSD inserts.

11 Position SIM Module Inserts

Specifications

Material	Nickel plated zinc
Operating Temperature	-40°C to 125°C
Available Insert Positions	11
Module Positions Needed	1

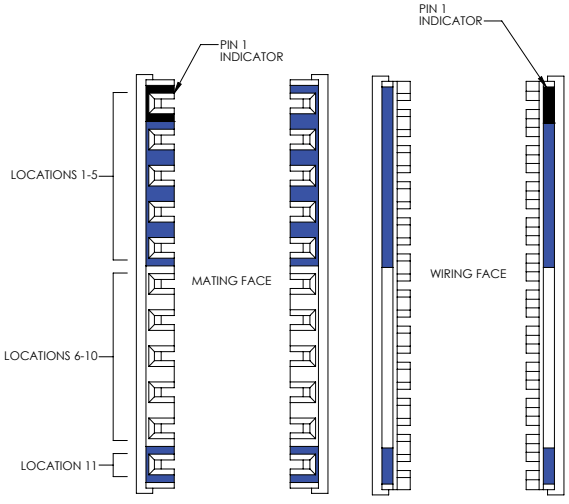

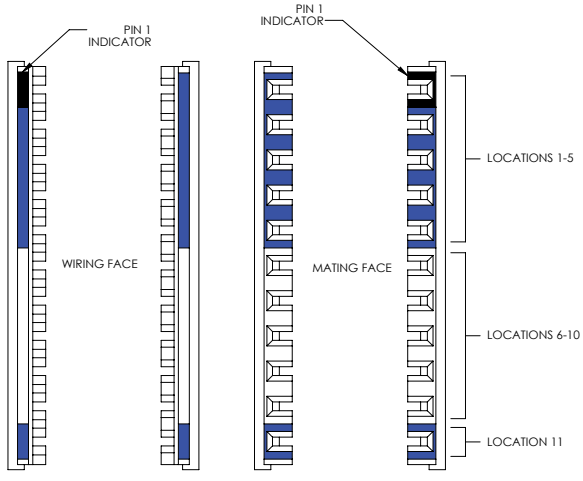

Receiver • **Part # 510 143 001** ITA • **Part # 510 144 001**

Part #	Description	Contacts Used
I2 MX RECEIVER SIM MODULE INSERT		
510 143 001	SIM Module Insert, Receiver, i2 MX, 11 Position	610 151 101 610 151 103 510 180 101
I2 MX ITA SIM MODULE INSERT		
510 144 001	SIM Module Insert, ITA, i2 MX, 11 Position	610 151 101 610 151 103 510 181 101

i2 MX • Accessories

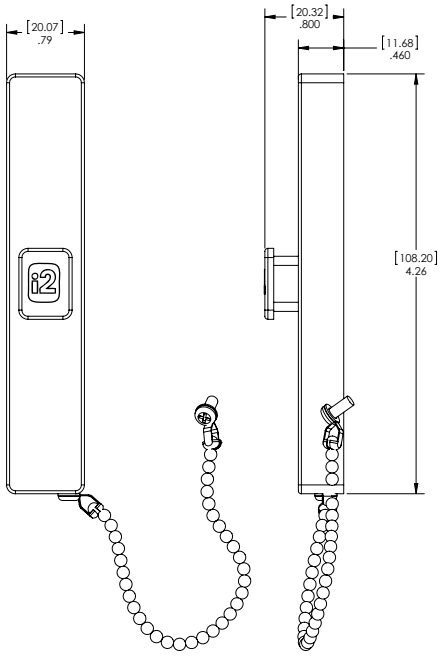

The EMI-shielded receiver protective cover for the i2 MX is available with a beaded chain lanyard.

➤ Protective Cover, i2 MX, Receiver, EMI-Shielded • **Part # 310 113 667**

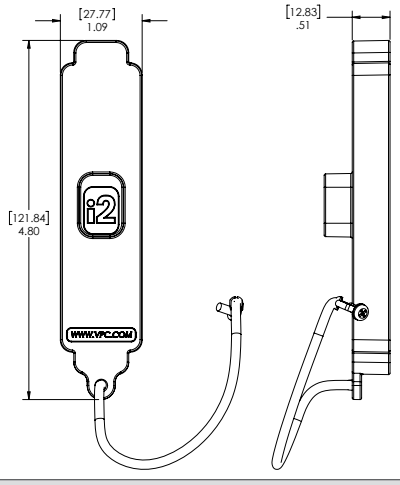

The ITA protective cover is designed to protect the contacts in your ITA when not engaged.

➤ Protective Cover, i2 Micro iCon, ITA • **Part # 410 112 924**

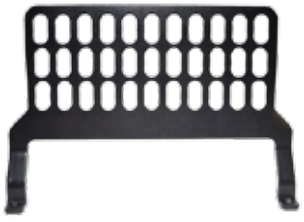

The strain relief plate is made of aluminum and is black powder coated. It includes four wire ties and stainless steel hardware.

➤ Strain Relief Plate, i2 MX Receiver • **Part # 310 113 681**

Make Infinite Connections
with the i1.

Rugged Connector

- Engagement mechanism engineered for over 10,000 cycles
- **Durable** - will withstand drop and vibration test conditions
- Functional in thermal testing environments from -55°C to 105°C

emi PROTECTION

Exceptional Design Features

- Polarizing feature with optional keying for proper alignment
- 30° U-shaped cable clamp for strain relief
- Optional EMI-shielding to protect signal integrity with metallized plastic shielding in the backshell
- Removable backshell and engaging mechanism enable easy wire access

For a complete list of EMI conduit and backshells visit www.vpc.com/backshell

***Quick Connect* half-turn engagement handle**

Unique Engagement

- Half-turn quick cam mechanism
- Spring-locking tabs with polarizing feature ensure even engagement
- Keying and guide pins maintain proper alignment when engaging

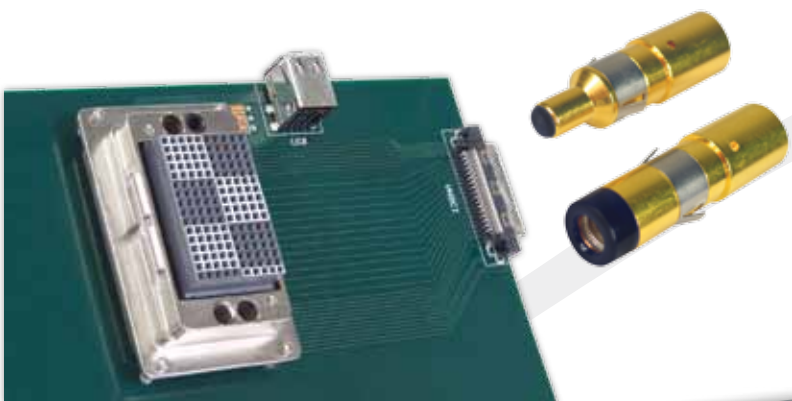

Variety of Options

- Accepts all iCon modules; hybrid modules allow multiple I/O options, including: signal, power, coax, fiber optic, pneumatic, and high power
- PCB-mountable with QuadraPaddle technology
- Standard double-ended and **flying lead** cable configurations available
- Visit **vpc.com/wire** to explore our wiring options

1 Module Solution • i1

The i1 is ideal for small connector needs. Following the success of VPC's popular rack and panel connector, iCon, the i1 was developed to satisfy the need for an even smaller connector. Each i1 connector holds a single iCon module, making it the perfect solution for low I/O, hybrid applications.

Features and Benefits

- Accepts all iCon modules, enabling mixing of I/O with hybrid modules
- PCB-mountable
- Spring-locking tabs ensure even engagement
- Keying and guide pins ensure proper alignment and prevent incorrect mating
- Recessed ITA contacts protect your investment
- Removable backshell and engaging mechanism allow easy access to wire
- Engineered for over 10,000 cycles

i1 ITA and Receiver

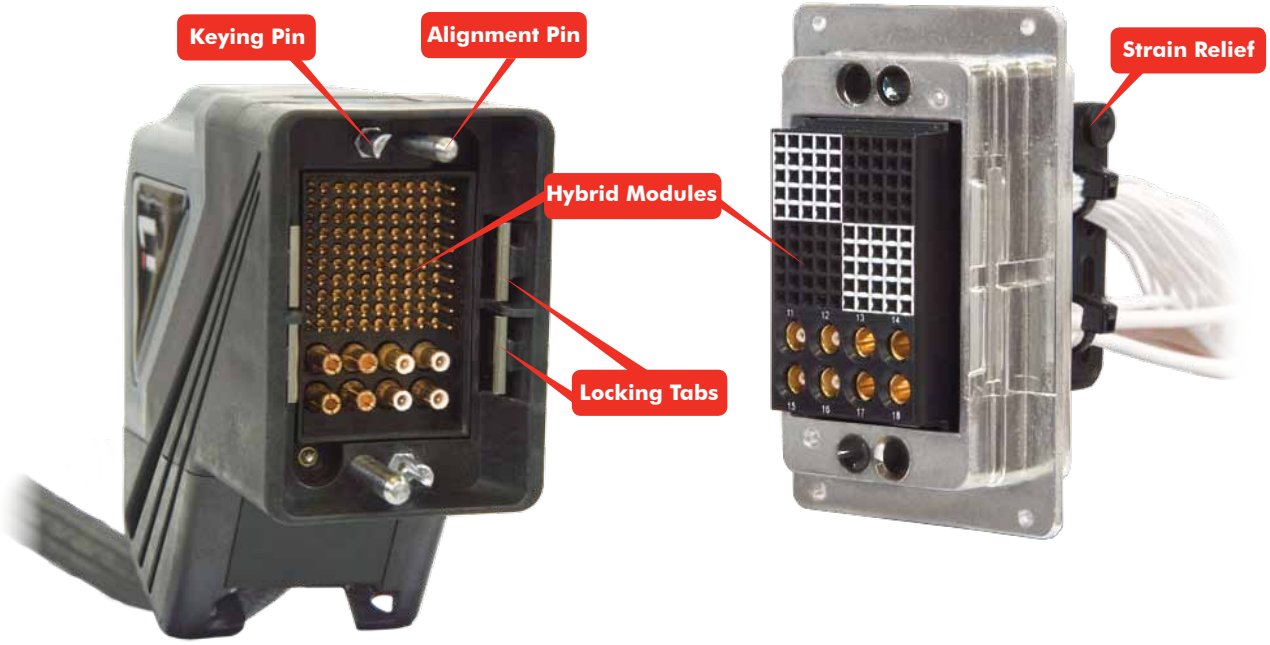

i1 Slide Mount Configuration

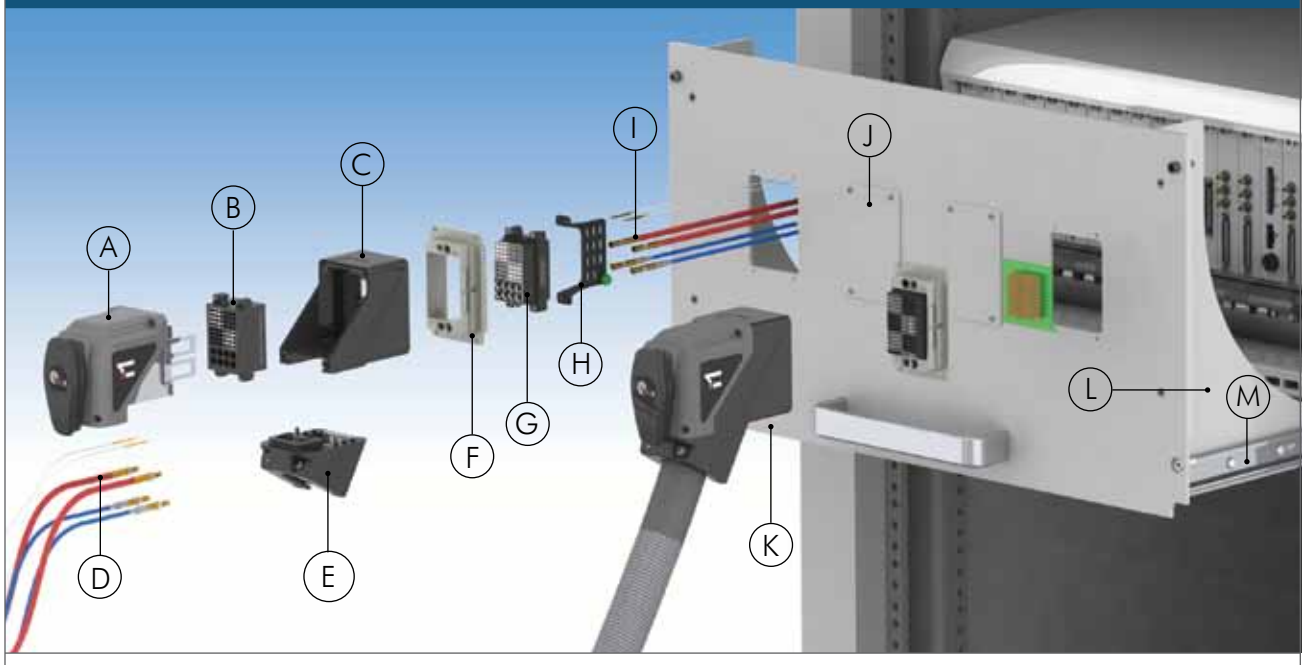

A. ITA Backshell and Engaging Mechanism
B. ITA Module
C. i1 ITA Frame
D. ITA Patchcords
E. U-shaped Cable Clamp
F. i1 Receiver Frame
G. Receiver Module
H. Strain Relief
I. Receiver Patchcords
J. Cover Plate
K. Mounting Panel
L. Mounting Flange
M. Slide Kit

Part #	Description	*Visit VPC.com for full product details*
RECEIVER		
310 128 101	Receiver, i1, with Protective Cover (F)	
ITAS		
410 128 101	ITA, i1, with Protective Cover (A)(C)(E)	
410 128 102	ITA, i1, EMI-Shielded, with Threaded Coupling Adapter and Protective Cover	
410 128 103	ITA, i1, with Large Cable Clamp and Protective Cover	
CABLE ASSEMBLIES		
410 128 461	Cable Assembly, ITA, i1, QuadraPaddle, 36", Flying Leads	
410 128 467	Cable Assembly, ITA, i1 Hybrid 100/8, QuadraPaddle, Mini Power and Mini Coaxial, 36", Flying Leads	
410 128 539	Cable Assembly, ITA, i1, QuadraPaddle, 72", Double Ended	
MOUNTING OPTIONS		
310 113 517	Fixed Mounting Panel, i1, 2U, 8 Positions	
310 113 546	Cover Plate, i1, for Mounting Panel Cutouts, Painted Gray (J)	
310 113 547	Mounting Panel, i1, 6U, 4 Positions, with Slide Mounting (slide kit required) (K)(L)	
For other mounting options, please visit vpc.com/products/mounting_options		
SLIDE KITS (M)		
310 113 451	28" Slide Kit, Fits 26"–30" Deep Racks, Supports 180 lbs.	
310 113 411	30" Slide Kit, Fits 28"–32" Deep Racks, Supports 180 lbs.	
310 113 500	36" Slide Kit, Fits 34"–38" Deep Racks, Supports 180 lbs.	
ACCESSORIES		
310 113 461	Keying Pin Kit, iSeries, Receiver and ITA	
310 113 531	Strain Relief Plate, i1, Receiver (H)	
310 113 582	Strain Relief Stand-off Kit, iCon, Receiver	
310 113 524	Replacement Protective Cover, i1, Receiver	
410 112 864	Replacement Protective Cover, i1, ITA	

i1 Receiver

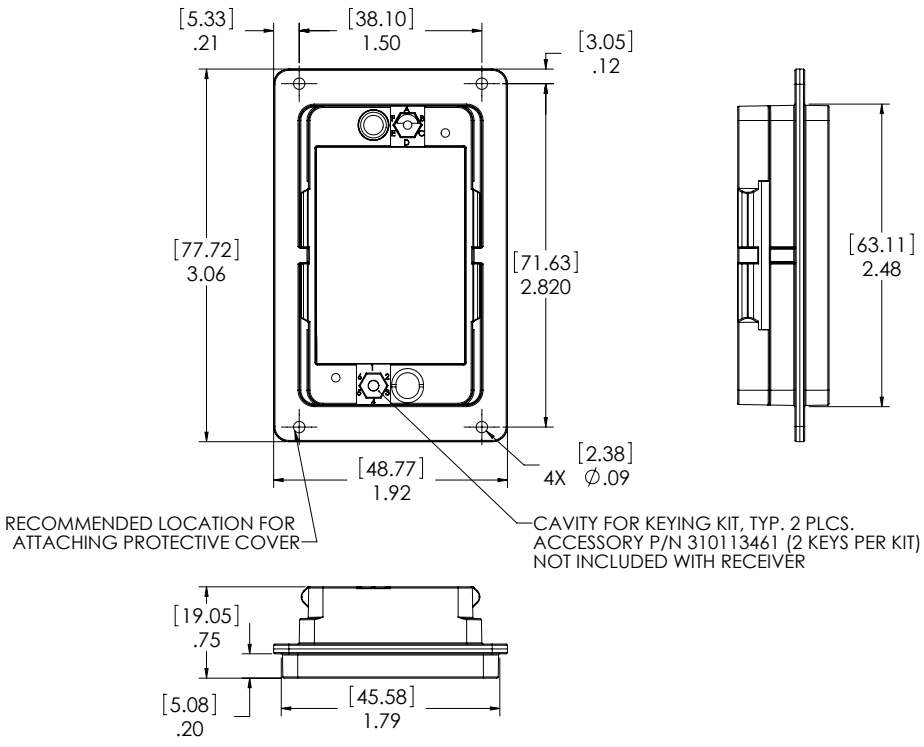

➤ Receiver, i1, with Protective Cover • **Part # 310 128 101**

Receiver Specifications

Weight	.10 lbs [.05 kg] without protective cover
Frame Material	Nickel plated aluminum alloy
Hardware Material	Stainless steel alloy
Protective Cover Material	ABS, black
Available Module Positions	1 position
Cycle Life	10,000 cycles
Temperature	-55° C to 105° C

The i1 receiver accepts a single iCon module and allows a variety of signal, power, coaxial, thermocouple, and fiber optic connections. A protective cover is included with the receiver. Other accessories are available, such as keying pin kits and strain relief.

i1 ITA

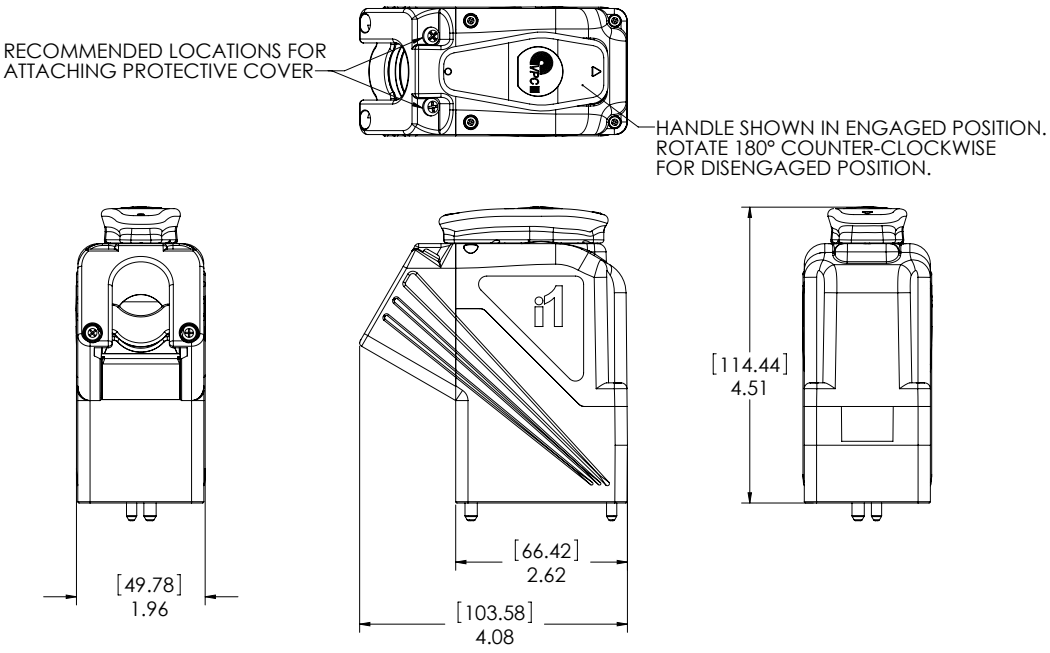

➤ ITA, i1, with Protective Cover • **Part # 410 128 101**

ITA Specifications

Weight	.55 lbs [.25 kg] without protective cover
Frame Material and Clamp Housing	Glass reinforced thermoplastic
Hardware Material	Stainless steel
Latch Material	Nickel plated beryllium copper
Backshell Material	Glass reinforced thermoplastic
Protective Cover Material	ABS, black
Available Module Positions	1 position
Cycle Life	10,000 cycles
Temperature	-55° C to 105° C

The U-shaped cable clamp is adjustable to accommodate the amount of wires in your cable bundle.

The i1 ITA's small width and inboard handle increase side-to-side stackability. The U-shaped cable clamp allows modules to be pre-wired before assembly and can hold cable bundles up to 1.07" diameter. The removable backshell allows easy access to wiring for maintenance and probing. A protective cover is included with the ITA.

i1 ITA with Large Cable Clamp

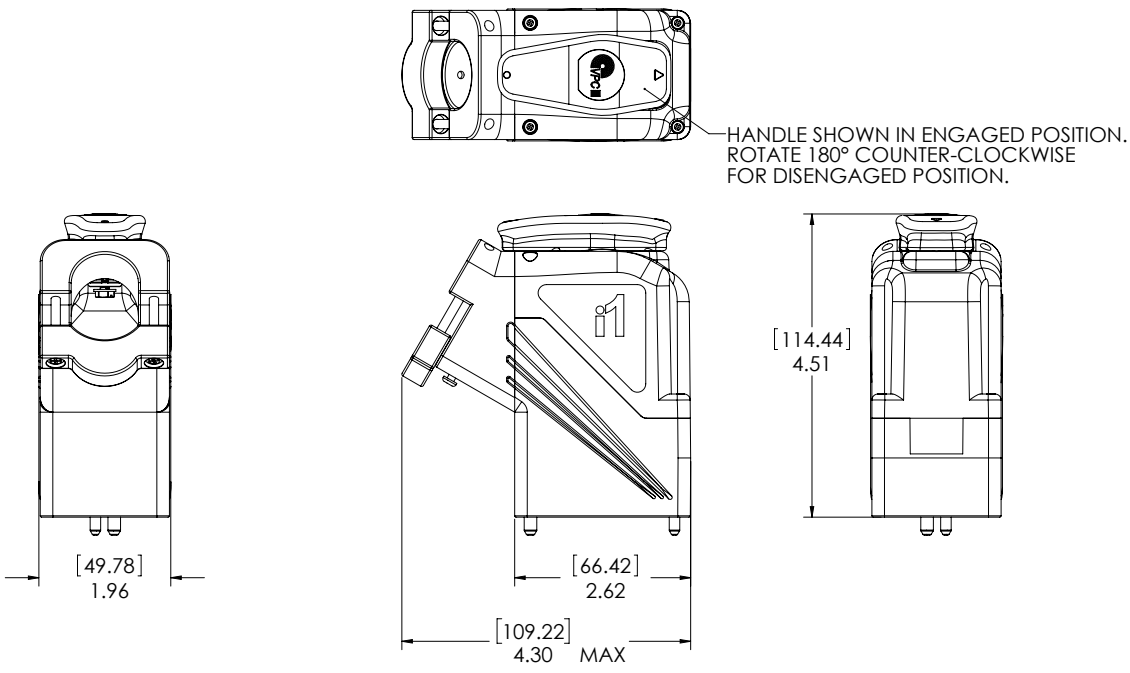

ITA, i1, with Large Cable Clamp and Protective Cover • **Part # 410 128 103**

ITA Specifications

Weight	.55 lbs [.25 kg] without protective cover
Frame Material and Clamp Housing	Glass reinforced thermoplastic
Hardware Material	Stainless steel
Latch Material	Nickel plated beryllium copper
Backshell Material	Glass reinforced thermoplastic
Protective Cover Material	ABS, black
Available Module Positions	1 position
Cycle Life	10,000 cycles
Temperature	-55° C to 105° C

The U-shaped cable clamp is adjustable to accommodate the amount of wires in your cable bundle.

This i1 ITA option provides a larger cable clamp that allows modules to be pre-wired before assembly and can hold cable bundles up to 1.26" diameter. The removable backshell allows easy access to wiring for maintenance and probing. A protective cover is included with the ITA.

i1EMI ITA

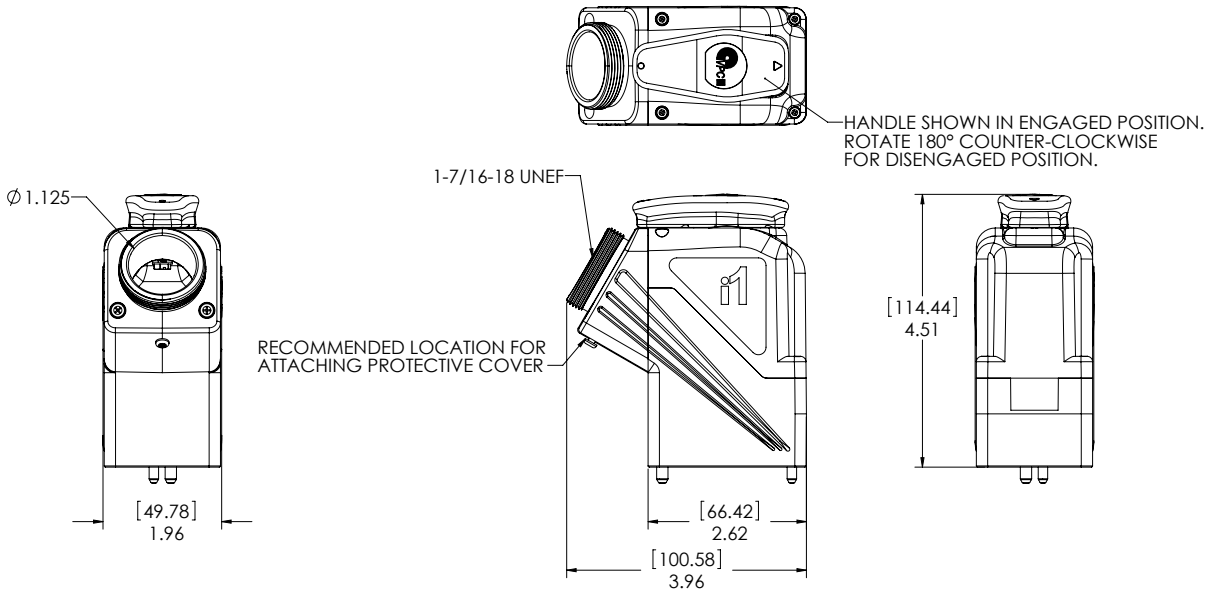

➤ ITA, i1, EMI Shielded, with Protective Cover • **Part # 410 128 102**

ITA Specifications

Weight	.55 lbs [.25 kg] without protective cover
Frame Material and Clamp Housing	Stainless steel filled thermoplastic
Hardware Material	Stainless steel
Latch Material	Nickel plated beryllium copper
Backshell Material	Stainless steel filled thermoplastic
Protective Cover Material	ABS, black
Available Module Positions	1 position
Cycle Life	10,000 cycles
Temperature	-55° C to 105° C

For more information about coupling adapters, backshells and conduits, visit ***vpc.com/backshell***

The i1EMI ITA has many of the standard features of the i1, in addition to EMI protection. The EMI-shielding effect on the i1EMI ITA is provided by the stainless steel fibers in the plastic shell and threaded metal coupling adapter. A protective cover is included with the ITA.

i1 Accessories

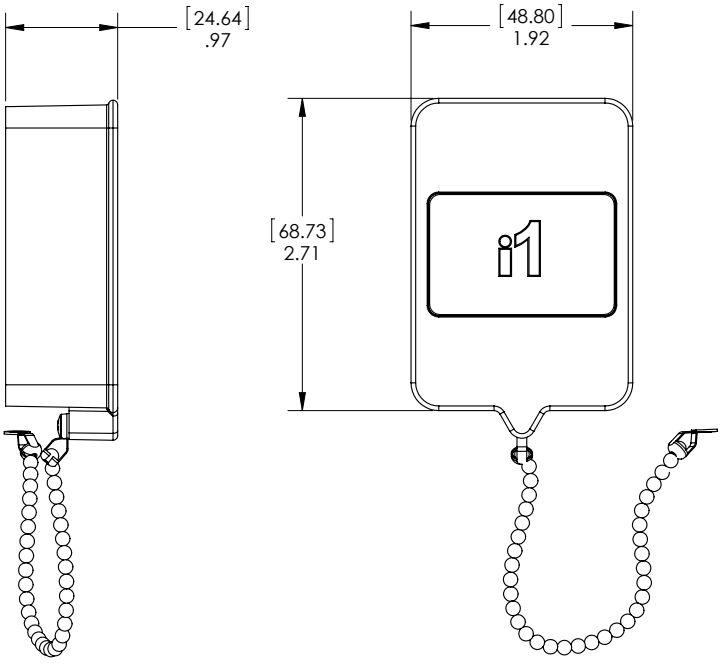

The receiver protective cover protects contacts and modules when the receiver is not in use. The adjustable lanyard can be permanently removed if desired. Shown with beaded chain kit, Part # 310 113 552.

➤ Replacement Protective Cover, i1, Receiver • **Part # 310 113 524**

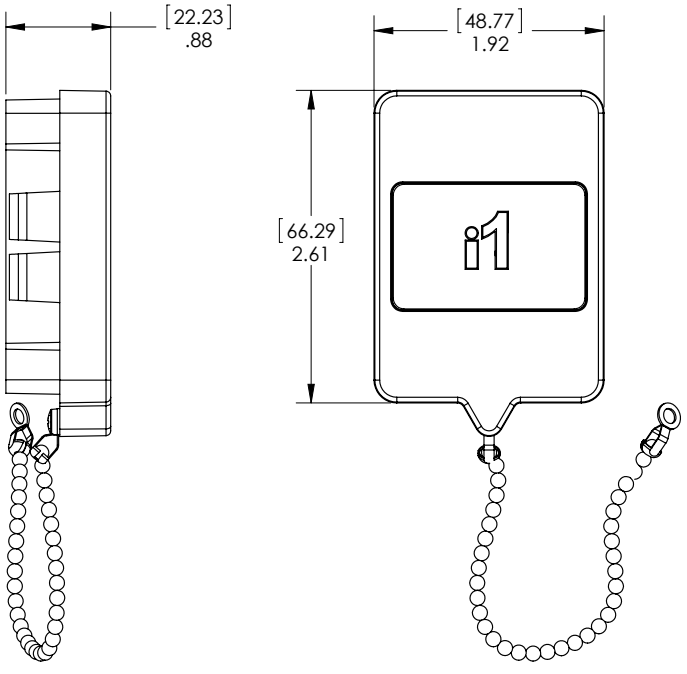

The ITA protective cover protects contacts and modules when the ITA is not in use. The adjustable lanyard can be permanently removed if desired. Shown with beaded chain kit, Part # 310 113 552.

➤ Replacement Protective Cover, i1, ITA • **Part # 410 112 864**

i1 Accessories

The iSeries keying pin kit includes a set of two hex keys. One hex key will allow six different options and two can provide 36 different keying options. The keying kit provides a way to isolate your connectors to prevent operational mismatch.

➤ Keying Pin Kit, iSeries, Receiver and ITA • **Part # 310 113 461**

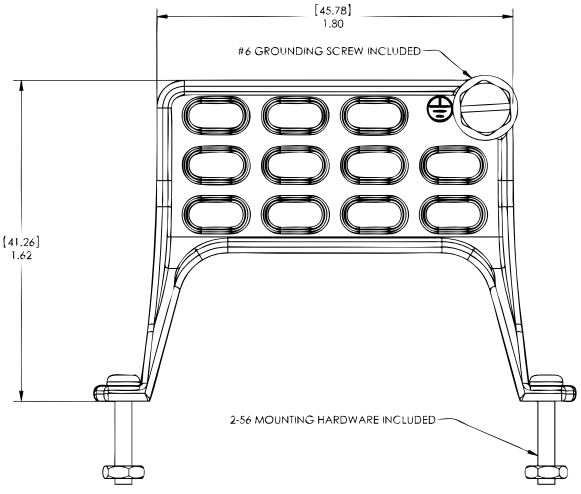

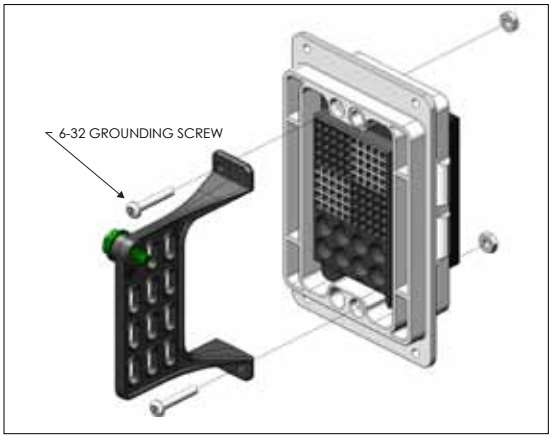

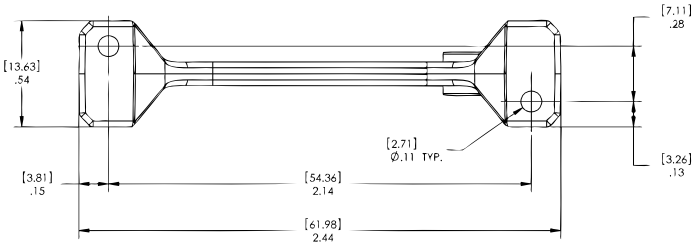

The strain relief plate attaches to the wiring side of the i1 receiver and can be secured before receiver installation. It includes four wire ties and an earth grounding screw.

➤ Strain Relief Plate, i1, Receiver • **Part # 310 113 531**

Discover the Versatility & High Performance

iCon and iConEMI deliver.

Engineered for Test & Measurement

- Rugged engagement mechanism designed for over 10,000 cycles
- Mate up to **320 signal contacts** using QuadraPaddle technology
- Small width and inboard handle increase side-to-side stackability
- Visit **vpc.com/wire** to explore our wiring options

iCon

Convenient Rack & Panel

- Slide-off backshell allows access to probe points while engaged
- Removable U-shaped cable clamp makes it easy to reconfigure wired modules
- Fail-safe features include offset guide pins, recessed ITA contacts, and keying pins

Innovative & Practical Module Features

- PCB-mountable receiver
- Standard modules allow a mix of I/O
- Captive hardware in modules guarantees screws will not be lost
- Rear-mount modules allow for easy installation of pre-wired cable assemblies
- Modules available in coax, power, signal, thermocouple, pneumatic, and fiber optic, including hybrid combinations

EMI Protection Maximizes Shielding Effectiveness

iCon EMI

- "Mate first, break last" feature completes the earth ground circuit
- Earth-ground terminal prevents shock and injury
- EMI-shielding with metallized plastic shielding in the backshell minimizes EMI leaks to and from other sources

Versatility Creates Solutions for Varied Industries

- Ideal for scientific data acquisition applications
- The **iCon HD** option simplifies wire connections with up to 36 HD contacts (75 Ohm coaxial) in a single connector applicable for the entertainment industry
- Meets specialized testing requirements in the automotive industry
- Proven durability in environmental chambers
- **High Power** 150 Amp option

iCon 960

- Provides 960 signal contacts using QuadraPaddle technology
- Various I/O configurations available
- Half-turn quick cam allows easy, precise engagement of receiver and ITA

2 Module Solution • iCon

iCon is a fail-safe rack and panel connector specifically designed for the test and measurement industry. The unique engagement mechanism contains built-in lubrication and spring-loaded locking tabs that guarantee a reliable connection test after test. The iCon receiver is designed to be PCB-compatible.

Features and Benefits

- Hybrid modules enable mix of I/O, including signal, power, coaxial, thermocouple, pneumatic, and fiber optic
- Mate up to 320 signal points with QuadraPaddle technology
- PCB-mountable
- Spring-locking tabs ensure even engagement
- Keying and guide pins ensure proper alignment and prevent incorrect mating
- Removable backshell enables easy access to wire
- Engineered for over 10,000 cycles

iCon Receiver and ITA

iCon Slide Mount Configuration

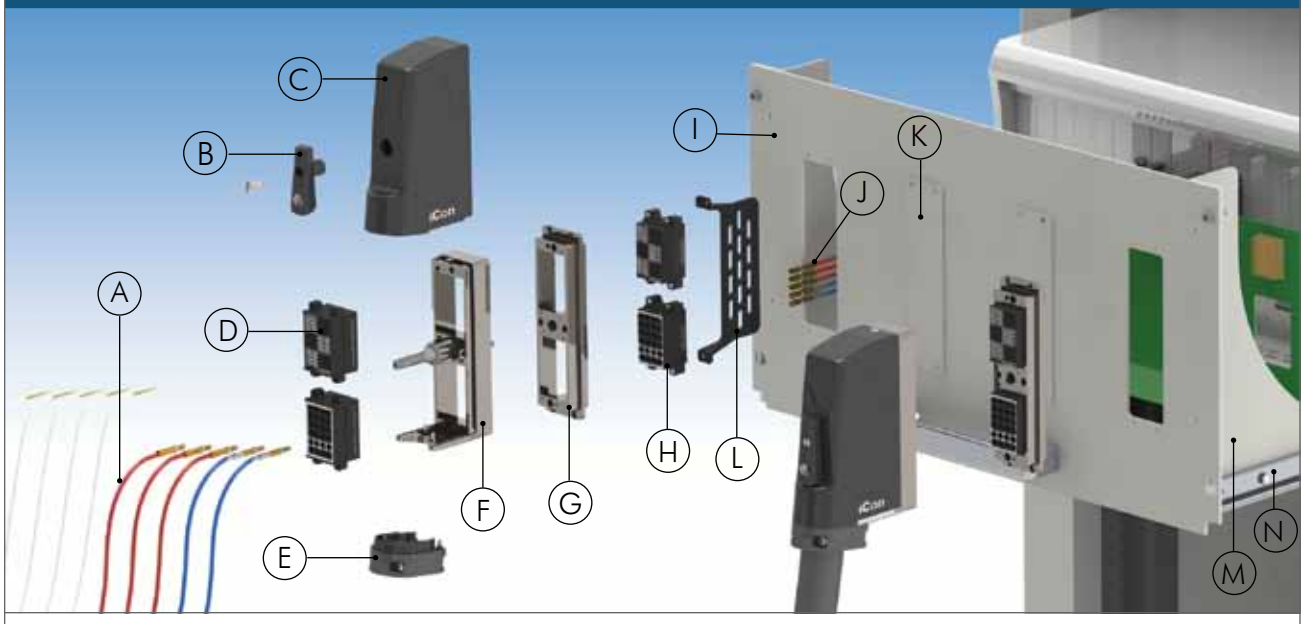

A. ITA Patchcords
B. Engagement Handle
C. Removable Backshell
D. iCon ITA Module
E. U-shaped Cable Clamp
F. iCon ITA Frame
G. iCon Receiver
H. iCon Receiver Module
I. Mounting Panel
J. Receiver Patchcords
K. iCon Cover Plate
L. Strain Relief
M. Mounting Flange
N. Slide Kit

Part #	Description	*Visit VPC.com for full product details*
RECEIVERS		
310 123 101	Receiver, iCon, with Protective Cover (G)	
310 123 102	Receiver, iCon, EMI-Shielded, with Protective Cover and Strain Relief	
310 123 103	Receiver, iCon, Reverse Module Configuration for iCon ITA Modules, with Protective Cover	
ITAS		
410 123 101	ITA, iCon, with Protective Cover (B)(C)(E)(F)	
410 123 102	ITA, iCon, EMI-Shielded, with Threaded Coupling Adapter and Protective Cover	
410 123 106	ITA, iCon, with Large Cable Clamp and Protective Cover	
410 123 122	ITA, iCon with Oversized Backshell	
CABLE ASSEMBLIES		
410 123 593	Cable Assembly, ITA, iCon, QuadraPaddle, 36", Flying Leads	
410 123 607	Cable Assembly, ITA, iCon Hybrid 100/8, QuadraPaddle, Mini Power and Mini Coaxial, 36", Flying Leads	
410 123 669	Cable Assembly, ITA, iCon, QuadraPaddle, 72", Double-Ended	
MOUNTING OPTIONS		
310 113 463	Vertical Hinged Mounting Frame, iCon, 5U, 3 Positions	
310 113 467	Cover Plate, iCon, for Mounting Panel Cutouts, Painted Gray	
310 113 490	Cover Plate, iCon, for Mounting Panel Cutouts, Painted Black	
310 113 301	Fixed Mounting Panel, iCon, 4U, 8 Positions, Painted Gray	
310 113 302	Fixed Mounting Panel, iCon, 4U, 8 Positions, Black Anodized	
310 113 491	Fixed Mounting Panel, iCon, 1U, 2 Positions, Painted Gray	
310 113 488	Fixed Mounting Panel, iCon, 1U, 2 Positions, Black Anodized	
310 113 540	Mounting Panel, iCon, 6U, 4 Positions, with Slide Mounting (slide kit required) (I)(M)	
For other mounting options, please visit vpc.com/products/mounting_options		
SLIDE KITS (N)		
310 113 451	28" Slide Kit, Fits 26"–30" Deep Racks, Supports 180 lbs.	
310 113 411	30" Slide Kit, Fits 28"–32" Deep Racks, Supports 180 lbs.	
310 113 500	36" Slide Kit, Fits 34"–38" Deep Racks, Supports 180 lbs.	
ACCESSORIES		
310 113 461	Keying Pin Kit, iSeries, Receiver and ITA	
310 113 456	Strain Relief Plate, iCon, Receiver (L)	
310 113 582	Strain Relief Stand-off Kit, iCon, Receiver	
310 113 678	Replacement Protective Cover, iCon, Receiver	
410 112 750	Replacement Protective Cover, iCon, ITA	
510 109 572	Strain Relief Plate, iCon High Power, Receiver	

iCon Receiver

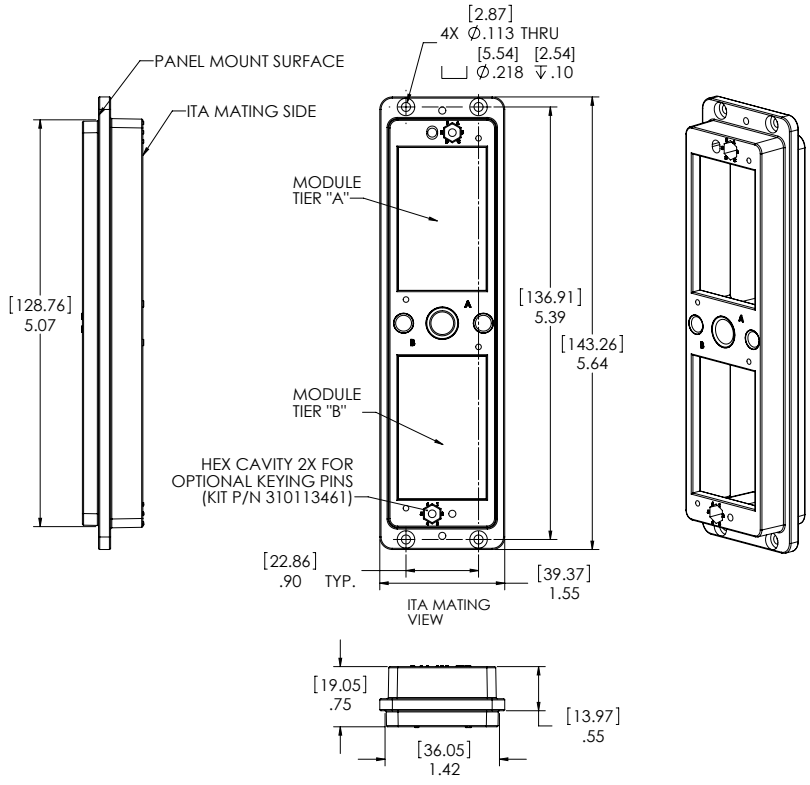

➤ Receiver, iCon, with Protective Cover • **Part # 310 123 101**

Receiver Specifications

Weight	.20 lbs [.09 kg] without protective cover
Frame Material	Nickel plated aluminum alloy
Hardware Material	Stainless steel alloy
Protective Cover Material	ABS, black
Available Module Positions	2 positions
Cycle Life	10,000 cycles
Temperature	-55° C to 125° C

The iCon receiver accepts two modules and allows a variety of signal, power, coaxial, thermocouple, and fiber optic connections. A protective cover is included with the receiver. Other accessories, such as keying pin kits and strain relief, are available.

iConEMI Receiver

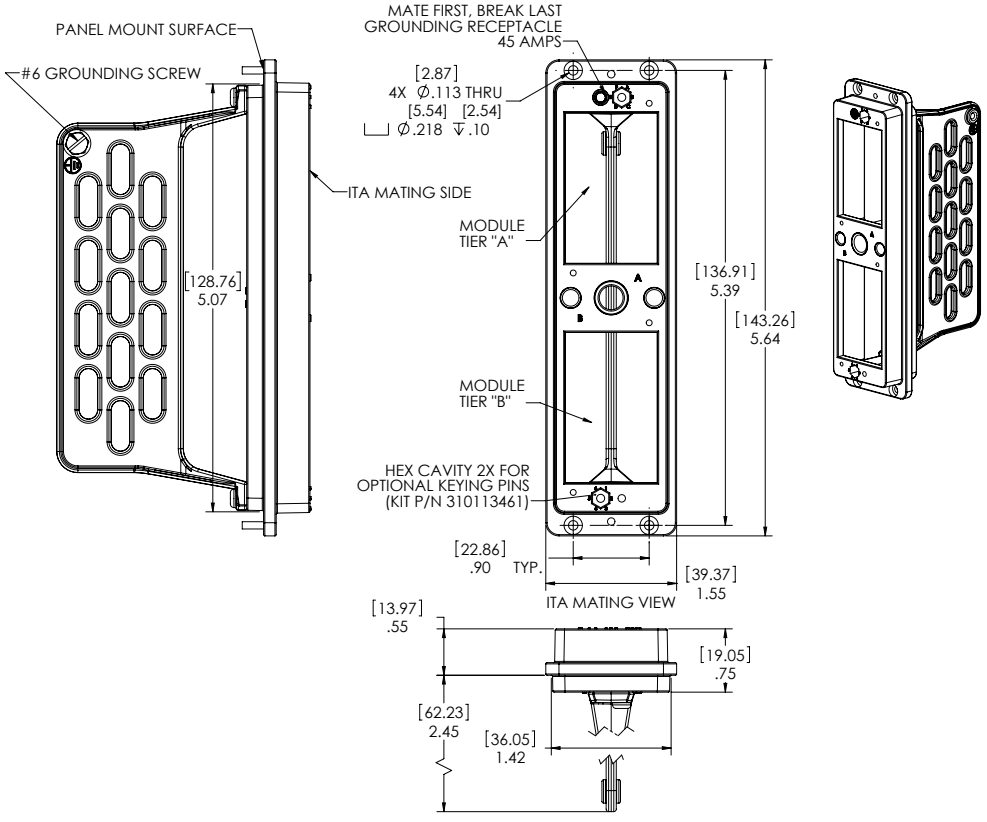

➤ Receiver, iCon, EMI Shielded, with Protective Cover and Straing Relief • **Part # 310 123 102**

Receiver Specifications

Weight	.20 lbs [.09 kg] without protective cover
Frame Material	Nickel plated aluminum alloy
Hardware Material	Stainless steel alloy
Protective Cover Material	ABS, black
Available Module Positions	2 positions
Cycle Life	10,000 cycles
Temperature	-55° C to 125° C

The iConEMI receiver has many of the standard features of the iCon, in addition to EMI protection. A ground terminal is included on the iConEMI receiver. The "mate first, break last" feature connects the earth ground circuit. The ground terminal on the strain relief prevents user shock and injury.

iCon ITA

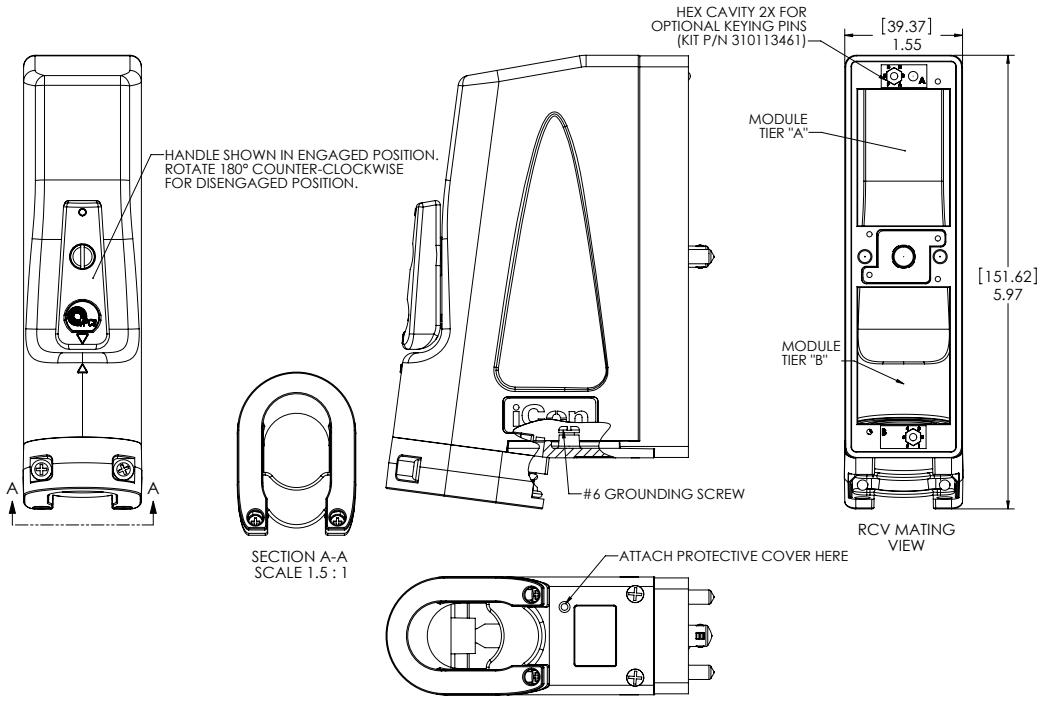

➤ ITA, iCon, with Protective Cover • **Part # 410 123 101**

ITA Specifications

Weight	.65 lbs [.29 kg] without protective cover
Frame Material	Nickel plated aluminum alloy
Hardware Material	Stainless steel alloy
Drive Unit Material	Bronze and stainless steel
Plastic Components and Protective Cover Material	ABS, black
Cable Clamp Material	Powder coated aluminum
Available Module Positions	2 positions
Cycle Life	10,000 cycles
Temperature	-55° C to 125° C

The U-shaped cable clamp is adjustable to accommodate the amount of wires in your cable bundle.

The iCon ITA's small width and inboard handle increase the side-to-side stackability. The U-shaped cable clamp allows modules to be pre-wired before assembly and can hold cable bundles up to 1.21" diameter. The slide-off backshell allows easy access to wiring for maintenance and probing. A protective cover is included with the ITA.

iCon ITA with Large Cable Clamp

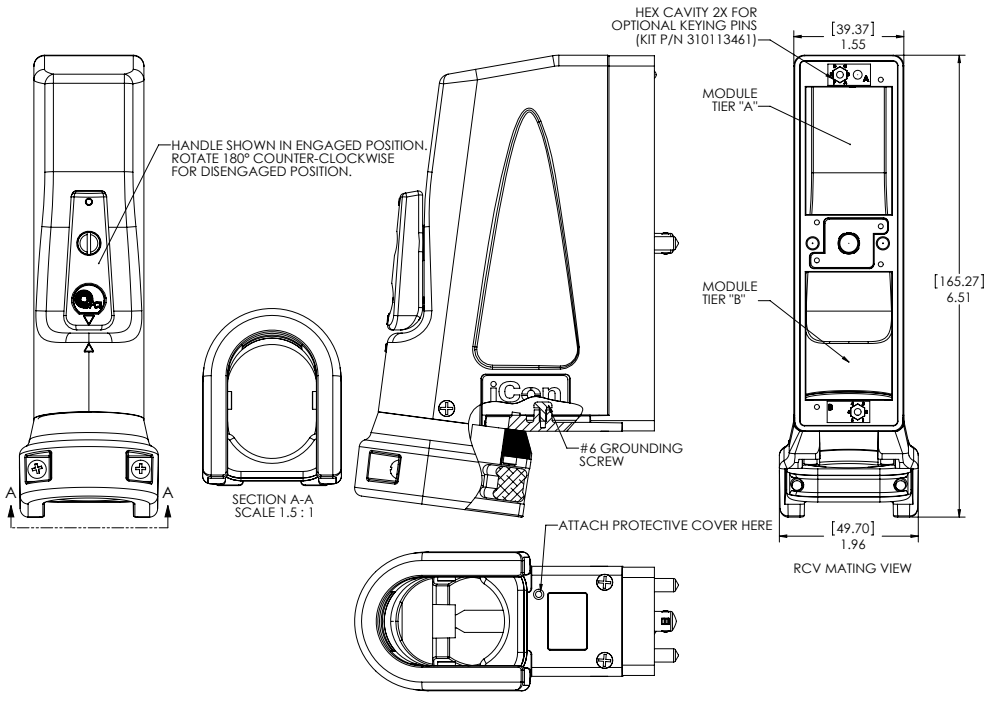

➤ ITA, iCon, with Large Cable Clamp, with Protective Cover • **Part # 410 123 106**

ITA Specifications

Weight	.65 lbs [.29 kg] without protective cover
Frame Material	Nickel plated aluminum alloy
Hardware Material	Stainless steel alloy
Drive Unit Material	Bronze and stainless steel
Plastic Components and Protective Cover Material	ABS, black
Cable Clamp Material	Powder coated aluminum
Available Module Positions	2 positions
Cycle Life	10,000 cycles
Temperature	-55° C to 125° C

The U-shaped cable clamp is adjustable to accommodate the amount of wires in your cable bundle.

This iCon ITA has a large cable clamp that will accommodate cable bundles up to 1.55" diameter. The slide-off backshell allows easy access to wiring for maintenance and probing. A protective cover is included with the ITA.

iCon EMI ITA

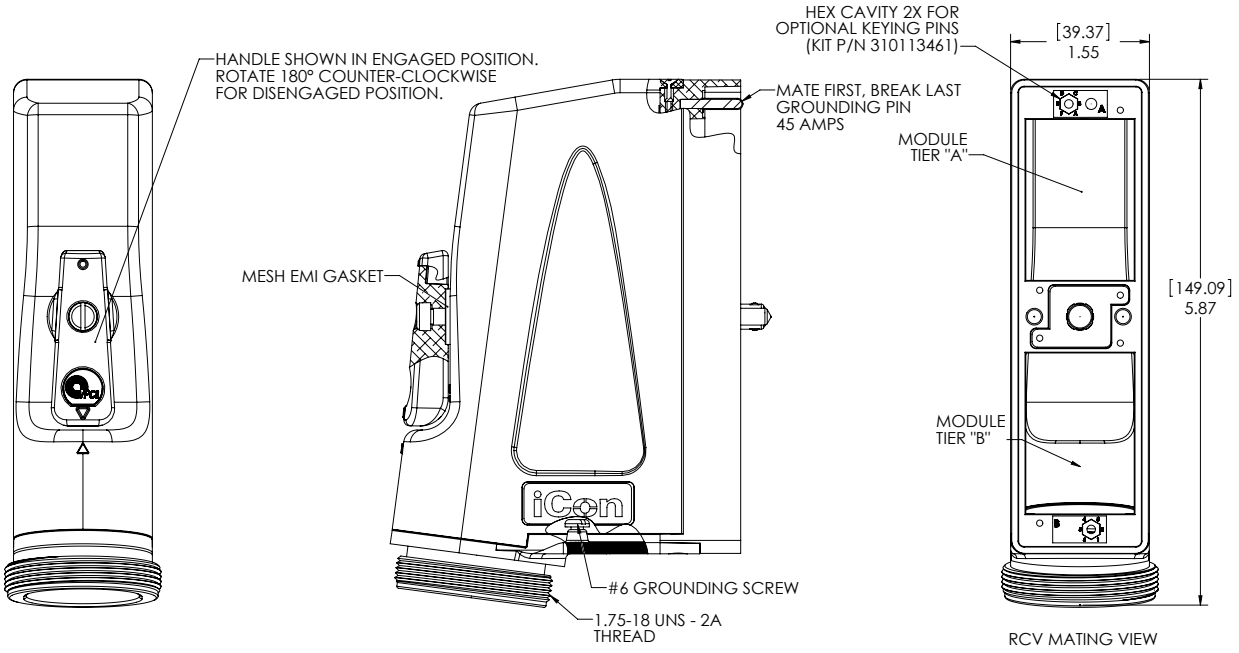

➤ ITA, iCon, EMI Shielded, with Threaded Coupling Adapter and Protective Cover • **Part # 410 123 102**

ITA Specifications

Weight	.65 lbs [.29 kg] without protective cover
Frame Material	Nickel plated aluminum alloy
Hardware Material	Stainless steel
Drive Unit Material	Bronze and stainless steel
Cable Clamp Material	Stainless steel
Plastic Components and Protective Cover Material	Stainless steel filled impact modified nylon
Available Module Positions	2 positions
Cycle Life	10,000 cycles
Temperature	-55° C to 125° C

For more information about coupling adapters, backshells, and conduits, visit **vpc.com/backshell**

The EMI-shielding effect on the iConEMI ITA is provided by the stainless steel fibers in the removable plastic backshell and threaded metal coupling adapter. The opening in the threaded coupling adapter provides clearance for a maximum cable bundle of 1.37" diameter. A protective cover is included with the ITA.

iCon Accessories

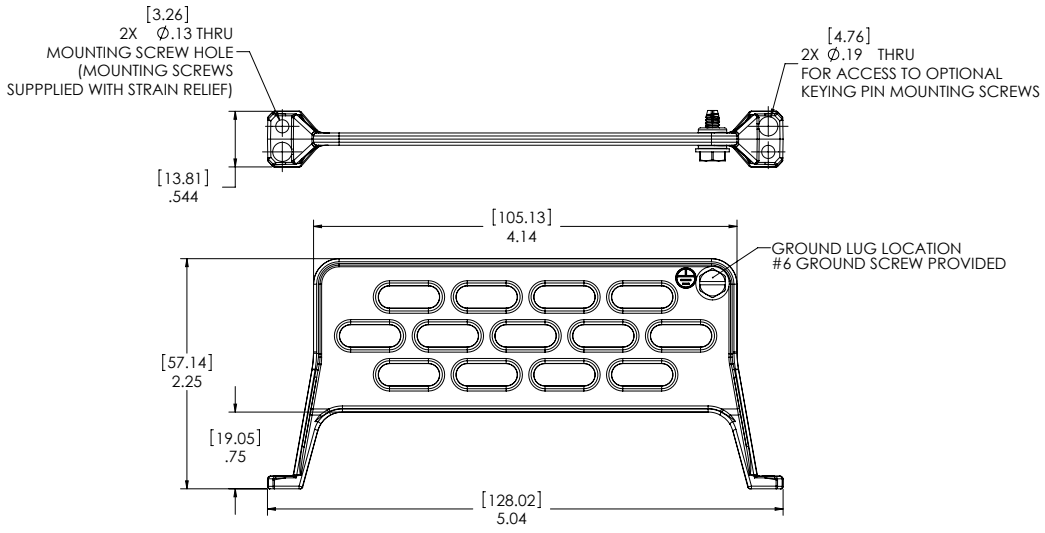

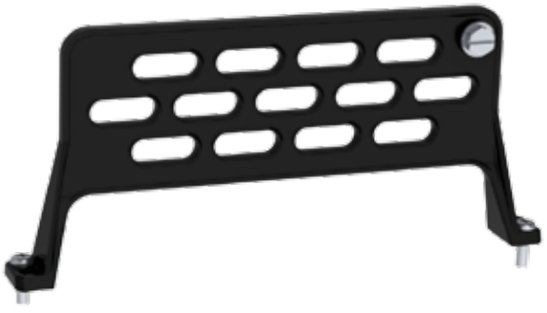

The strain relief plate attaches to the wiring side of the iCon receiver and can be secured before receiver installation. The strain relief is made of black powder coated aluminum. Six wire ties and mounting hardware are included.

➤ Strain Relief Plate, iCon, Receiver • **Part # 310 113 456**

The receiver protective cover protects contacts and modules when the receiver is not in use.

➤ Replacement Protective Cover, iCon, Receiver
Part # 310 113 678

The ITA protective cover protects contacts and modules when the ITA is not in use.

➤ Replacement Protective Cover, iCon, ITA
Part # 410 112 750

High I/O with QuadraPaddle Technology • iCon960

The iCon960 is the next step up for higher I/O requirements. With two 480 position QuadraPaddle modules included, this iCon provides 960 signal contacts for both PCB and discrete wiring. The precision engagement mechanism is the same as the standard iCon, providing reliable connections test after test.

Features and Benefits

- Mate up to 960 signal contacts with QuadraPaddle technology
- Precision engagement mechanism for reliable connections
- Recessed ITA contacts protect your investment
- Spring-locking tabs ensure even engagement
- Keying and guide pins ensure proper alignment and prevent incorrect mating
- Removable backshell allows easy access to wire
- Engineered for 10,000 cycles

iCon960 ITA and Receiver

Functional Test System with iCon960 and iCon

iCon960 Panel Mount Configuration

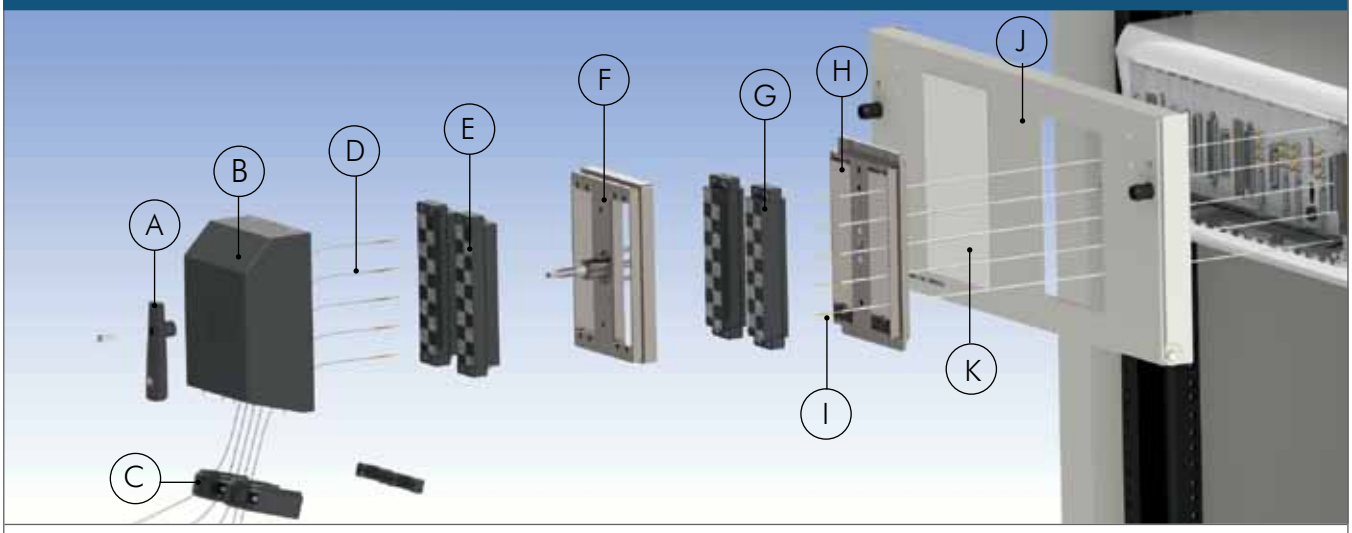

A. Engagement Handle
B. iCon960 Enclosure
C. U-shaped Cable Clamp
D. ITA Patchcords
E. ITA Modules
F. iCon960 ITA Frame
G. Receiver Modules
H. iCon960 Receiver
I. Receiver Patchcords
J. Vertical Hinged Mounting Frame
K. iCon960 Cover Plate

Part #	Description	*Visit VPC.com for full product details*
RECEIVERS (H)		
310 124 102	Receiver, iCon960, 2 QuadraPaddle Modules, Fully Loaded with Twin Female Contacts and Round Posts for PCB Mounting (510 150 135)	
310 124 103	Receiver, iCon960, 2 QuadraPaddle Modules, for Crimp Contacts (510 150 116)	
310 124 105	Receiver, iCon960, 2 QuadraPaddle Modules (510 150 115) and 2 TriPaddle Modules, (510 104 136) for Crimp Contacts	
310 124 112	Receiver, iCon960, 2 QuadraPaddle Modules, Fully Loaded with Twin Female Contacts (510 150 131)	
310 124 117	Receiver, iCon960, 2 TriPaddle Modules (510 104 134 and 510 104 136) and 2 TriPaddle/Mini Power Hybrid Modules (510 104 206)	
310 124 124	Receiver, iCon960, 4 Twinaxial Modules (510 104 155)	
310 124 126	Receiver, iCon960, 2 TriPaddle Modules (510 104 149)	
310 124 128	Receiver, iCon960, 2 QuadraPaddle Modules, for Crimp Contacts (510 150 115) and 2 Mini Coaxial Modules (510 104 120)	
310 124 130	Receiver, iCon960, 1 QuadraPaddle Module (510 150 115) and 3 TriPaddle Modules (510 104 136)	
310 124 131	Receiver, iCon960, 2 QuadraPaddle Modules, Fully Loaded with Twin Female Contacts and Square Posts for Wire Wrap (510 150 147)	
310 124 132	Receiver, iCon960, 1 TriPaddle/Mini Power Module (510 104 206), 2 QuadraPaddle Modules (510 150 115 and 510 150 116)	
ITAS (F)		
410 124 103	ITA, iCon960, 2 QuadraPaddle Modules, Fully Loaded with Twin Male Contacts and Round Posts for PCB Mounting (510 151 108)	
410 124 104	ITA, iCon960, 2 QuadraPaddle Modules, for Crimp Contacts (510 151 106)	
410 124 105	ITA, iCon960, 2 QuadraPaddle Modules (510 151 105) and 2 TriPaddle Modules (510 108 126) for Crimp Contacts	
410 124 117	ITA, iCon960, 2 TriPaddle Modules (510 108 101 and 510 108 126) and 2 TriPaddle/Mini Power Hybrid Modules (510 108 178)	
410 124 129	ITA, iCon960, 4 Twinaxial Modules (510 108 138)	
410 124 137	ITA, iCon960, 2 TriPaddle Modules (510 108 131)	
410 124 139	ITA, iCon960, 2 QuadraPaddle Modules, for Crimp Contacts (510 151 105) and 2 Mini Coaxial Modules (510 108 111)	
410 124 143	ITA, iCon960, 1 QuadraPaddle Module (510 151 105) and 3 TriPaddle Modules (510 108 126)	
410 124 146	ITA, iCon960, 2 QuadraPaddle Modules (510 151 105 and 510 151 106), and 1 TriPaddle/Mini Power Module (510 108 178)	
MOUNTING OPTIONS		
310 113 465	Vertical Hinged Mounting Frame, iCon960, 5U, 2 Positions (J)	
310 113 466	Cover Plate, iCon960, for Vertical Hinged Mounting Frame (K)	
310 113 627	Mounting Panel, iCon960, 1 Position, with Slide Mounting (slide kit required)	
For other mounting options, please visit vpc.com/products/mounting_options		
ACCESSORIES		
310 113 489	Protective Cover, iCon960, Receiver	
410 112 804	Protective Cover, iCon960, ITA	
310 113 461	Keying Pin Kit, iSeries, Receiver and ITA	
410 112 775	Enclosure, iCon960, with 2 Cable Clamps	

iCon960 Receiver

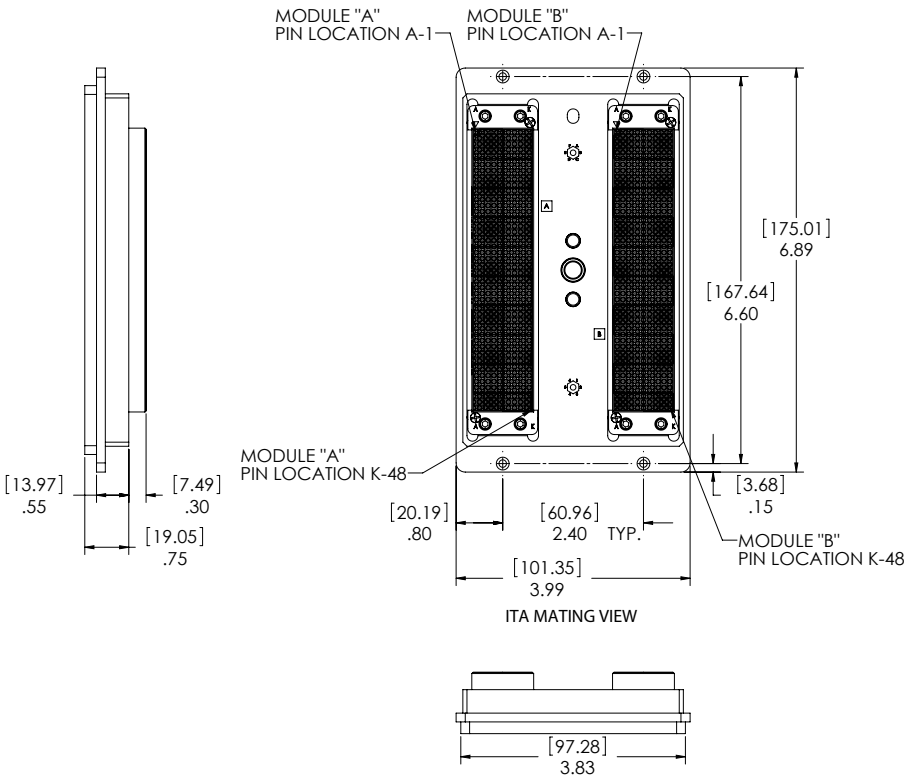

➤ Receiver, iCon960, 2 QuadraPaddle Modules, for Crimp Contacts (510 150 116) • **Part # 310 124 103**

Receiver Specifications

Weight	1.3 lbs [.58 kg]
Frame Material	Nickel plated aluminum alloy
Hardware Material	Stainless steel alloy
Modules Included	510 150 116 (2)
Cycle Life	10,000 cycles
Temperature	–55° C to 100° C

This iCon960 receiver includes two 480 position QuadraPaddle modules Part # 510 150 116 to allow a maximum I/O of 960 signal points.

iCon960 Receiver Loaded with Twin Female Contacts

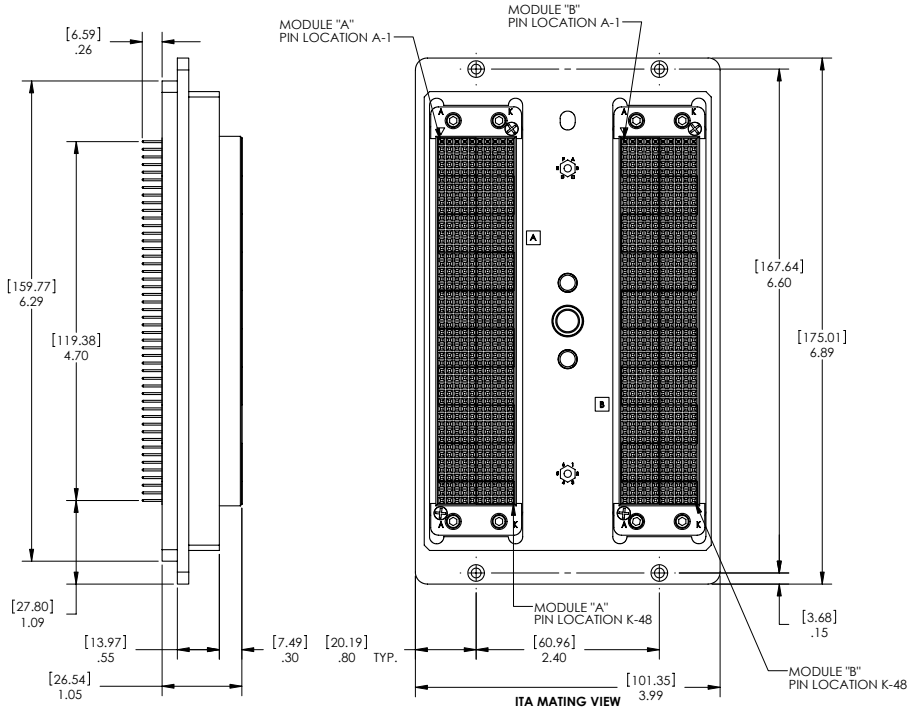

➤ Receiver, iCon960, 2 QuadraPaddle Modules, Fully Loaded with Twin Female Contacts and Square Posts for Wire Wrap (510 150 147) • **Part # 310 124 131**

Receiver Specifications

Weight	1.3 lbs [.58 kg]
Frame Material	Nickel plated aluminum alloy
Hardware Material	Stainless steel alloy
Drive Unit Material	Beryllium copper and stainless steel
Modules Included	510 150 147 (2)
Cycle Life	10,000 cycles
Temperature	–55° C to 100° C

This iCon960 receiver is pre-configured with 960 twin female QuadraPaddle contacts Part # 610 138 100.

iCon960 ITA

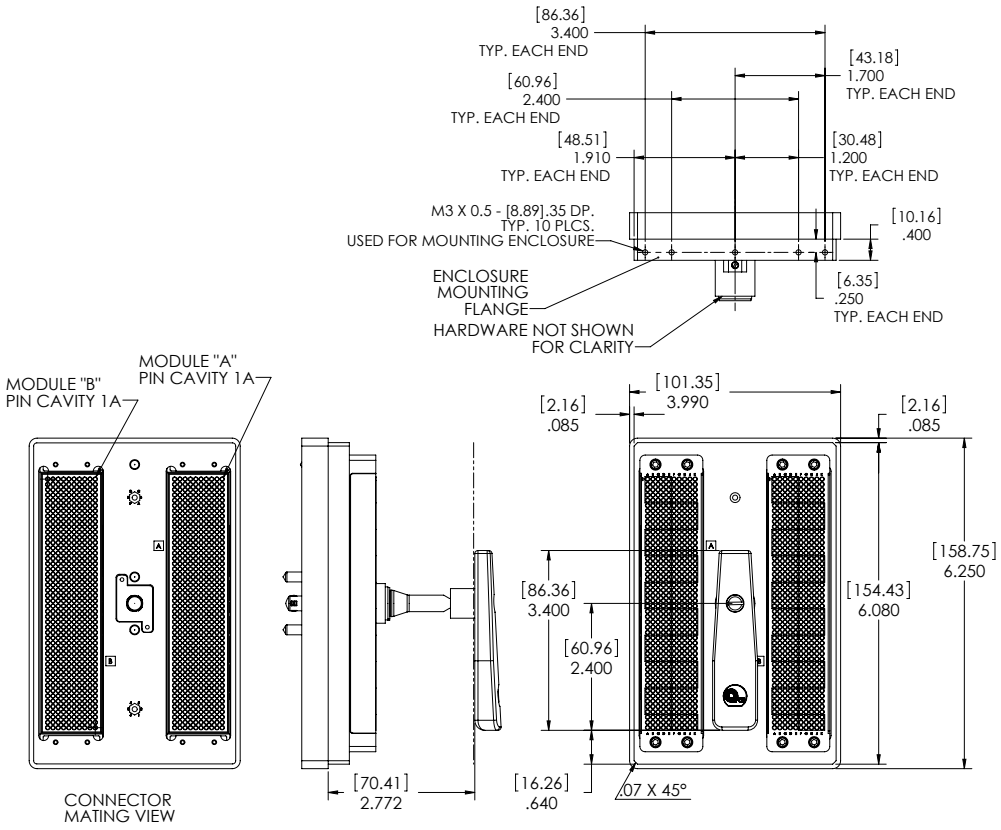

➤ ITA, iCon960, 2 QuadraPaddle Modules, for Crimp Contacts (510 151 106) • **Part # 410 124 104**

ITA Specifications

Weight	1.3 lbs. [.58 kg]
Frame Material	Nickel plated aluminum alloy
Hardware Material	Stainless steel alloy
Drive Unit Material	Beryllium copper and stainless steel
Modules Included	510 151 106 (2)
Cycle Life	10,000 cycles
Temperature	–55° C to 100° C

This iCon960 ITA includes two 480 position QuadraPaddle modules Part # 510 151 106 to allow a maximum I/O of 960 signal points. The ITA uses the same half-turn quick cam engagement mechanism as the standard iCon connectors.

iCon960 Accessories

The standard iCon960 ITA enclosure has two U-shaped cable clamps that allow a maximum cable bundle of 1.55" diameter per clamp.

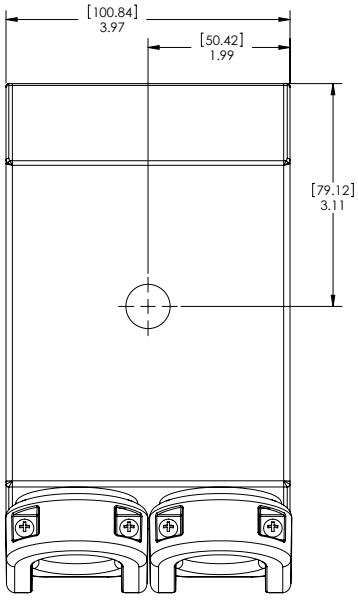

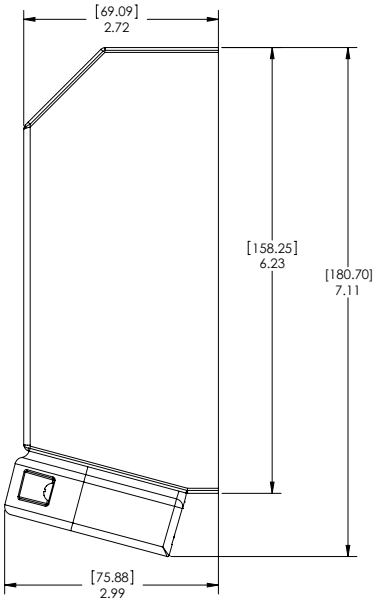

➤ Enclosure, ITA, iCon960, with 2 Cable Clamps • **Part # 410 112 775**

The receiver protective cover protects contacts and modules when the receiver is not in use.

➤ Protective Cover, iCon960, Receiver • **Part # 310 113 489**

The ITA protective cover protects contacts and modules when the ITA is not in use.

➤ Protective Cover, iCon960, ITA • **Part # 410 112 804**

Reveal the Possibilities
with G2, G6 and G10 Solutions.

G2

Compact, High Density Solution

- Ideal for applications requiring a mix of I/O, with various module configurations available
- Mate over 400 (G2), 1,400 (G6), or 2,400 (G10) signal contacts in one application
- Provide outstanding performance in various applications

G6

Slide-off Backshell

- Slide off the backshell for easy wiring access
- Built-in cable clamps for securing all types of wiring

Variety of Uses

- Easy to use in rack or chassis mount applications
- Designed for use with VPC's Vertical Hinged Mounting Frame, fixed panels or slide mount
- Optional keying pin kit distinguishes between multiple ITAs to avoid operational mismatch

G10

Standard QuadraTrack™

- Engaging mechanism in the form of a pair of precision machined slides located in the receiver
- Distributes uniform pressure to four points on the ITA during engagement and disengagement
- Precise signal integrity between the receiver and ITA is maintained by QuadraTrack™ engagement system

Multiple Mounting Options

- Vertical Hinged Mounting Frames enable hinge down access to instrumentation and wiring
- Slide mount option for the G10 allows the receiver and instrumentation to slide out for easy access to the instrument chassis
- Reduce cable length and time spent troubleshooting test system (applies to slide mount option)

2 Module Solution • G2

The G2 offers the reliability of VPC InterConnect technology in a high-density, compact package. Simultaneously engaging a wide range of InterConnect options in multiple configurations, the G2 provides a rapid alternative to repeated connect and disconnect of individual leads and connectors in a rugged, reliable system.

Features and Benefits

- Precision engagement mechanism engineered to mate over 400 contacts
- Cable mount ITA includes EMI-shielded backshell that slides off to allow easy access to wiring
- Standard ITA frames accommodate multiple enclosure types for a variety of fixture options
- Available keying kit distinguishes between multiple G2s used in the same application
- Modular and reconfigurable for evolving tests requirements
- Reliable connectivity beyond 20,000 cycles
- Quick and easy integration and maintenance
- Wide range of I/O options including signal, coaxial, power, pneumatic, vacuum, thermocouple, fiber optic, and PCB solutions

G2 Receiver and ITA

G2 Panel Mount Configuration

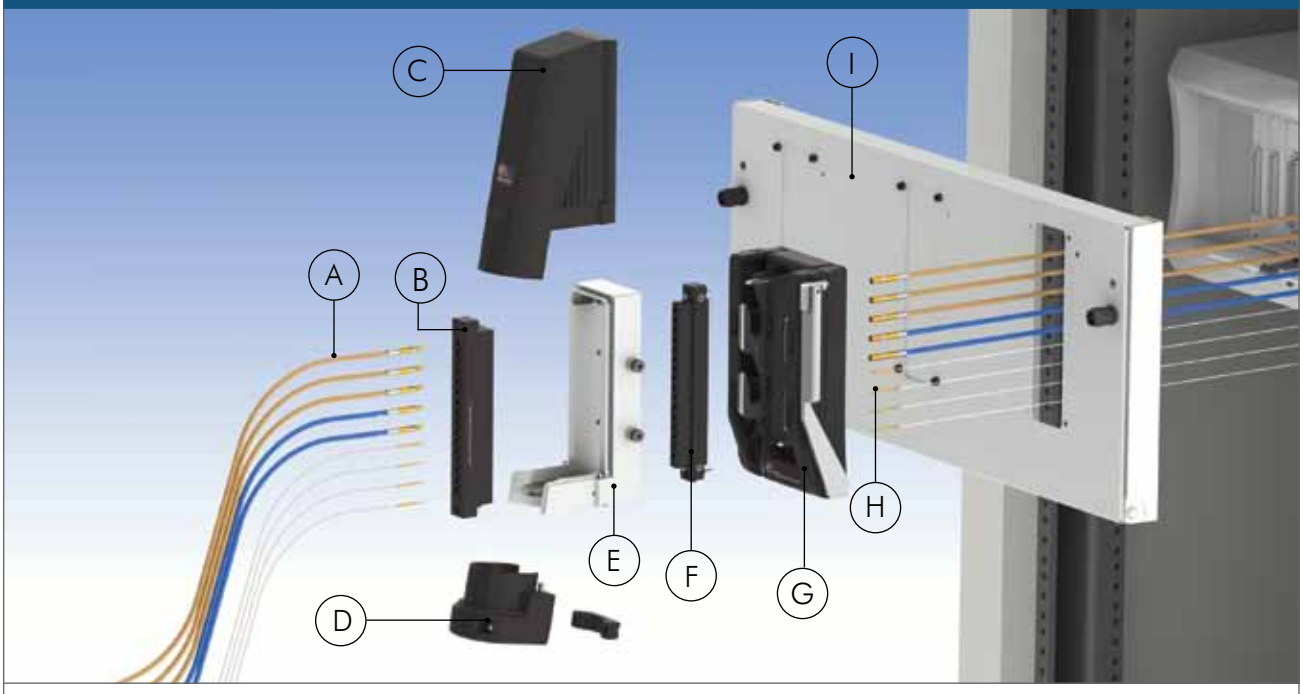

A. ITA Patchcords
B. ITA Module
C. ITA Removable Cover
D. U-shaped Cable Clamp
E. G2 ITA
F. Receiver Module
G. G2 Receiver
H. Receiver Patchcords
I. Vertical Hinged Mounting Frame

Part #	Description	*Visit VPC.com for full product details*

RECEIVER

310 120 110	Receiver, G2, 2 Module, Keying Feature, with Protective Cover Ⓖ
310 120 112	Receiver, G2, 2 Module, Keying Feature, with Protective Cover, with Microswitch

ITAS

410 120 110	ITA with Removable Cover, G2, 2 Module, Keying Feature, with Protective Cover ⒺⒸⒹ
410 120 112	ITA, G2, 2 Module
410 120 120	ITA, G2, 2 Module with 10 Module Enclosure and Adapter Plate, with Protective Cover

ENCLOSURE

410 112 686	Enclosure, 2 Module (for ITA Part # 410 120 112)

If you do not see an enclosure that meets your needs, please visit vpc.com/products/enclosures for more options.

MOUNTING OPTIONS

310 113 391	Vertical Hinged Mounting Frame, G2, 5U, 3 Position (2 Blank Plates Included) Ⓘ
310 113 358	Vertical Hinged Mounting Frame, 5U, Blank
310 113 395	Fixed Mounting Panel, G2, 5U, 3 Position (2 Blank Plates Included)

For other mounting options, please visit vpc.com/products/mounting_options

ACCESSORIES

310 113 394	Replacement Protective Cover, G2, Receiver
410 112 680	Replacement Protective Cover, G2, ITA
310 113 371	Chassis Mount Kit for Pickering 40-908, 40-914, 40-918
310 113 417	Chassis Mount Kit for National Instruments Chassis (PXI-1044/1045/1065 and PXIe-1065/1075)
310 113 589	Chassis Mount Kit for Keysight M9018A Chassis
310 118 112	Keying Pin Kit, Receiver/ITA
410 112 599	Threaded Coupling Adapter, G2, G6, G10, ITA, for Conduit Harnessing Assemblies/Clamps

** For Cable Assemblies, Mating Modules, Patchcords - Visit VPC's Configurators at vpc.com/wire*

2 Module Solution • G2 Receiver

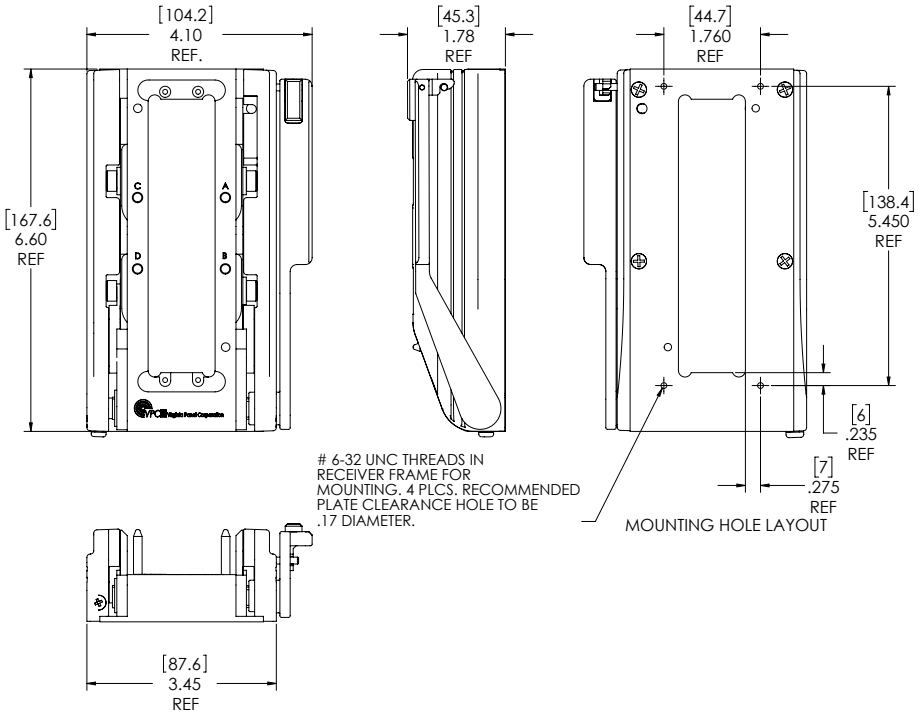

➤ Receiver, G2, 2 Module, Keying Feature, with Protective Cover • **Part # 310 120 110**

Receiver Specifications

Weight	1.82 lbs [.82 kg]
Side Material	ABS-polycarbonate blend
Frame Material	Anodized aluminum
Slide Material	Nickel plated steel
Linkage, Handle, Latch Material	Stainless steel
Available Module Slots	2 positions
Cycle Life	20,000 cycles
Temperature	–55° C to 85° C
Max. Weight Support	25 lbs @ 6" [11 kg @ 15.24 cm]

The G2 receiver is equipped with a locking handle and nickel plated steel slides that engage up to 400 contact points. It allows a high amount of I/O within a compact and rugged device. A protective cover is included with the receiver.

2 Module Solution • G2 ITA with Removable Cover

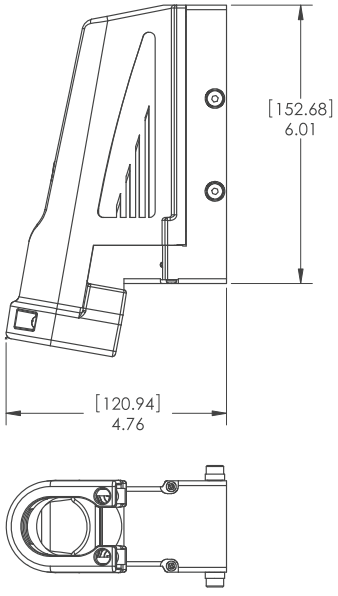

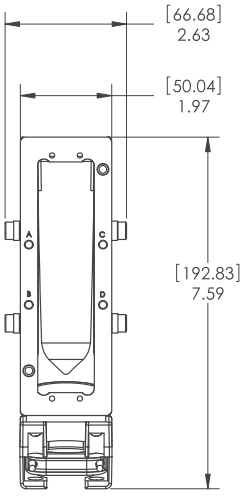

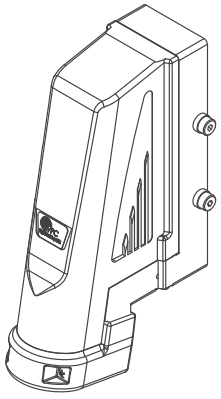

SHOWN WITH INCLUDED PROTECTIVE COVER.

➤ ITA with Removable Cover, G2, 2 Module, Keying Feature, with Protective Cover • **Part # 410 120 110**

ITA Specifications

Weight	1.65 lbs [.75 kg]
Cover Material	EMI-shielded nylon
Frame Material	Nickel plated zinc alloy
Available Module Slots	2 positions
Cycle Life	20,000 cycles
Temperature	–55° C to 85° C

The U-shaped cable clamp is adjustable to accommodate the amount of wires in your cable bundle.

The G2 ITA is equipped with a removable EMI-shielded backshell. The backshell slides up to provide access to wires and connectors and is secured by two screws. The removable and adjustable U-shaped cable clamp is attached by screws to the ITA frame. A protective cover is included with the ITA.

2 Module Solution • G2 ITA

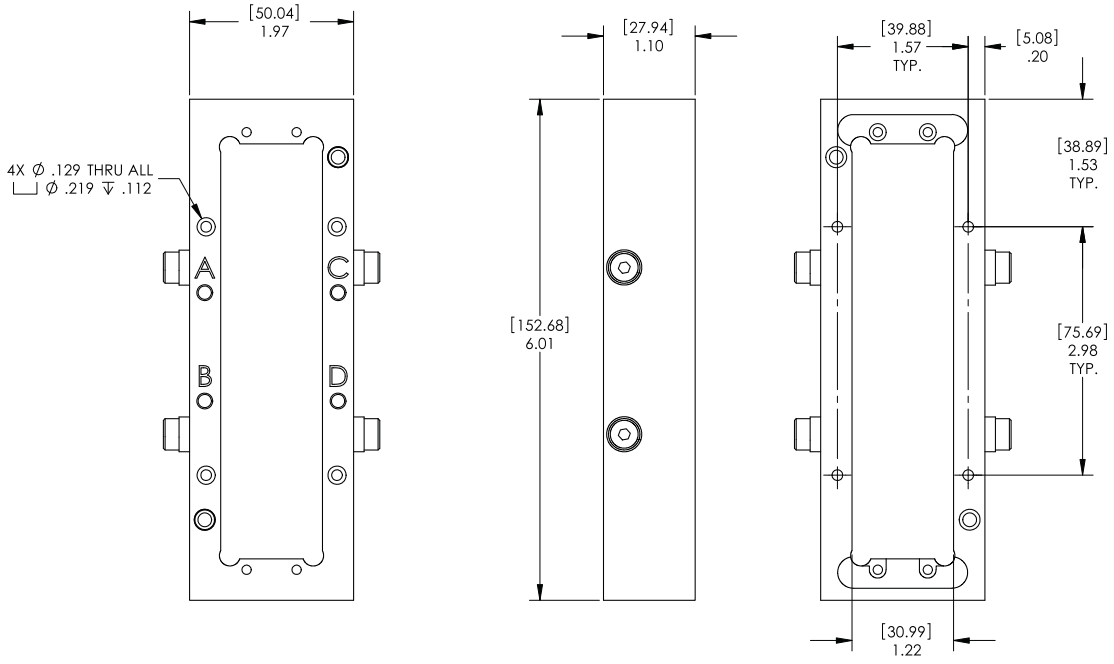

➤ ITA, G2, 2 Module • **Part # 410 120 112**

ITA Specifications

Weight	.61 lbs [.28 kg]
Frame Material	Chromated aluminum
Available Module Slots	2 positions
Cycle Life	20,000 cycles
Temperature	–55° C to 85° C

The performance and versatility of the two module ITA with keying feature present a convenient alternative to limited low I/O connectors. The aluminum frame has through-holes to mount an enclosure or other custom components to the wiring side of the ITA.

2 Module Solution • G2 Accessories

The receiver protective cover protects contacts and modules when the receiver is not in use.

- Replacement Protective Cover, G2, Receiver
  Part # 310 113 394

The vinyl ITA protective cover protects contacts and modules when the ITA is not in use.

- Replacement Protective Cover, G2, ITA
  Part # 410 112 680

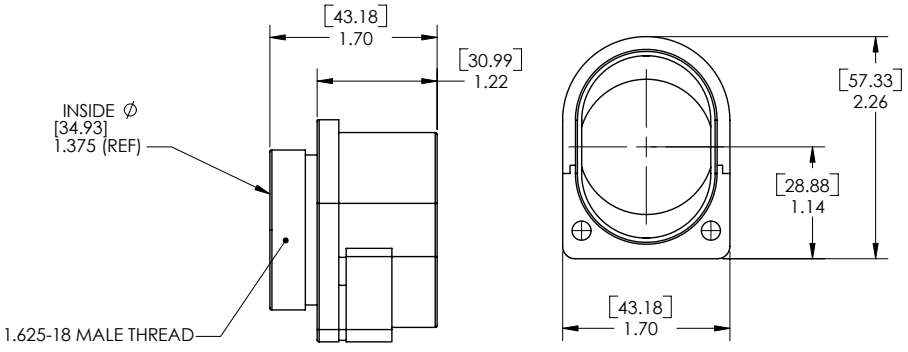

The threaded coupling adapter is designed to accommodate military and commercial circular backshells for conduit or strain relief when designing for general and heavy-duty applications. The male thread size is 1.625"-18".

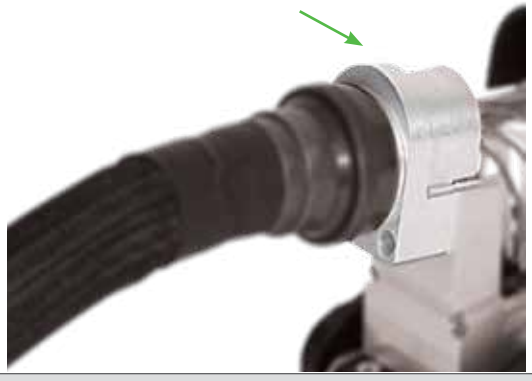

- Threaded Coupling Adapter, G2, G6, G10, ITA, for Conduit Harnessing Assemblies/Clamps
  Part # 410 112 599

6 Module Solution • G6

The six module solution provides versatility on a small footprint. This small, high-density InterConnect can simultaneously engage over 1,400 signal contacts. The adaptable G6 integrates a wide variety of I/O options in various module configurations. The contacts are incorporated into cable assemblies for specific instruments. The Vertical Hinged Mounting Frame is suitable for rack or chassis mount applications and offers quick access to resources and cables. The ITA has a unique, removable, EMI-shielded backshell which allows easy access to the modules and contacts.

Features and Benefits

- Precision engagement mechanism engineered to mate over 1,400 contacts
- Cable mount ITA includes EMI-shielded backshell that slides off to allow easy access to wiring
- Cable mount ITA accepts standard circular cable adapters
- Standard ITA frames accommodate multiple enclosure types for a variety of fixture options
- Optional keying kit distinguishes between multiple G6s used in the same application
- Modular and reconfigurable for evolving tests requirements
- Reliable connectivity beyond 20,000 cycles
- Quick and easy integration and maintenance
- Wide range of I/O options including signal, coaxial, power, pneumatic, vacuum, thermocouple, fiber optic, and PCB solutions

G6 Receiver and ITA

G6 Mounted to Vertical Hinged Mounting Frame

G6 Panel Mount Configuration

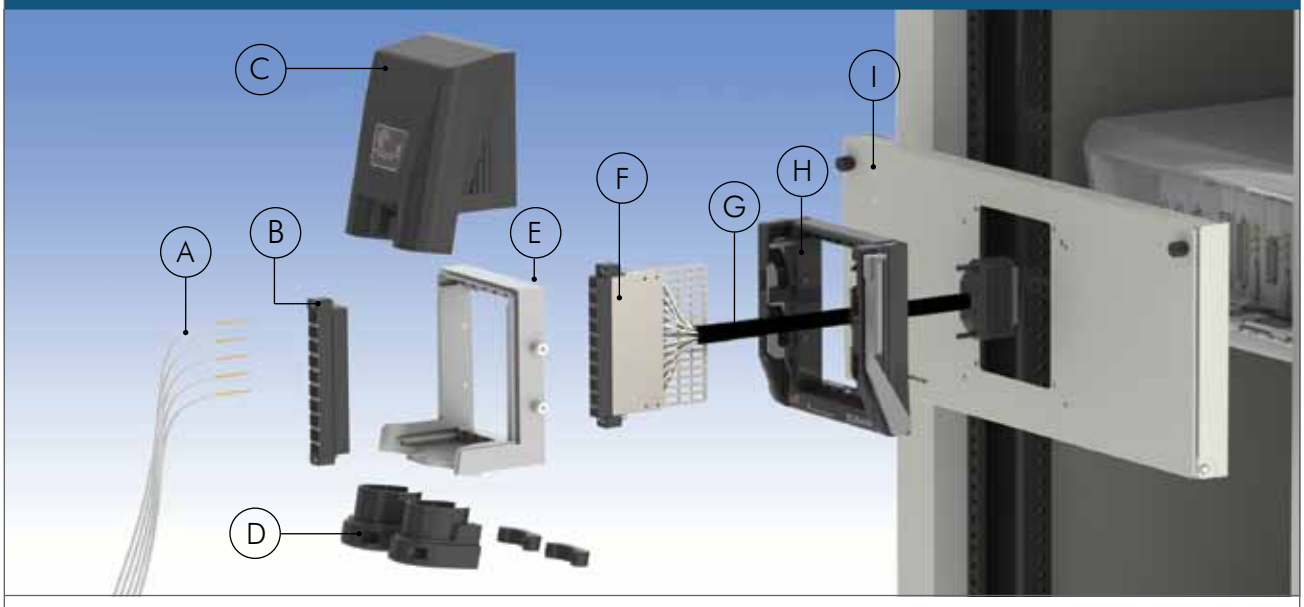

A. ITA Patchcords
B. ITA Module
C. ITA Removable Cover
D. U-shaped Cable Clamp
E. G6 ITA
F. Receiver Module
G. Cable Assembly
H. G6 Receiver
I. Vertical Hinged Mounting Frame

Part #	Description	*Visit VPC.com for full product details*

RECEIVERS

310 104 318	Receiver, G6, 6 Module with Keying Feature (H)
310 104 344	Receiver, G6, 6 Module with Keying Feature and EMI Gasket
310 104 419	Receiver, Two G6, 6 Module, with Slide Mounting (slide kit required)

ITAS

410 104 273	ITA, G6, 6 Module, Keying Feature, with Protective Cover (E)(C)(D)
410 104 118	ITA, 9006, 6 Module
410 104 331	ITA, G6, 6 Module
410 104 288	ITA, G6, 6 Module, for EMI

ENCLOSURE

410 112 401	Enclosure, 6 Module, 4" Deep with Hinge (for ITA Part # 410 104 331)

If you do not see an enclosure that meets your needs, please visit vpc.com/products/enclosures for more options.

MOUNTING OPTIONS

310 113 341	Vertical Hinged Mounting Frame, G6, 5U, 1 Position (I)
310 113 397	Vertical Hinged Mounting Frame, G6, 5U, 2 Positions
310 113 358	Vertical Hinged Mounting Frame, 5U, Blank

For other mounting options, please visit vpc.com/products/mounting_options

ACCESSORIES

310 113 158	Protective Cover, G6, Receiver
410 112 684	Replacement Protective Cover, G6, ITA
310 104 450	Handle Extension, G6, Receiver
310 113 371	Chassis Mount Kit for Pickering 40-908, 40-914, 40-918
310 113 417	Chassis Mount Kit for National Instruments Chassis (PXI-1044/1045/1065 and PXIe-1065/1075)
310 113 589	Chassis Mount Kit for Keysight M9018A Chassis
310 118 112	Keying Pin Kit, Receiver/ITA
410 112 599	Threaded Coupling Adapter, G2, G6, G10, ITA, for Conduit Harnessing Assemblies/Clamps

** For Cable Assemblies, Mating Modules, Patchcords - Visit VPC's Configurators at vpc.com/wire*

6 Module Solution • G6 Receiver

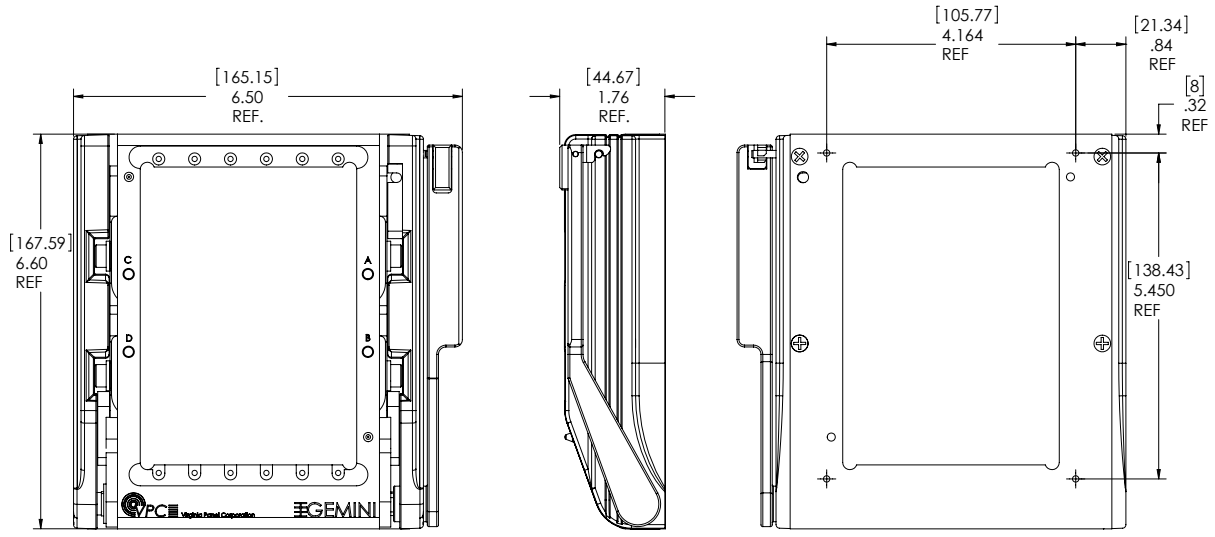

➤ Receiver, G6, 6 Module, Keying Feature • **Part # 310 104 318**

Receiver Specifications

Weight	1.94 lbs [.88 kg]
Side Material	ABS-polycarbonate blend
Frame Material	Anodized aluminum
Slide Material	Nickel plated steel
Linkage, Handle, Latch Material	Stainless steel
Available Module Slots	6 positions
Cycle Life	20,000 cycles
Temperature	–55° C to 85° C
Max. Weight Support	25 lbs @ 6" [11 kg @ 15.24 cm]
Max. Mating Force	630 lbs [285.8 kg]

The G6 receiver is equipped with a locking handle and nickel plated steel slides that engage up to 1,440 signal contact points. It allows a high amount of I/O within a compact and rugged device.

6 Module Solution • G6 ITA with Removable Cover

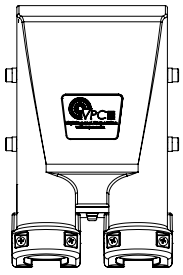

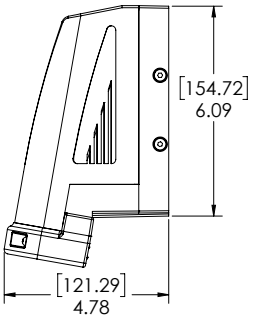

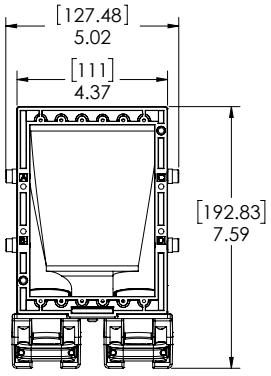

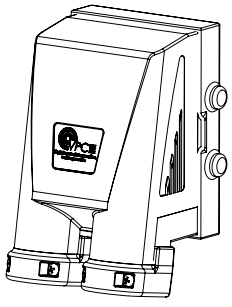

SHOWN WITH INCLUDED PROTECTIVE COVER.

➤ ITA, G6, 6 Module, Removable Cover, Keying Feature, with Protective Cover • **Part # 410 104 273**

ITA Specifications

Weight	1.4 lbs [.63 kg]
Cover Material	EMI-shielded nylon
Frame Material	Chromated aluminum
Available Module Slots	6 positions
Cycle Life	20,000 cycles
Temperature	–55° C to 85° C
Max. Mating Force	630 lbs [285.8 kg]

The U-shaped cable clamp is adjustable to accommodate the amount of wires in your cable bundle.

The G6 ITA is equipped with a removable EMI-shielded backshell. The backshell slides up to provide access to wires and connectors and is secured by one screw. The removable and adjustable U-shaped cable clamp is attached by screws to the ITA frame. A protective cover is included with the ITA.

6 Module Solution • G6 ITA

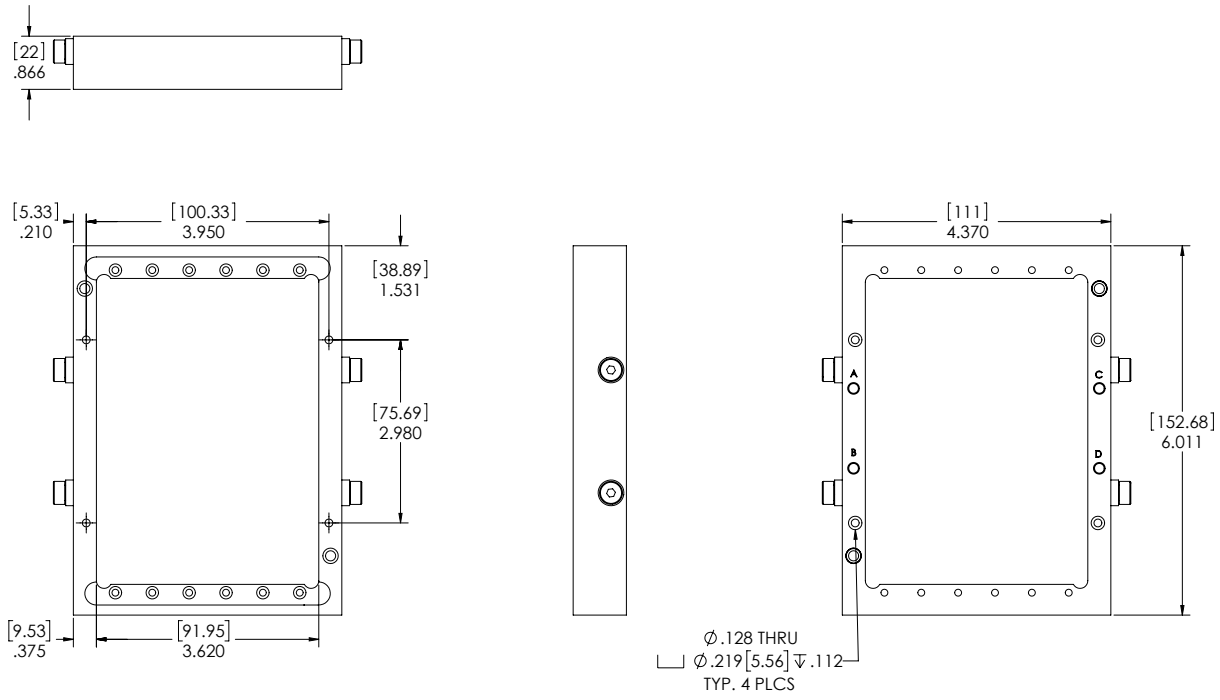

➤ ITA, G6, 6 Module • **Part # 410 104 331**

ITA Specifications

Weight	.75 lbs [.34 kg]
Frame Material	Chromated aluminum
Available Module Slots	6 positions
Cycle Life	20,000 cycles
Temperature	–55° C to 85° C
Max. Mating Force	630 lbs [285.8 kg]

The six module ITA allows you to use an existing enclosure or create your own enclosure for your specific application. For EMI protection see Part # 410 104 288.

6 Module Solution • G6 Accessories

The receiver protective cover protects contacts and modules when the receiver is not in use.

- Protective Cover, G6, Receiver
  Part # 310 113 158

The vinyl ITA protective cover protects contacts and modules when the ITA is not in use.

- Replacement Protective Cover, G6, ITA
  Part # 410 112 684

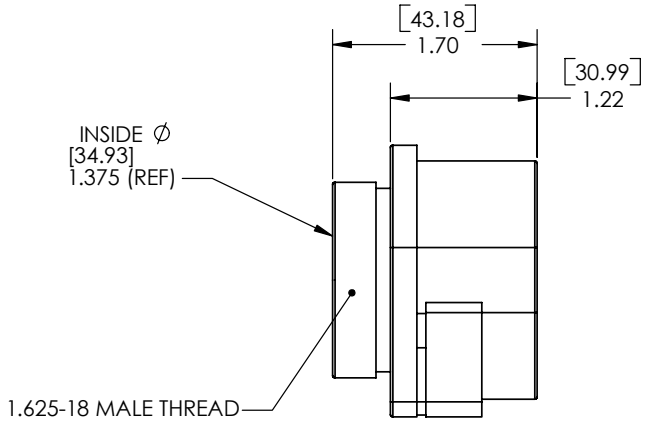

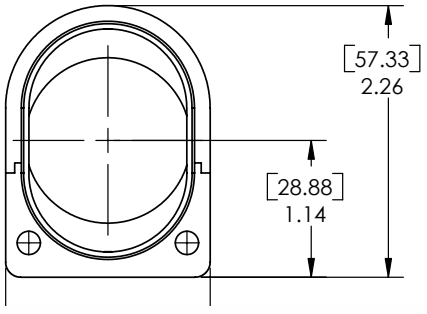

The threaded coupling adapter is designed to accommodate military and commercial circular backshells for conduit or strain relief when designing for general and heavy-duty applications. The male thread size is 1.625"-18" for this application.

- Threaded Coupling Adapter, G2, G6, G10, ITA, for Conduit Harnessing Assemblies/Clamps
  Part # 410 112 599

10 Module Solution • G10

The 10 module solution provides great reliability while simultaneously engaging up to 2,400 signal contacts. The adaptable G10 integrates a wide variety of I/O options in various module configurations. The contacts are incorporated into cable assemblies for specific instruments. The Vertical Hinged Mounting Frame and slide mount option are suitable for rack or chassis mount applications and offer quick access to resources and cables. The ITA has a unique, removable, EMI-shielded backshell which allows easy access to the modules and contacts.

Features and Benefits

- Precision engagement mechanism engineered to mate up to 2,400 contacts
- Cable mount ITA includes EMI-shielded backshell that slides off to allow easy access to wiring
- Cable mount ITA accepts standard circular cable adapters
- Standard ITA frames accommodate multiple enclosure types for a variety of fixture options
- Modular and reconfigurable for evolving tests requirements
- Reliable connectivity beyond 20,000 cycles
- Quick and easy integration and maintenance
- Wide range of I/O options including signal, coaxial, power, pneumatic, vacuum, thermocouple, fiber optic, and PCB solutions

G10 Receiver and ITA

G10 Mounted to Vertical Hinged Mounting Frame

G10 Panel Mount Configuration

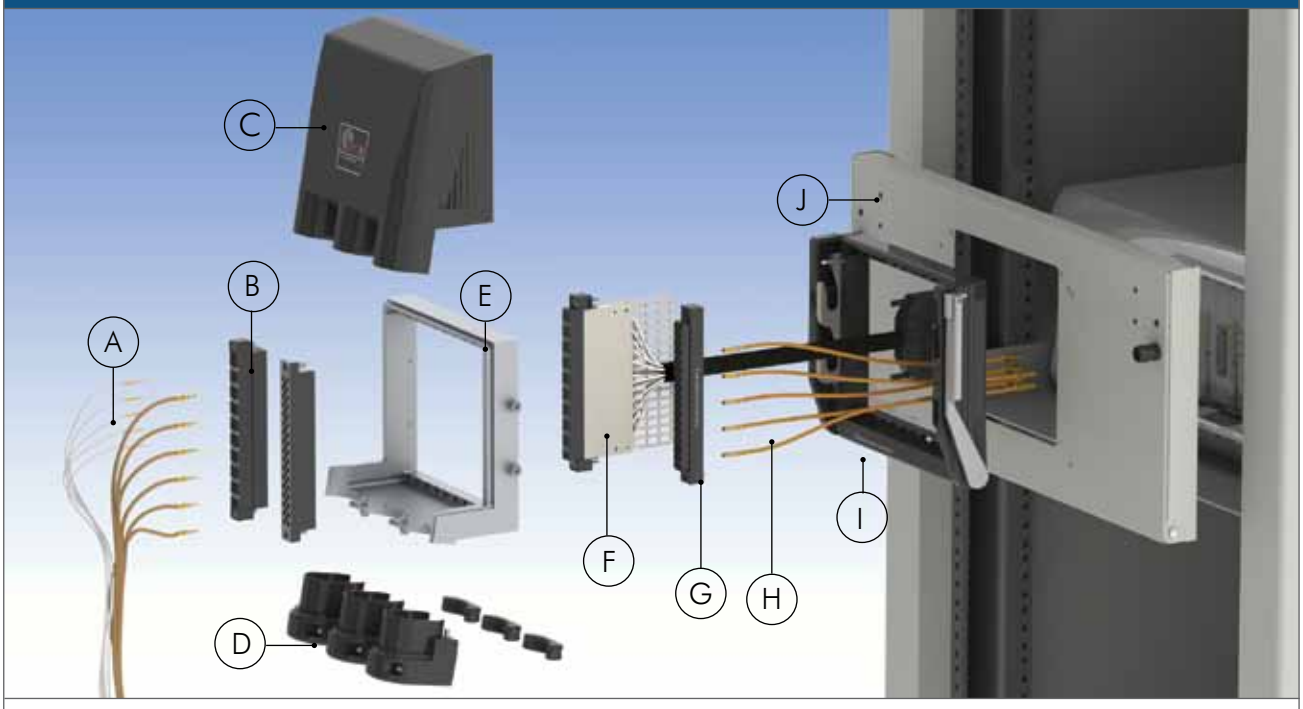

A. ITA Patchcords
B. ITA Module
C. ITA Removable Cover
D. U-shaped Cable Clamp
E. G10 ITA
F. Cable Assembly*
G. Receiver Module
H. Receiver Patchcords
I. G10 Receiver
J. Vertical Hinged Mounting Frame

Part #	Description	*Visit VPC.com for full product details*
RECEIVERS		
310 104 317	Receiver, G10, 10 Module (I)	
310 104 360	Receiver, G10, 10 Module with 4.34" [110.24 mm] Extended Handle	
310 104 366	Receiver, G10, 10 Module, EMI Gasket	
ITAS		
410 104 272	ITA with Removable Cover, G10, 10 Module, with Protective Cover (E)(D)(C)	
410 104 375	ITA, G10, 10 Module	
410 104 123	ITA, 9010, 10 Module	
ENCLOSURES		
410 112 291	Enclosure, 10 Module, Hinged Cover Plate	
410 112 198	Enclosure, 25 Module, Hinged Cover Plate, 4" Deep	
410 112 252	Enclosure, 10 Module, 3 Cable Clamps	
410 112 424	Adapter Plate, allows 10 Module ITA to accept 25 Module Enclosures	
410 114 138	Enclosure, 10 Module, 4" Deep, 3 Cable Clamps	
If you do not see an enclosure that meets your needs, please visit vpc.com/products/enclosures for more options.		
MOUNTING OPTIONS		
310 113 342	Vertical Hinged Mounting Frame, G10, 5U (J)	
310 113 408	Vertical Hinged Mounting Frame, G10, 5U, Cutout on Right	
310 113 358	Vertical Hinged Mounting Frame, 5U, Blank	
For other mounting options, please visit vpc.com/products/mounting_options		
ACCESSORIES		
310 113 154	Protective Cover, G10, Receiver	
410 112 685	Replacement Protective Cover, G10, ITA	
310 113 417	Chassis Mount Kit for National Instruments Chassis (PXI-1044/1045/1065 and PXIe-1065/1075)	
310 113 371	Chassis Mount Kit for Pickering 40-908, 40-914, 40-918	
310 113 589	Chassis Mount Kit for Keysight M9018A Chassis	
410 112 599	Threaded Coupling Adapter, G2, G6, G10, ITA, for Conduit Harnessing Assemblies/Clamps	
410 114 133	Enclosure Accessory Kit, Gas Spring for Sloped Enclosure	

** For Cable Assemblies, Mating Modules, Patchcords - Visit VPC's Configurators at vpc.com/wire*

G10 Slide Mount Configuration

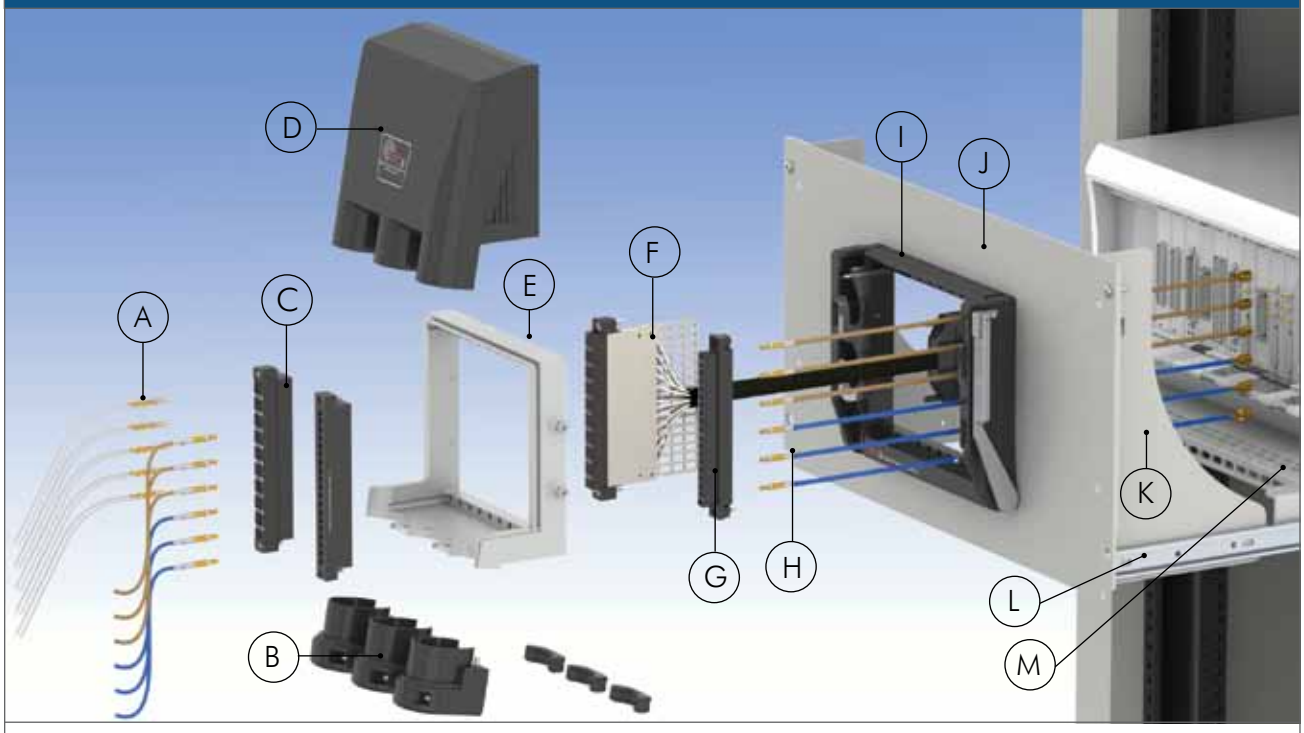

A. ITA Patchcords
B. U-shaped Cable Clamp
C. ITA Module
D. ITA Removable Cover
E. G10 ITA
F. Receiver Cable Assembly*
G. Receiver Module
H. Receiver Patchcords
I. G10 Receiver
J. Mounting Panel
K. Mounting Flange
L. Slide Kit
M. Instrument Bracket

Part #	Description	*Visit VPC.com for full product details*

RECEIVER

310 120 146	Receiver, G10, 10 Module, with Slide Mounting Kit (slide kit required) (I)(J)(K)(M)

ITAS

410 104 272	ITA with Removable Cover, G10, 10 Module, with Protective Cover (E)(D)(B)
410 104 375	ITA, G10, 10 Module

ENCLOSURES

410 112 252	Enclosure, 10 Module, 3 Cable Clamps
410 112 291	Enclosure, 10 Module, Hinged Cover Plate
410 112 198	Enclosure, 25 Module, Hinged Cover Plate, 4" Deep
410 112 424	Adapter Plate, allows 10 Module ITA to accept 25 Module Enclosures
410 114 138	Enclosure, 10 Module, 4" Deep, 3 Cable Clamps

If you do not see an enclosure that meets your needs, please visit vpc.com/products/enclosures for more options.

SLIDE KITS (L)

310 113 451	28" Slide Kit, Fits 26"–30" Deep Racks, Supports 180 lbs.
310 113 411	30" Slide Kit, Fits 28"–32" Deep Racks, Supports 180 lbs.
310 113 500	36" Slide Kit, Fits 34"–38" Deep Racks, Supports 180 lbs.

ACCESSORIES

310 113 154	Protective Cover, G10, Receiver
410 112 685	Replacement Protective Cover, G10, ITA

** For Cable Assemblies, Mating Modules, Patchcords - Visit VPC's Configurators at vpc.com/wire*

10 Module Solution • G10 Receiver

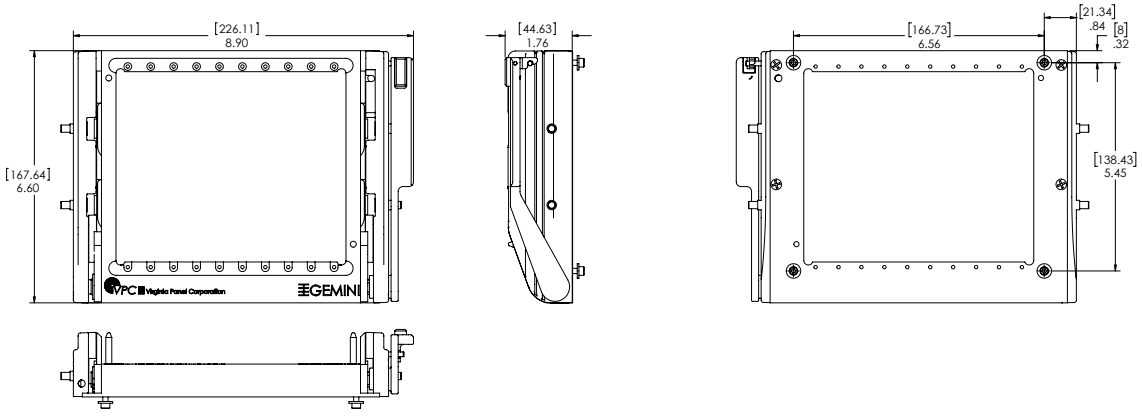

➤ Receiver, G10, 10 Module • **Part # 310 104 317**

Receiver Specifications

Weight	2.20 lbs [1.0 kg]
Side Material	ABS-polycarbonate blend
Frame Material	Anodized aluminum
Slide Material	Nickel plated steel
Linkage, Handle, Latch Material	Stainless steel
Available Module Slots	10 positions
Cycle Life	20,000 cycles
Temperature	–55° C to 85° C
Max. Weight Support	25 lbs @ 6" [11 kg @ 15.25 cm]
Max. Mating Force	630 lbs [285.8 kg]

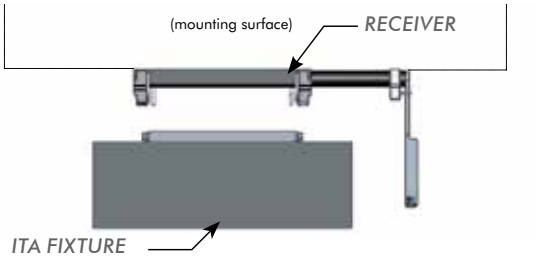

This receiver is also available with a 4.34" [110.24 mm] extended handle, Part # 310 104 360, to accommodate wide fixtures.

The G10 receiver is equipped with a locking handle and nickel plated steel slides that engage up to 2,400 contact points. It allows a high number of I/O within a compact and rugged device.

10 Module Solution • G10 Receiver with Slide Mounting Kit

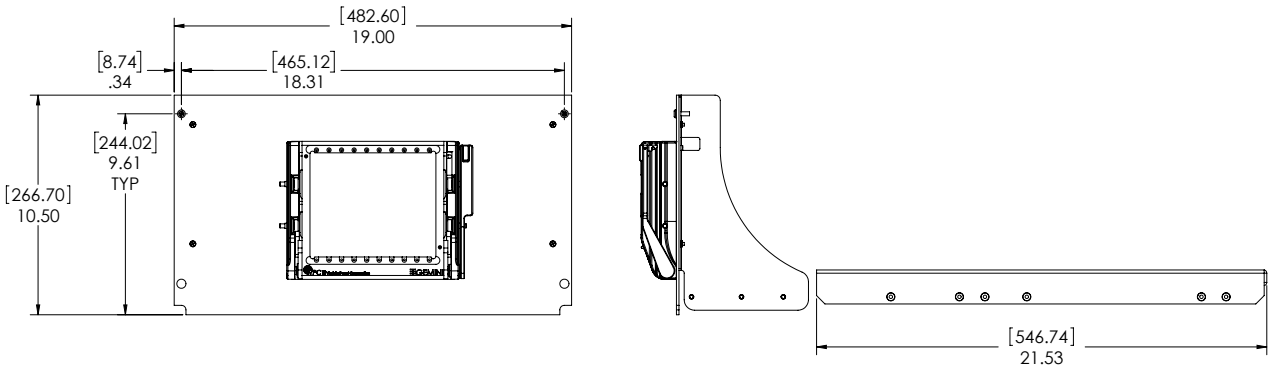

➤ Receiver, G10, 10 Module, with Slide Mounting Kit (slide kit required) • **Part # 310 120 146**

Receiver Specifications

Weight	11.5 lbs [5.22 kg]
Side Material	ABS-polycarbonate blend
Frame Material	Anodized aluminum
Slide Material	Nickel plated steel
Linkage, Handle, Latch Material	Stainless steel
Mounting Plate, Mounting Flange, Instrument Bracket Material	Aluminum
Available Module Slots	10 positions
Cycle Life	20,000 cycles
Temperature	–55° C to 85° C
Max. Weight Support	25 lbs @ 6" [11 kg @ 15.25 cm]
Max. Mating Force	630 lbs [285.8 kg]

The G10 receiver is equipped with a locking handle and nickel plated steel slides that engage up to 2,400 contact points. It allows a high number of I/O within a compact and rugged device. This receiver is designed to work with a slide kit and includes a mounting bracket, flanges, and instrument bracket. A slide kit is required for use.

10 Module Solution • G10 ITA with Removable Cover

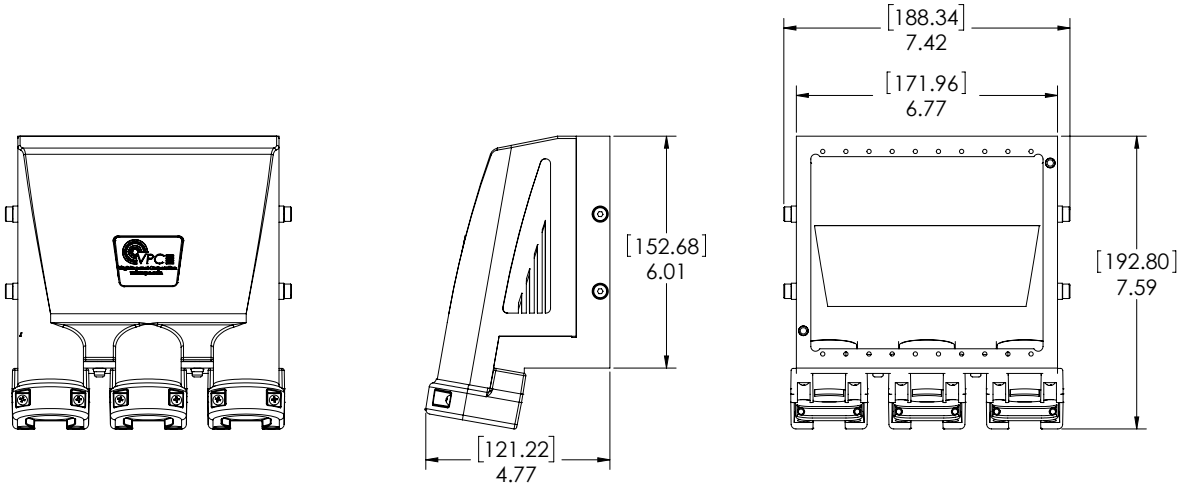

➤ ITA with Removable Cover, G10, 10 Module, with Protective Cover • **Part # 410 104 272**

ITA Specifications

Weight	2.1 lbs [.95 kg]
Cover Material	EMI-shielded nylon
Frame Material	Chromated aluminum
Available Module Slots	10 positions
Cycle Life	20,000 cycles
Temperature	–55° C to 85° C
Max. Mating Force	630 lbs [285.8 kg]

The U-shaped cable clamp is adjustable to accommodate the amount of wires in your cable bundle.

The G10 ITA is equipped with a removable EMI-shielded backshell. The backshell slides up to provide access to wires and connectors and is secured by two screws. The removable and adjustable U-shaped cable clamp is attached by screws to the EMI-shielded backshell. A protective cover is included with the ITA.

10 Module Solution • G10 ITA

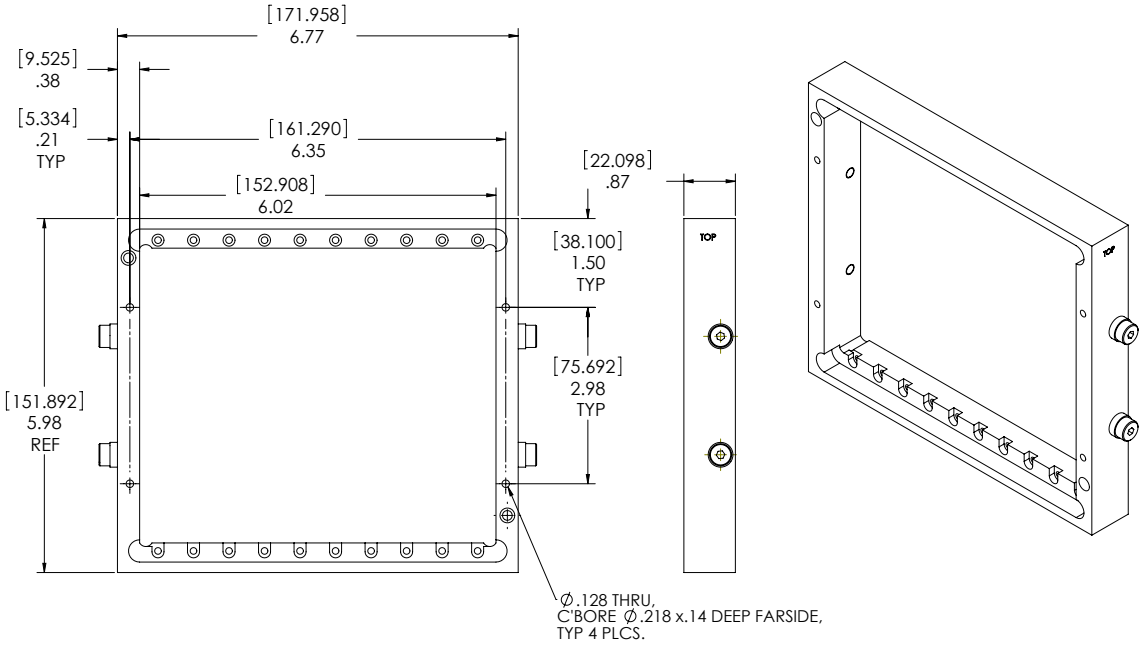

➤ ITA, G10, 10 Module • **Part # 410 104 375**

ITA Specifications

Weight	.55 lbs [.24 kg]
Frame Material	Chromated aluminum
Available Module Slots	10 positions
Cycle Life	20,000 cycles
Temperature	–55° C to 85° C
Max. Mating Force	630 lbs [285.8 kg]

This 10 module ITA uses VPC enclosures or gives you the option to create your own enclosure or fixture needed for your application.

10 Module Solution • G10 Accessories

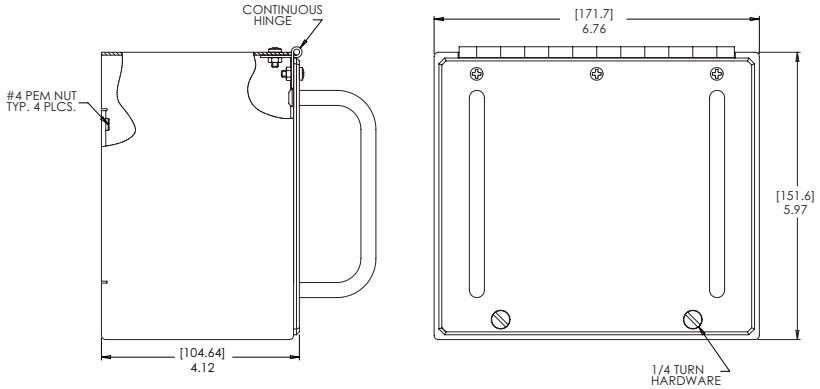

This aluminum enclosure for a 10 module ITA Part # 410 104 375. The enclosure has handles and includes a hinged cover secured with two ¼ turn fasteners.

➤ Enclosure, 10 Module, with Hinged Cover Plate • **Part # 410 112 291**

The receiver protective cover protects contacts and modules when the receiver is not in use.

➤ Protective Cover, G10, Receiver
Part # 310 113 154

The vinyl ITA protective cover protects contacts and modules when the ITA is not in use.

➤ Replacement Protective Cover, G10, ITA
Part # 410 112 685

Go Horizontal
with S6, G12 and G12x.

Low Profile 1U Height

- The S6's low profile allows over 1,400 points while only occupying 1U of rack space
- Horizontal layout maximizes the module positions and minimizes the required rack space

Tabletop Configuration

- The tabletop configurations allow the S6, G12 and G12x to be mounted to any horizontal surface
- Four removable rubber feet to enable permanent tabletop mounting configurations
- Rear covers are available to protect wiring from the receiver to the test equipment

Positive-Lock Latching Mechanisms - S6

- Locking latches enable secure engagement
- Guide pins guarantee consistent lead-in with every connection
- Each lever provides two points of contact for even engagement distribution

Slide Configuration

- The slide kits for the S6, G12 and G12x allow access to test instrumentation and wiring
- Multiple accessories are available for this configuration such as the cable tray, the keyboard tray kit, and adjustable leg kit
- Slide mounts can support fixture weights up to 180 lbs [81.65 kg] and up to 350 lbs [158.76 kg] with leg kit

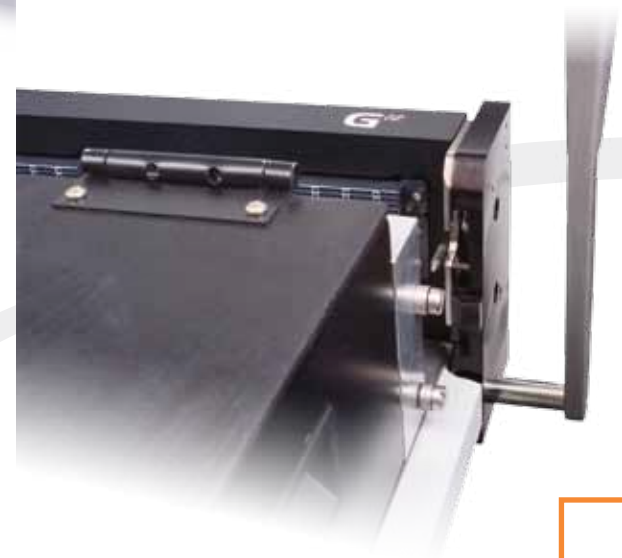

Easy Glide Docking

- Provides an easy way of guiding a fixture into position prior to engagement
- Runners along the platform provide smooth-sliding action
- Ideal feature when using large scale fixtures
- Alignment pins provide accurate engagement

6 Module Solution • S6

The S6 provides robust, reliable and repeatable testing capabilities for small and intermediate size test applications. With easy glide docking created by the smooth motion of the engagement handles, it is fixture ready with over 1,400 contact points within a 1U height. The S6 has many configuration possibilities with a wide range of I/O options. Its low profile solution is also designed to accept a variety of PCB solutions.

S6 Receiver and ITA

Features and Benefits

- Precision engagement mechanism engineered to mate over 1,400 signal points in a 1U height
- Standard ITA frames accommodate multiple enclosure types for a variety of fixture options
- Modular and reconfigurable for evolving test requirements
- Reliable connectivity beyond 20,000 cycles
- Quick and easy integration and maintenance
- Wide range of I/O options including signal, coaxial, power, pneumatic, vacuum, thermocouple, fiber optic, and PCB solutions
- Versatile platform for fixture support
- Slide mounted S6 and associated accessories offer easy access to cables and test instrumentation

Rack Mounted S6

S6 Slide Configuration

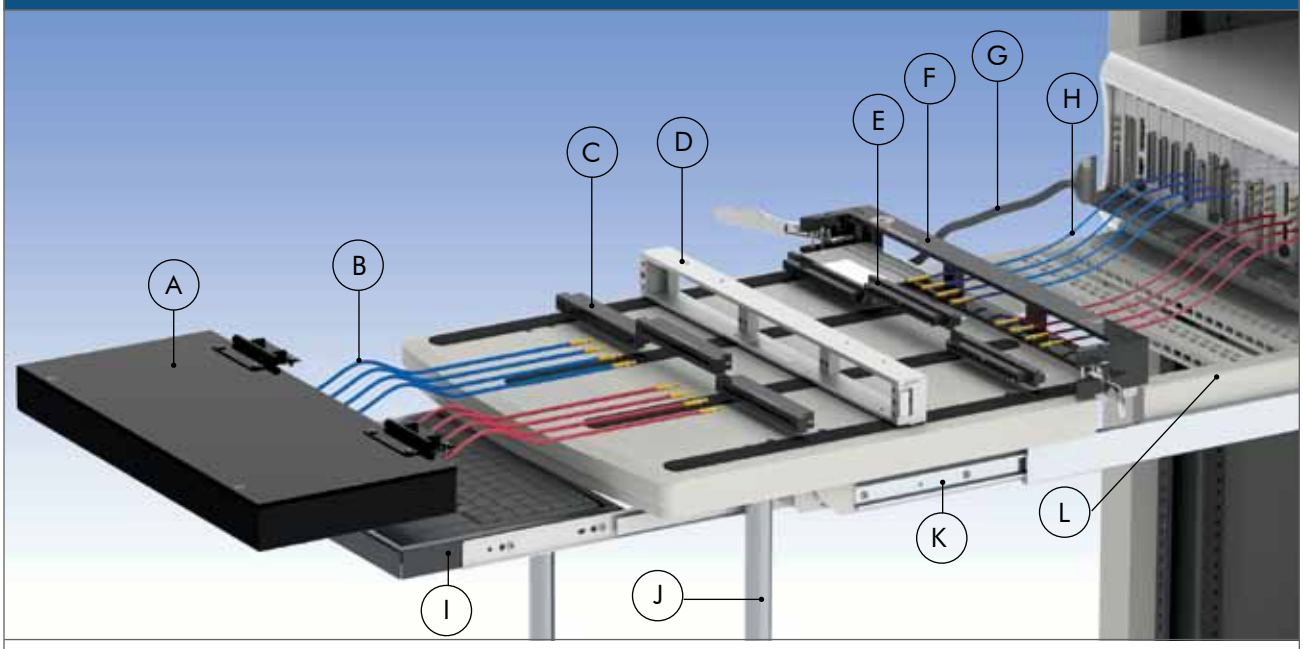

A. ITA Enclosure
B. ITA Patchcords
C. ITA Module
D. S6 ITA
E. Receiver Module
F. S6 Receiver with 20" Platform
G. Receiver Cable Assembly*
H. Receiver Patchcords
I. Keyboard Tray Kit
J. Adjustable Leg Kit
K. Slide Kit
L. Instrument Bracket Kit

Part #	Description	*Visit VPC.com for full product details*
RECEIVERS		
310 122 100	Receiver, S6, 6 Module	
310 122 101	Receiver, S6, 6 Module with 15" Platform, for Slide Mount (slide kit required)	
310 122 108	Receiver, S6, 6 Module with 20" Platform, for Slide Mount (slide kit required) (F)	
310 122 110	Receiver, S6, 6 Module with 15" Platform for Tabletop	
310 122 111	Receiver, S6, 6 Module with 20" Platform for Tabletop	
ITA		
410 122 100	ITA, S6, 6 Module, with Protective Cover (D)	
ENCLOSURES (A)		
410 112 701	Enclosure, S6, 1.75" x 18" x 8"	
410 112 703	Enclosure, S6, 4" x 18" x 12"	
410 112 702	Enclosure, S6, 1.75" x 18" x 8" for Discrete Wiring	
410 112 712	Enclosure, S6, 4" x 18" x 12" for Discrete Wiring	
If you do not see an enclosure that meets your needs, please visit vpc.com/products/enclosures for more options.		
SLIDE KITS (K)		
310 113 409	20" Slide Kit, Fits 18"–22" Deep Racks, Supports 180 lbs.	
310 113 410	24" Slide Kit, Fits 22"–26" Deep Racks, Supports 180 lbs.	
310 113 451	28" Slide Kit, Fits 26"–30" Deep Racks, Supports 180 lbs.	
310 113 411	30" Slide Kit, Fits 28"–32" Deep Racks, Supports 180 lbs.	
310 113 500	36" Slide Kit, Fits 34"–38" Deep Racks, Supports 180 lbs.	
ACCESSORIES		
310 113 432	Protective Cover, S6, Receiver	
410 112 700	Replacement Protective Cover, S6, ITA	
310 113 430	Rack Extender Kit, S6, 4" Deep	
310 113 424	Cable Tray, Slide Configuration, for Strain Relief and Cable Management, for 28" and longer slides only	
310 113 439	Keyboard Tray Kit, Slide Configuration, Keyboard with Touchpad Mouse Included (I)	
310 113 453	Instrument Bracket Kit with Strain Relief, Slide Configuration, for 28" and longer slides only (L)	
310 113 566	Adjustable Leg Kit for the 20" Platform, 27"-36", Supports 350 lbs. (J)	

** For Cable Assemblies, Mating Modules, Patchcords – Visit VPC's Configurators at vpc.com/wire*

6 Module Solution • S6 Receiver

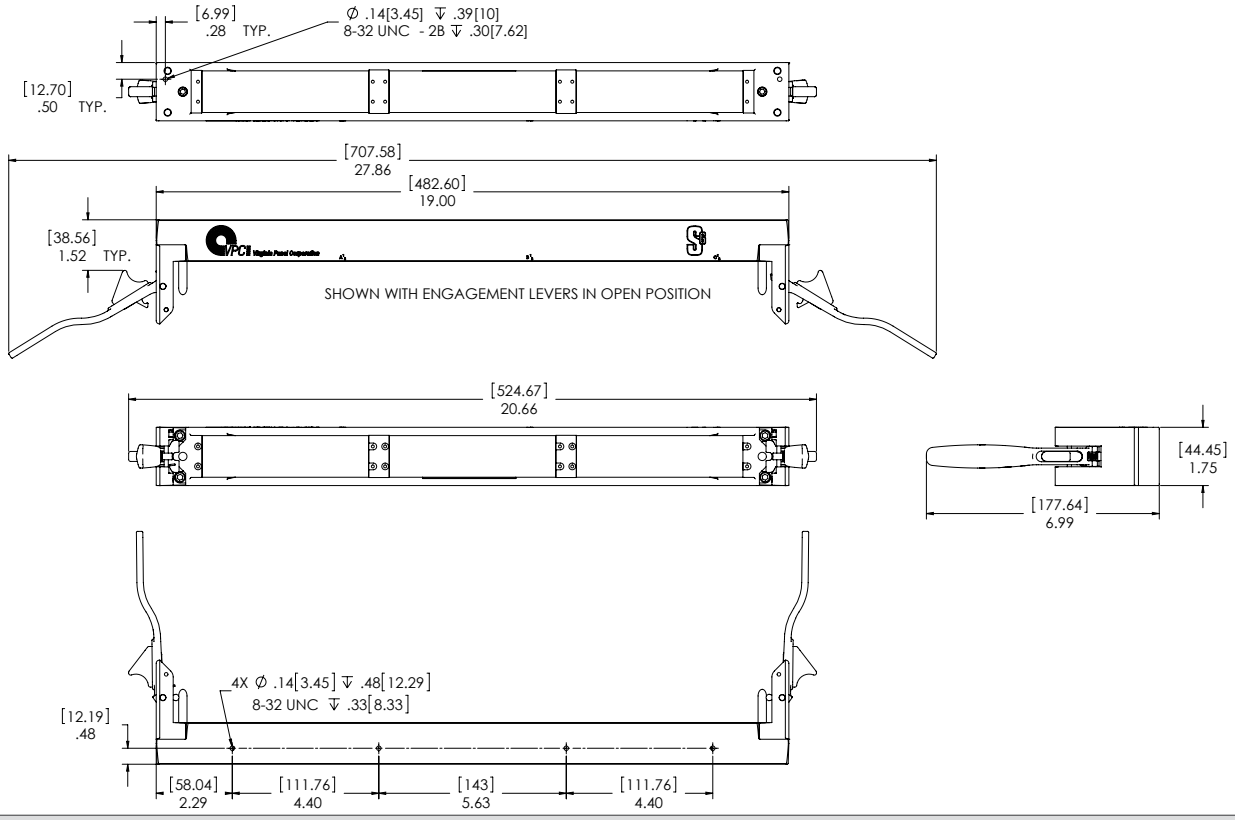

➤ Receiver, S6, 6 Module • **Part # 310 122 100**

Receiver Specifications

Weight	3.80 lbs [1.72 kg]
Rotation Block Material	Powder coated aluminum
Frame Material	Powder coated zinc alloy
Alignment Pin Material	Stainless steel
Handle Material	Nickel plated alloy steel
Available Module Slots	6 positions
Cycle Life	20,000 cycles
Temperature	–55° C to 85° C
Max. Weight Support	50 lbs @ 6" [22 kg @ 15.24 cm]

The S6 receiver is designed to mount to a rack or directly to a tabletop. The 1U high unit features positive-latching mechanisms and integrated guide pins to create a highly reliable engagement system. The S6 receiver is versatile and has module positions screened on the top for ease of module placement.

6 Module Solution • S6 Receiver for Slide Mount

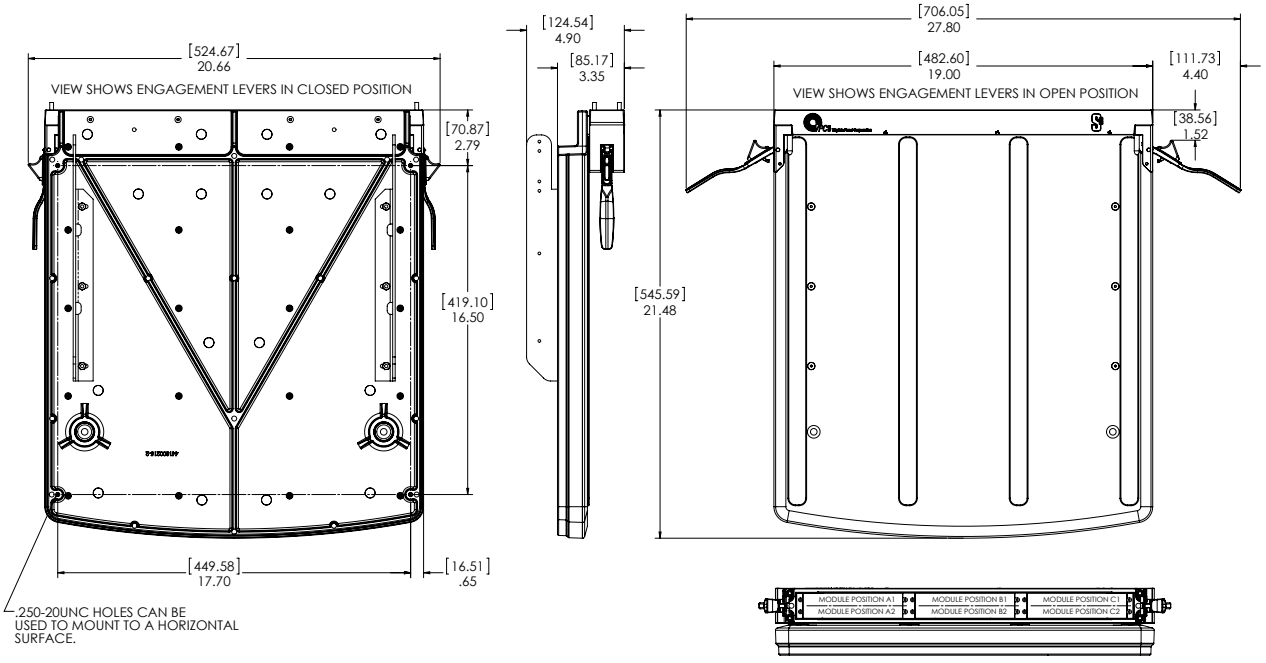

➤ Receiver, S6, 6 Module with 20" Platform, for Slide Mount (slide kit required) • **Part # 310 122 108**

Receiver Specifications

Weight	20.86 lbs [9.46 kg]
Rotation Block Material	Powder coated aluminum
Frame Material	Powder coated zinc alloy
Alignment Pin Material	Stainless steel
Handle Material	Nickel plated alloy steel
Available Module Slots	6 positions
Cycle Life	20,000 cycles
Temperature	–55° C to 85° C
Max. Mating Force	280 lbs [127.0 kg]

This S6 receiver is designed to mount to slides in a rack application. The 1U height unit features positive-latching mechanisms and integrated guide pins to create a highly reliable engagement system. The S6 receiver is very versatile and has module positions screened on top for ease of module placement. This S6 is also available in a 15" platform, Part # 310 122 101.

6 Module Solution • S6 ITA

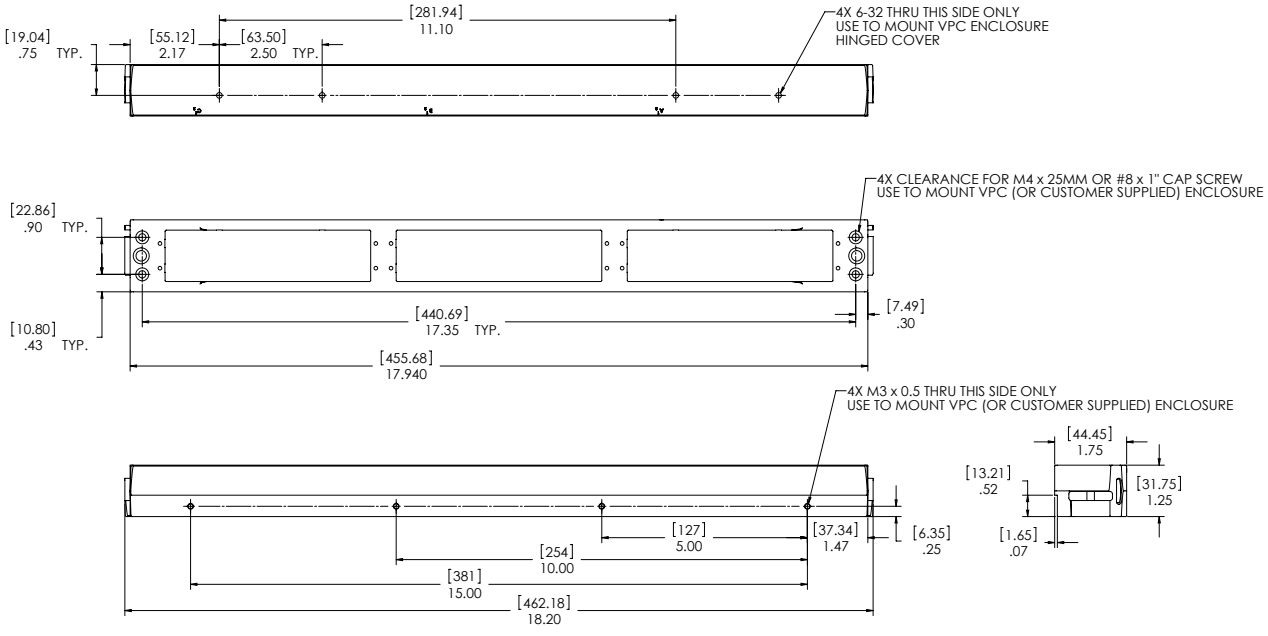

➤ ITA, S6, 6 Module, with Protective Cover • **Part # 410 122 100**

ITA Specifications

Weight	2.6 lbs [1.18 kg]
Frame Material	Powder coated zinc alloy
Available Module Slots	6 positions
Cycle Life	20,000 cycles
Temperature	–55° C to 85° C
Max. Mating Force	280 lbs [127.0 kg]

The S6 ITA has a powder coated finish adding an extra layer protection against the elements. Additionally, this ITA has module positions screened on top for ease of module placement. A protective cover is included with the ITA.

S6 • Accessories

The 1U enclosure takes up little rack space and completes the S6"s low profile solution.

➤ Enclosure, S6, 1.75" x 18" x 8"
Part # 410 112 701

The larger enclosure provides more space for wiring and other test system needs.

➤ Enclosure, S6, 4" x 18" x 12"
Part # 410 112 703

This enclosure gives you the ability to discrete wire to your UUT with secure strain relief provided by the cable clamps located on the back end. Once the cable clamps are open, you can remove the stiffener bar and install or remove cables without unplugging patchcords from the assembly.

➤ Enclosure, S6, for Discrete Wiring, 1.75" x 18" x 8"
Part # 410 112 702

The receiver protective cover protects your contacts and modules when the receiver is not in use.

➤ Protective Cover, Receiver, S6
Part # 310 113 432

The vinyl ITA protective cover protects contacts and modules when the ITA is not in use.

➤ Replacement Protective Cover, ITA, S6
Part # 410 112 700

The rack extender kit provide additional clearance for the engagement handles when using a rack that has mounting rails recessed more than 1" [25.4 mm] in a slide or rack mount configuration.

➤ Rack Extender Kit, S6, 4" Deep
Part # 310 113 430

12 Module Solution • G12

Available in rack mount, slide mount, and tabletop configurations, the G12 features an aluminum platform to accommodate in-circuit test and other functional bed-of-nails testing requirements. Integrated guide pins and proven QuadraTrack™ engagement mechanisms provide precise lead-in, while pin and socket modules and contacts ensure reliable connections for over 20,000 mating cycles. With 12 module positions for signal, coaxial, power, vacuum, pneumatic, thermocouple, and fiber optic contacts in multiple configurations, the G12 offers I/O options to meet virtually any connectivity requirement.

Features and Benefits

- Precision engagement mechanism engineered to mate over 2,800 contacts in a 3U height
- Standard ITA frames accommodate multiple enclosure types for a variety of fixture options
- Modular and reconfigurable for evolving test requirements
- Reliable connectivity beyond 20,000 cycles
- Quick and easy integration and maintenance
- Versatile platform for fixture support
- Slide mounted G12 and associated accessories offer easy access to cables and test instrumentation

G12 Receiver

Communications Tester with G12

G12 Slide Configuration

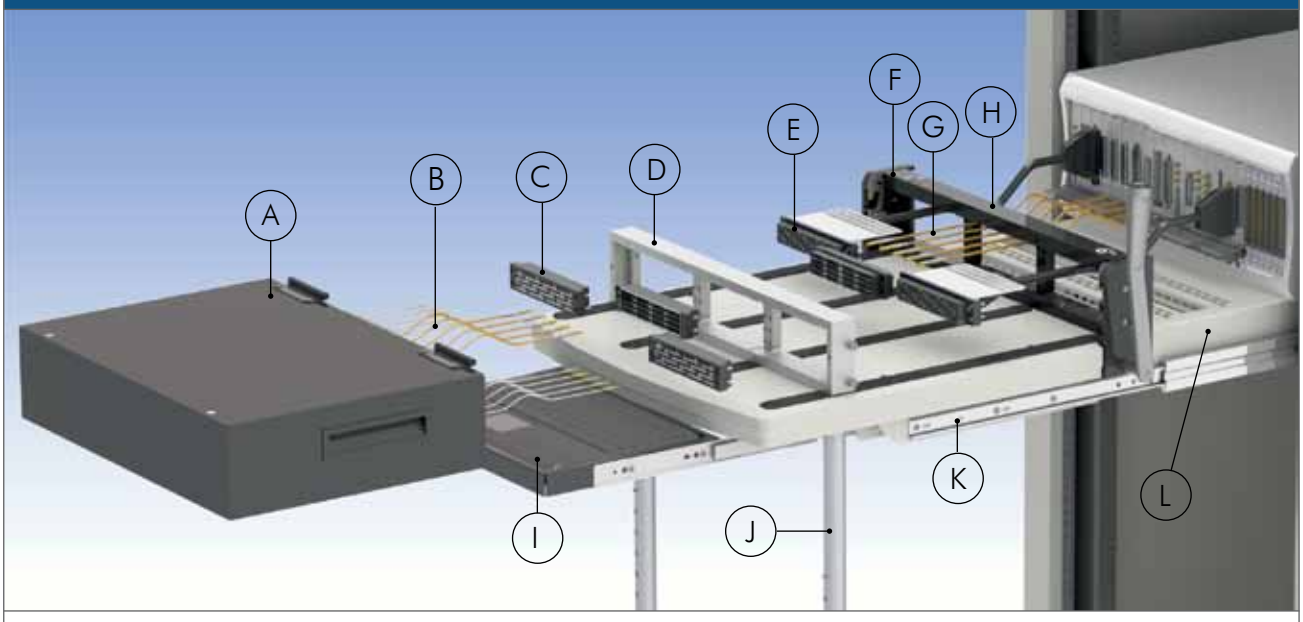

A. ITA Enclosure
B. ITA Patchcords
C. ITA Module
D. G12 ITA
E. Receiver Module
F. Cable Assembly*
G. Receiver Patchcords
H. G12 Receiver with 20" Platform
I. Keyboard Tray Kit
J. Adjustable Leg Kit
K. Slide Kit
L. Instrument Bracket Kit

Part #	Description	*Visit VPC.com for full product details*

RECEIVERS

310 104 325	Receiver, G12, 12 Module with 15" Platform, for Slide Mount (slide kit required)
310 104 334	Receiver, G12, 12 Module with 20" Platform, for Slide Mount (slide kit required) (H)
310 104 408	Receiver, G12, 12 Module with 15" Platform for Tabletop
310 104 409	Receiver, G12, 12 Module with 20" Platform for Tabletop

ITA

410 104 322	ITA, G12, Front Mount, 12 Module, with Protective Cover (D)

ENCLOSURES (A)

410 112 665	Enclosure, G12, Front Mount, 4"x18"x12"
410 112 739	Enclosure, G12, Front Mount, 4"x18"x12", for Discrete Wiring
410 112 757	Enclosure, G12, Front Mount, 7"x18"x12"
410 114 002	Enclosure, G12, Front Mount, Sloped
410 114 101	Enclosure, G12, Front Mount, Sloped, G10 Cover

If you do not see an enclosure that meets your needs, please visit vpc.com/products/enclosures for more options.

SLIDE KITS (K)

310 113 409	20" Slide Kit, Fits 18"–22" Deep Racks, Supports 180 lbs.
310 113 410	24" Slide Kit, Fits 22"–26" Deep Racks, Supports 180 lbs.
310 113 451	28" Slide Kit, Fits 26"–30" Deep Racks, Supports 180 lbs.
310 113 411	30" Slide Kit, Fits 28"–32" Deep Racks, Supports 180 lbs.
310 113 500	36" Slide Kit, Fits 34"–38" Deep Racks, Supports 180 lbs.

ACCESSORIES

310 113 402	Protective Cover, G12, Receiver
410 112 681	Replacement Protective Cover, G12, ITA
410 114 010	Protective Cover, G12, ITA, Aluminum
410 114 133	Enclosure Accessory Kit, Gas Spring Loaded for Sloped Enclosures
310 113 406	Rack Extender Kit, G12, 1.5" Deep
310 113 424	Cable Tray, Slide Configuration, for Strain Relief and Cable Management, for 28" and longer slides only
310 113 433	Gap Cover, G12/G12x, Rack Mount
310 113 439	Keyboard Tray Kit, Slide Configuration, Keyboard with Touchpad Mouse Included (I)
310 113 453	Instrument Bracket Kit with Strain Relief, Slide Configuration, for 28" and longer slides only (L)
310 113 566	Adjustable Leg Kit for the 20" Platform, 27"-36", Supports 350 lbs. (J)
310 118 112	Keying Pin Kit, Receiver/ITA

** For Cable Assemblies, Mating Modules, Patchcords - Visit VPC's Configurators at vpc.com/wire*

12 Module Solution • G12 Receiver for Slide Mount

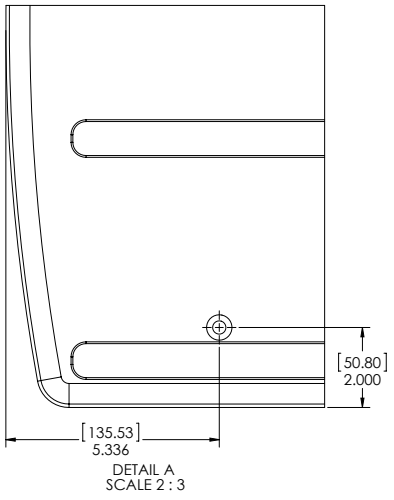

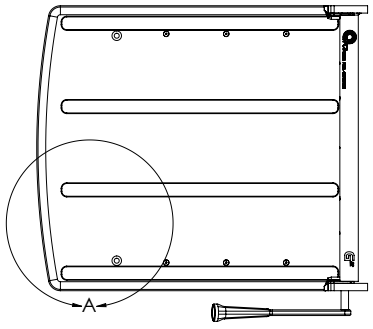

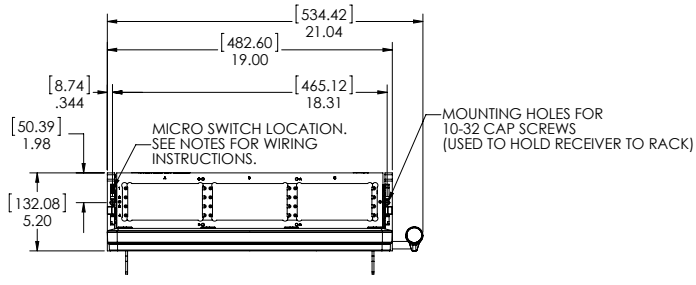

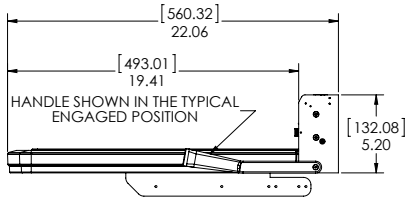

➤ Receiver, G12, 12 Module with 20" Platform, for Slide Mount (slide kit required) • **Part # 310 104 334**

Receiver Specifications

Weight	26.21 lbs [11.88 kg]
Frame Material	Anodized and powder coated aluminum
Slide Material	Nickel plated steel
Linkage, Handle, Latch Material	Stainless steel
Available Module Slots	12 positions
Cycle Life	20,000 cycles
Temperature	–55° C to 85° C
Max. Weight Support	Without Leg Kit: 180 lbs [81.65 kg] With Leg Kit: 350 lbs [158.76 kg]
Max. Mating Force	620 lbs [281.2 kg]

The 20" G12 receiver provides a large platform for use with large fixtures. When used in conjunction with VPC slide mounts and support legs, the receiver can support 350 lbs. The G12 handle can be rotated in 90 degree increments. Also available in a 15" platform, Part # 310 104 325.

12 Module Solution • G12 ITA Front Mount

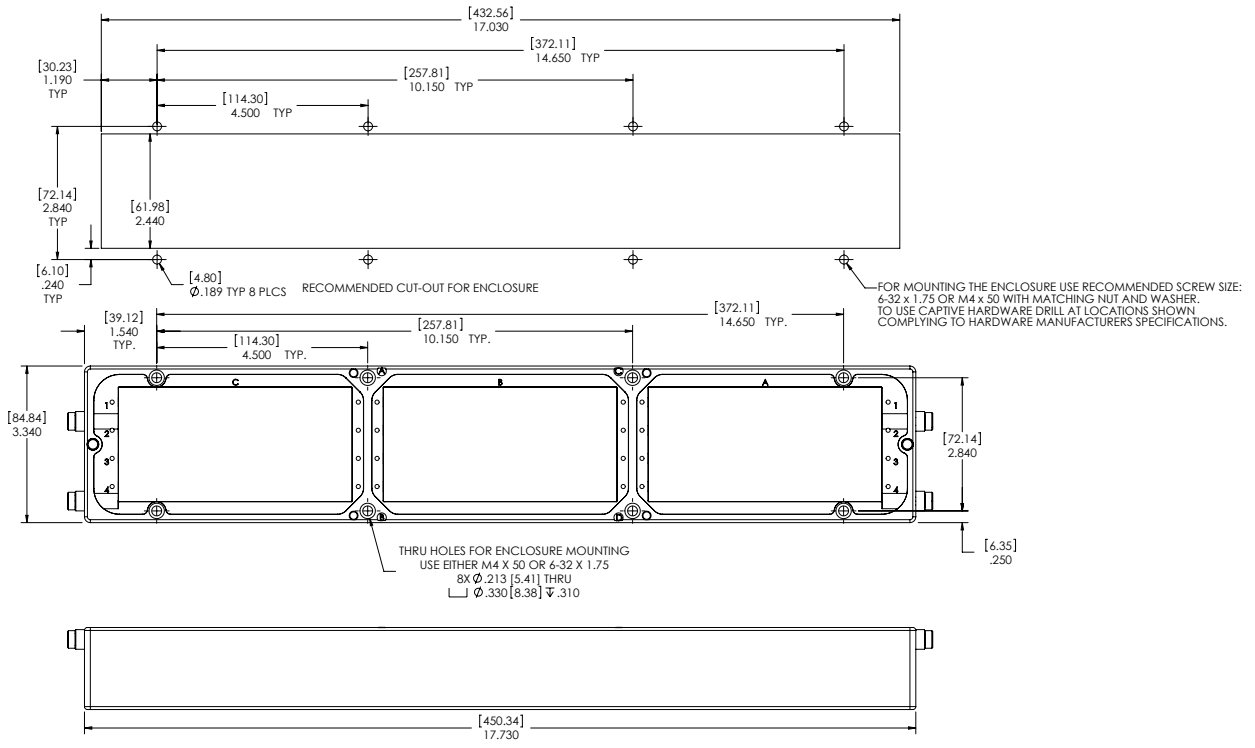

➤ ITA, G12, Front Mount, 12 Module, with Protective Cover • **Part # 410 104 322**

ITA Specifications

Weight	2.35 lbs [1.07 kg]
Frame Material	Chromated aluminum
Available Module Slots	12 positions
Cycle Life	20,000 cycles
Max. Mating Force	620 lbs [281.2 kg]
Temperature	–55° C to 85° C

This 12 module enclosure is made of powder coated aluminum. The top of the enclosure has a hinged cover plate with ¼-turn hardware that provides easy access to the ITA wiring when required.

The G12 ITA can be used with all G12 and G12x receivers. The ITA can be used in a number of applications to accomplish the required connection to the unit under test (UUT). You can mount a VPC enclosure or customize your own fixture to be attached to the ITA. A wide range of ITA modules are available separately for user configuration. A protective cover is included with the ITA.

18 Module Solution • G12x

Available in slide mounted and tabletop configurations, the G12x features an aluminum platform to accommodate in-circuit test and other functional bed-of-nails testing requirements. Integrated guide pins and proven QuadraTrack™ engagement mechanisms provide precise lead-in, while pin and socket modules and contacts ensure reliable connections to over 20,000 mating cycles. With 18 module positions for signal, coaxial, power, vacuum, pneumatic, thermocouple, and fiber optic contacts in multiple configurations, the G12x offers I/O options to meet virtually any connectivity requirement.

Features and Benefits

- Precision engagement mechanism engineered to mate over 4,300 signal points in a 5U height
- Standard ITA frames accommodate multiple enclosure types for a variety of fixture options
- Modular and reconfigurable for evolving test requirements
- Reliable connectivity beyond 20,000 cycles
- Quick and easy integration and maintenance
- Versatile platform for fixture support
- Slide mounted G12x and associated accessories offer easy access to cables and test instrumentation

G12x Receiver

Slide Mounted G12x

G12x Slide Configuration

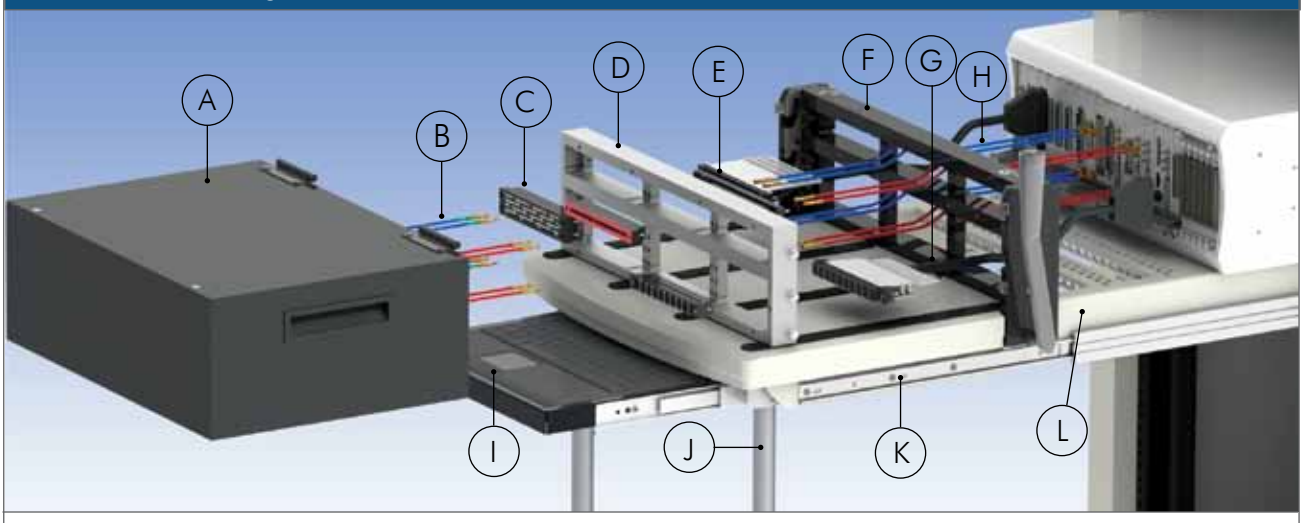

A. ITA Enclosure
B. ITA Patchcords
C. ITA Module
D. G12x ITA
E. Receiver Module
F. G12x Receiver with Platform
G. Receiver Cable Assembly*
H. Receiver Patchcords
I. Keyboard Tray
J. Adjustable Leg Kit
K. Slide Kit
L. Instrument Bracket Kit

Part #	Description	*Visit VPC.com for full product details*
RECEIVERS		
310 104 386	Receiver, G12x, 18 Module with 15" Platform, for Slide Mount (slide kit required)	
310 104 385	Receiver, G12x, 18 Module with 20" Platform, for Slide Mount (slide kit required) (F)	
310 104 410	Receiver, G12x, 18 Module with 15" Platform for Tabletop	
310 104 411	Receiver, G12x, 18 Module with 20" Platform for Tabletop	
ITAS		
410 104 474	ITA, G12x, Front Mount, 18 Module (D)	
410 104 322	ITA, G12, Front Mount, 12 Module, with Protective Cover	
ENCLOSURES (A)		
410 112 849	Enclosure, G12x, Front Mount, 6"x18"x12"	
410 112 856	Enclosure, G12x, Front Mount, 6"x18"x12", for Discrete Wiring	
410 112 665	Enclosure, G12, Front Mount, 4"x18"x12"	
410 112 739	Enclosure, G12, Front Mount, 4"x18"x12", for Discrete Wiring	
410 112 757	Enclosure, G12, Front Mount, 7"x18"x12"	
410 114 003	Enclosure, G12x, Front Mount, Sloped	
410 114 102	Enclosure, G12x, Front Mount, Sloped, with G10 Cover	
If you do not see an enclosure that meets your needs, please visit vpc.com/products/enclosures for more options.		
SLIDE KITS (K)		
310 113 409	20" Slide Kit, Fits 18"–22" Deep Racks, Supports 180 lbs.	
310 113 410	24" Slide Kit, Fits 22"–26" Deep Racks, Supports 180 lbs.	
310 113 451	28" Slide Kit, Fits 26"–30" Deep Racks, Supports 180 lbs.	
310 113 411	30" Slide Kit, Fits 28"–32" Deep Racks, Supports 180 lbs.	
310 113 500	36" Slide Kit, Fits 34"–38" Deep Racks, Supports 180 lbs.	
ACCESSORIES		
310 113 518	Protective Cover, G12x, Receiver	
410 112 857	Protective Cover, G12x, ITA	
410 114 133	Enclosure Accessory Kit, Gas Spring for Sloped Enclosures	
310 113 433	Gap Cover, G12/G12x, Rack Mount	
310 113 519	Rack Extender Kit, G12x, 1.5" Deep	
310 113 424	Cable Tray, Slide Configuration, for Strain Relief and Cable Management, for 28" and longer slides only	
310 113 453	Instrument Bracket Kit with Strain Relief, Slide Configuration, for 28" and longer slides only (L)	
310 113 566	Adjustable Leg Kit for the 20" Platform, 27"-36", Supports 350 lbs. (J)	
310 113 439	Keyboard Tray Kit, Slide Configuration, Keyboard with Touchpad Mouse Included (I)	
310 118 112	Keying Pin Kit, Receiver/ITA	

** For Cable Assemblies, Mating Modules, Patchcords - Visit VPC's Configurators at vpc.com/wire*

18 Module Solution • G12x Receiver

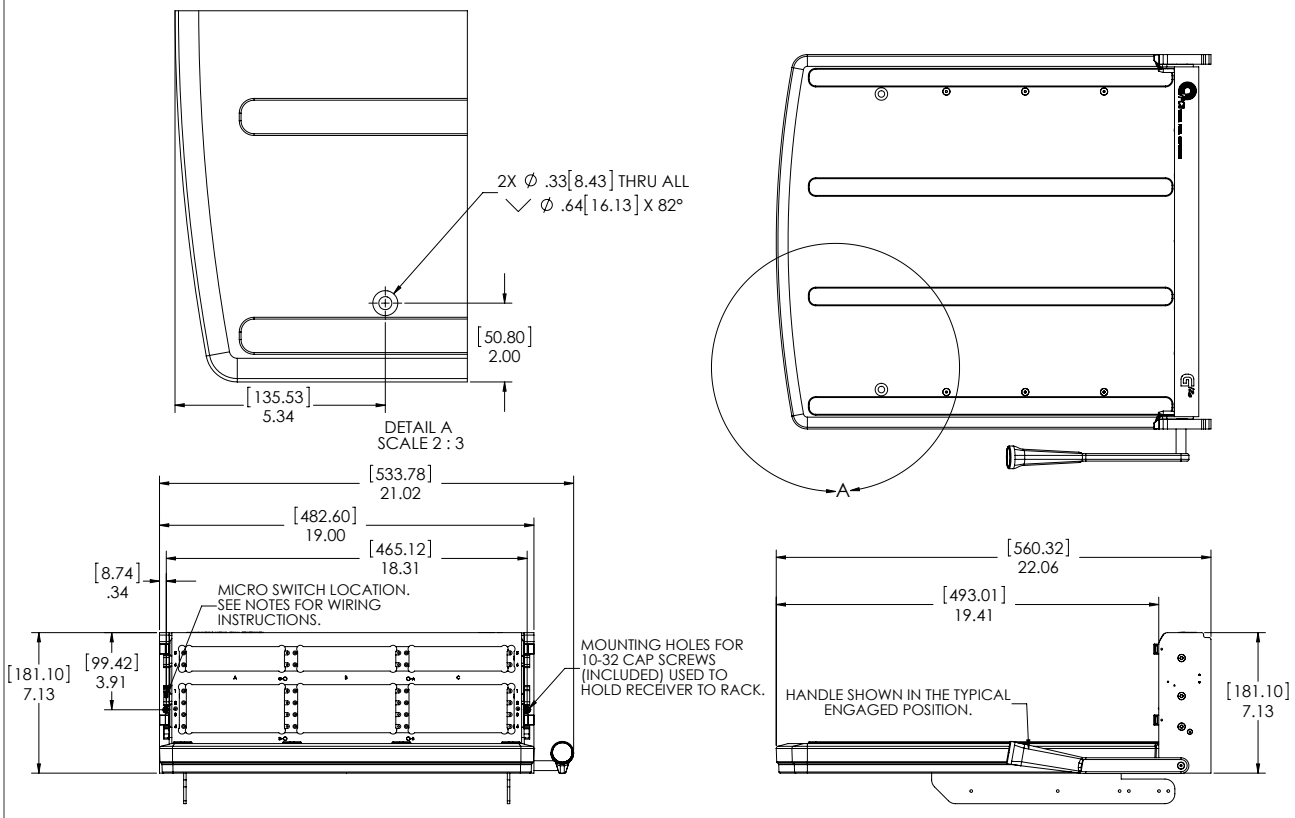

➤ Receiver, G12x, 18 Module with 20" Platform, for Slide Mount (slide kit required) • **Part # 310 104 385**

Receiver Specifications

Weight	27.98 lbs [12.69 kg]
Frame Material	Anodized and powder coated aluminum
Slide Material	Nickel plated steel
Linkage, Handle, Latch Material	Stainless steel
Available Module Slots	18 positions
Cycle Life	20,000 cycles
Temperature	–55° C to 85° C
Max. Weight Support	Without Leg Kit: 180 lbs [81.65 kg] With Leg Kit: 350 lbs [158.76 kg]
Max. Mating Force	890 lbs [403.7 kg]

The G12x receiver 20" platform will support 180 lbs when used in a slide mount configuration. The receiver is equipped with VPC's Quadratrack™ engagement system which provides four points of pull down for a reliable connection every time beyond 20,000 cycles. It can accept both the G12 and G12x ITAs. The G12x handle can be rotated in 90° increments. Also available in a 15" platform, Part # 310 104 386.

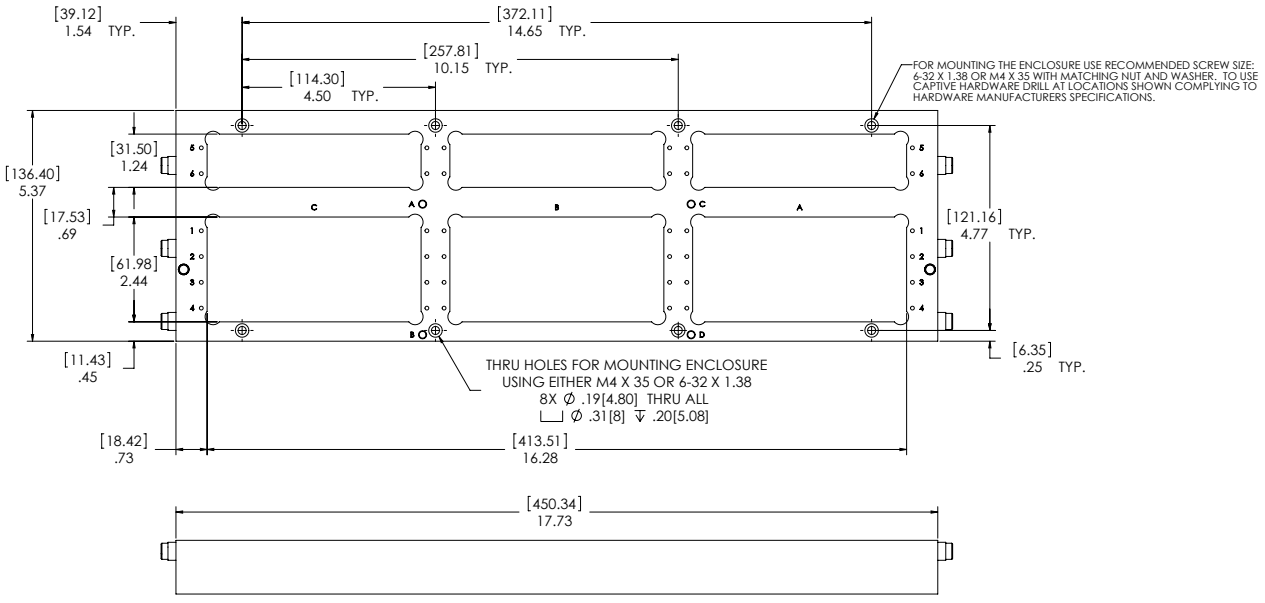

ITA, G12x, Front Mount, 18 Module • **Part # 410 104 474**

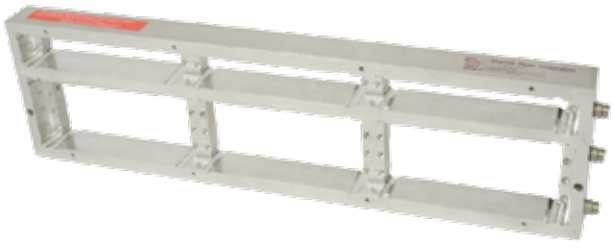

ITA Specifications

Weight	4.48 lbs [2.03 kg]
Frame Material	Chromated aluminum
Available Module Slots	18 positions
Cycle Life	20,000 cycles
Temperature	–55° C to 85° C
Max. Mating Force	890 lbs [403.7 kg]

The G12x ITA can be used with all G12x receivers. The ITA can be used in a number of applications to accomplish the required connection to the unit under test (UUT). You can mount a VPC enclosure or customize your own fixture to be attached to the ITA. These are front mounted for ease of installation. A wide range of ITA modules are available separately for user configuration.

G12/G12x • Accessories

This G12 ITA aluminum enclosure (4" x 18" x 12") features a hinged cover plate with ¼ turn hardware and easy access to the ITA wiring.

- Enclosure, G12, Front Mount
  Part # 410 112 665

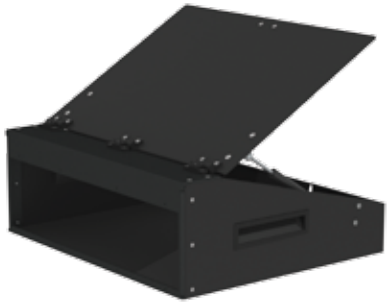

The gap cover is used to cover the open area between the G12 or G12x receiver and rack. The gap cover is not needed when using rack extender kit, G12, Part # 310 113 406, or G12x, Part # 310 113 519.

- Enclosure, G12x, Front Mount, Sloped
  Part # 410 114 003

This aluminum enclosure (6" x 18" x 12") features a hinged cover plate with ¼ turn hardware and provides easy access to the ITA wiring.

- Enclosure, G12x, Front Mount
  Part # 410 112 849

This 12 module enclosure is made of powder coated aluminum. The top of the enclosure has a hinged cover plate with ¼-turn hardware that provides easy access to the ITA wiring when required.

- Enclosure, G12, Front Mount, Sloped
  Part # 410 114 002

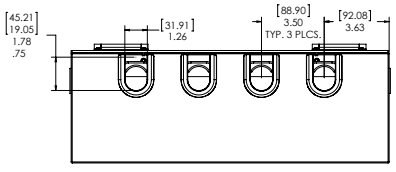

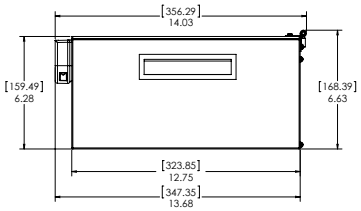

This enclosure gives you the ability to discrete wire to your UUT with secure strain relief provided by the cable clamps located on the back end. Once the cable clamps are open, you can remove the stiffener bar and install or remove cables without unplugging patchcords from the assembly.

- Enclosure, ITA, G12x, 6"x18"x12", for Discrete Wiring • **Part # 410 112 856**

G12/G12x • Accessories

The receiver protective cover protects contacts and modules when the receiver is not in use.

- Protective Cover, Receiver, G12x
  Part # 310 113 518

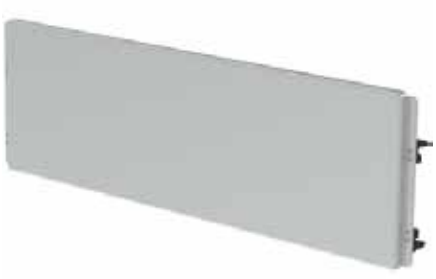

This aluminum ITA protective cover protects contacts and modules when the ITA is not in use.

- Protective Cover, ITA, G12x
  Part # 410 112 857

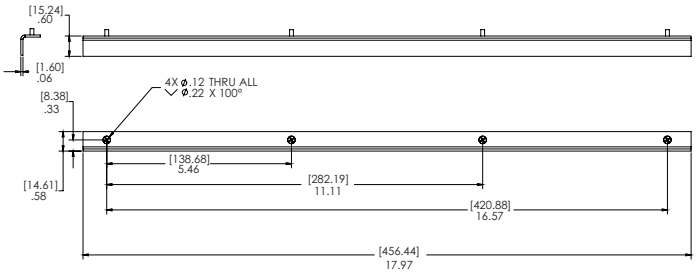

The gap cover is used to cover the open area between the G12 or G12x receiver and rack. The gap cover is not needed when using rack extender kit, G12, Part # 310 113 406, or G12x, Part # 310 113 519.

- Gap Cover, G12/G12x, Slide Configuration • **Part # 310 113 433**

This receiver protective cover protects contacts and modules when the receiver is not in use.

- Protective Cover, Receiver, G12
  Part # 310 113 402

This ITA protective cover protects contacts and modules when the ITA is not in use.

- Replacement Protective Cover, ITA, G12
  Part # 410 112 681

Uncover the Unique features of G18.

Versatile 18 Module Receiver

- Ideal for PXI applications and can allow space up to an 18 slot chassis
- Ability to engage over 4,300 contacts in one motion with the locking handle

G18 Solution

Slide Configuration

- Flush rack mount to save valuable space in front of the test stand
- Slides support up to 180 lbs to accommodate large fixtures
- Easy access to instrumentation with shorter cable lengths
- Multiple slide length options available
- Kit contains G18 receiver, mounting plate, flanges, and instrument bracket

Adaptable Enclosure

- Large enclosure provides ample space for internal wiring
- ITA enclosure easily accepts secondary connectors

Secure Hanger

- Hanger feature on the G18 receiver allows the ITA to remain on the receiver when it is not engaged
- ITA with enclosure will drop in place when handle is lowered to engage the system
- Flush hangers are available for horizontal applications

Standard QuadraTrack™

- Engaging mechanism in the form of a pair of precision machined slides located in the receiver
- Distributes uniform pressure to four points on the ITA during engagement and disengagement
- Precise signal integrity between the receiver and ITA is maintained by QuadraTrack™ engagement system

18 Module Solution • G18

The 18 Module system is the ideal InterConnect solution for an 18 slot PXI chassis. This high-density InterConnect can simultaneously engage over 4,300 signal contacts. The adaptable G18 integrates a wide variety of I/O options in various module configurations. The contacts are incorporated into cable assemblies for specific instruments. The Vertical Hinged Mounting Frame or slide mount configuration are suitable for rack or chassis mount applications and offer quick access to resources and cables.

Features and Benefits

- Precision engagement mechanism engineered to mate over 4,300 contacts
- Standard ITA frame accommodates multiple enclosure types for a variety of fixture options
- Modular and reconfigurable for evolving test requirements
- Reliable connectivity beyond 20,000 cycles
- Quick and easy integration and maintenance
- Wide range of I/O options including signal, coaxial, power, pneumatic, vacuum, thermocouple, fiber optic, and PCB solutions
- Mounting options include Vertical Hinged Mounting Frame and slide mount

G18 Receiver

G18 Mounted to Vertical Hinged Mounting Frame

G18 Slide Mount and Rack Mount Configuration

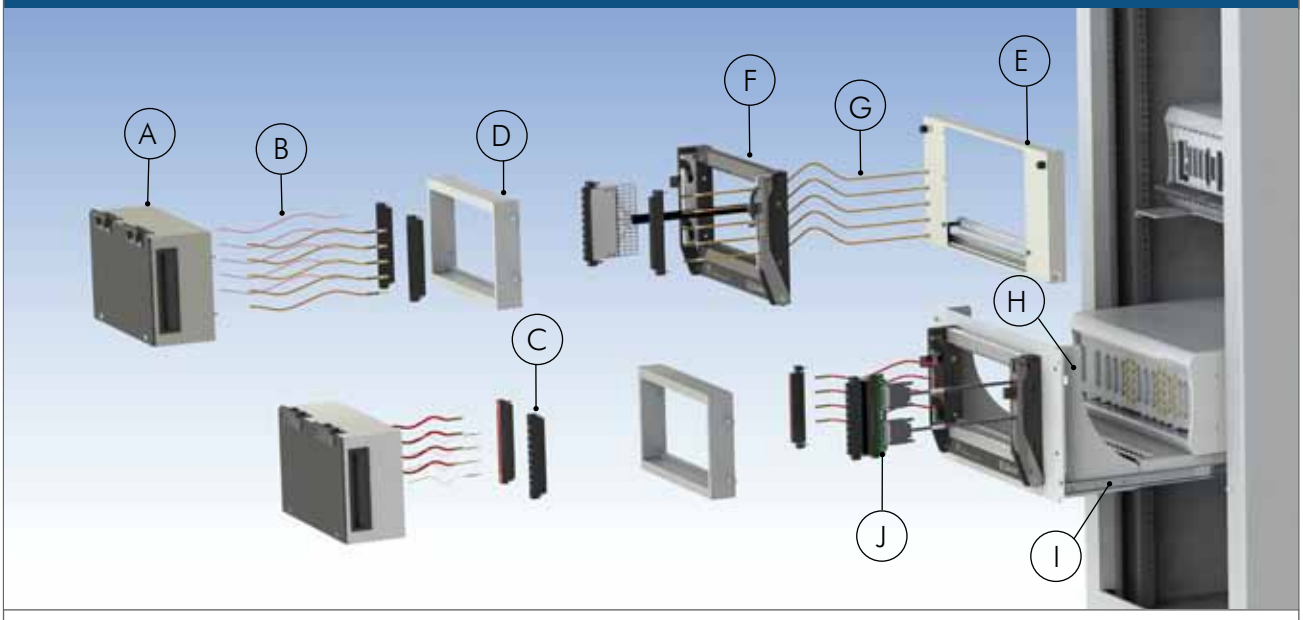

A. ITA Enclosure
B. ITA Patchcords
C. ITA Module
D. G18 ITA
E. Vertical Hinged Mounting Frame
F. G18 Receiver
G. Receiver Patchcords
H. Mounting Flanges
I. Slide Kit
J. PCB Adapter

Part #	Description	*Visit VPC.com for full product details*

RECEIVERS (F)

310 120 101	Receiver, G18, 18 Module for Discrete Wiring
310 120 102	Receiver, G18, 18 Module with Flush Hangers
310 120 141	Receiver, G18, 18 Module with Slide Mounting Kit (slide kit required) (I)
310 120 161	Receiver, G18, 18 Module, EMI Gasket, with Slide Mounting (slide kit required)
310 120 168	Receiver, G18, 18 Module, EMI Gasket

ITAS

410 120 111	ITA, G18, 18 Module (D)
410 120 101	ITA, G18, 18 Module for Discrete Wire and PCB Capability

ENCLOSURES (A)

410 112 527	Enclosure, 18 Module, Hinged Cover Plate, 4" Deep
410 112 664	Enclosure, 18 Module with 3 Cable Clamps

If you do not see an enclosure that meets your needs, please visit vpc.com/products/enclosures for more options.

SLIDE KITS (K)

310 113 451	28" Slide Kit, Fits 26"–30" Deep Racks, Supports 180 lbs.
310 113 411	30" Slide Kit, Fits 28"–32" Deep Racks, Supports 180 lbs.
310 113 500	36" Slide Kit, Fits 34"–38" Deep Racks, Supports 180 lbs.

MOUNTING FRAMES (E)

310 113 322	Vertical Hinged Mounting Frame, G18, 5U
310 113 328	Vertical Hinged Mounting Frame, G18, 9U

ACCESSORIES

310 113 327	Protective Cover, G18, Receiver
410 112 541	Protective Cover, G18, ITA
310 113 542	Instrument Bracket Mounting Block Kit, for use with Pickering PXI Chassis
310 113 371	Chassis Mount Kit for Pickering 40-908, 40-914, 40-918
310 113 417	Chassis Mount Kit for National Instruments PXI-1044 and PXI-1045 Chassis
310 113 589	Chassis Mount Kit for Keysight M9018A Chassis

** For Cable Assemblies, Mating Modules, Patchcords - Visit VPC's Configurators at vpc.com/wire*

18 Module Solution • G18 Receiver for Discrete Wiring

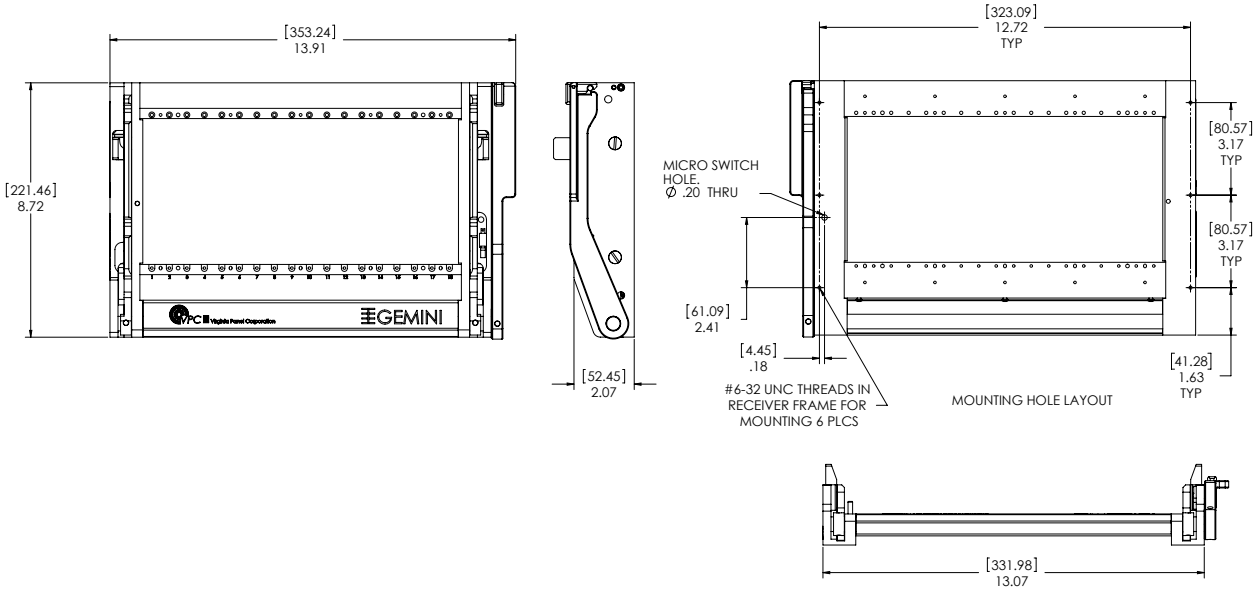

➤ Receiver, G18, 18 Module for Discrete Wiring • **Part # 310 120 101**

Receiver Specifications

Weight	6.9 lbs [3.130 kg]
Frame Material	Anodized aluminum
Slide Material	Nickel plated steel
Linkage, Handle, Latch Material	Stainless steel
Available Module Slots	18 positions
Cycle Life	20,000 cycles
Temperature	–55° C to 85° C
Max. Weight Support	25 lbs @ 6" [11 kg @ 15.24 cm]
Max. Mating Force	942 lbs [427.3 kg]

The lightweight and rugged 18 module receiver provides a solution that will accommodate larger ATE chassis' (PXI, VXI, SCXI). It allows immense versatility by affording space up to an 18 slot PXI chassis.

18 Module Solution • G18 Receiver with Slide Mounting Kit

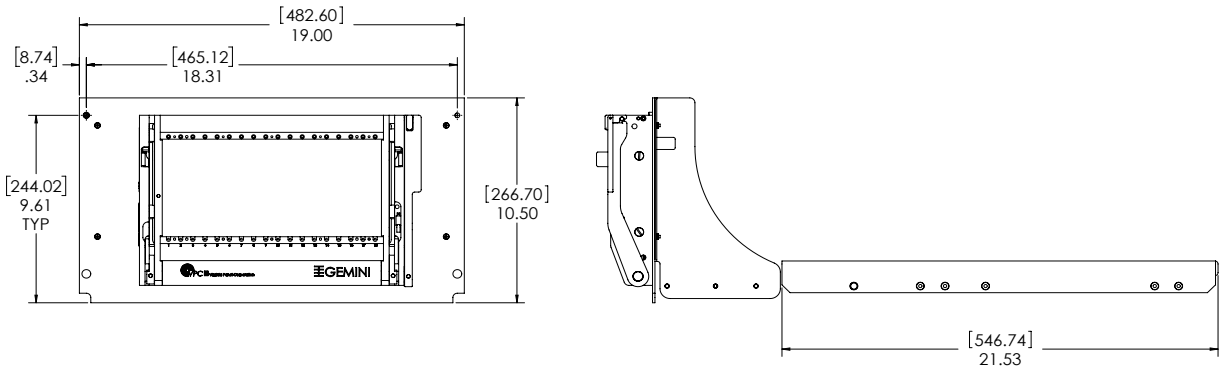

➤ Receiver, G18, 18 Module, with Slide Mounting (slide kit required) • **Part # 310 120 141**

Receiver Specifications

Weight	16.2 lbs [7.35 kg]
Frame Material	Anodized aluminum
Slide Material	Nickel plated steel
Linkage, Handle, Latch Material	Stainless steel
Mounting Plate, Mounting Flange, Instrument Bracket Material	Aluminum
Available Module Slots	18 positions
Cycle Life	20,000 cycles
Temperature	–55° C to 85° C
Max. Weight Support	25 lbs @ 6" [11 kg @ 15.24 cm]
Max. Mating Force	942 lbs [427.3 kg]

This G18 receiver is designed to work with a slide kit and includes a mounting bracket, flanges, and instrument bracket. A slide kit is required for use.

18 Module Solution • G18 Receiver with EMI Gasket

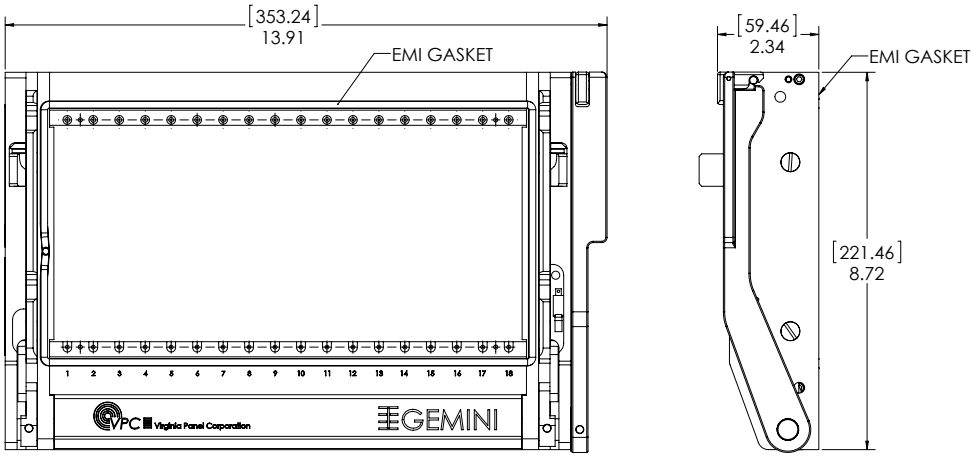

➤ Receiver, G18, 18 Module, EMI Gasket • **Part # 310 120 168**

Receiver Specifications

Weight	6.9 lbs [3.130 kg]
Frame Material	Anodized and clear chromated aluminum
Slide Material	Nickel plated steel
Linkage, Handle, Latch Material	Stainless steel
Available Module Slots	18 positions
Cycle Life	20,000 cycles
Temperature	–55° C to 85° C
Max. Weight Support	25 lbs @ 6" [11 kg @ 15.24 cm]
Max. Mating Force	942 lbs [427.3 kg]

This G18 receiver comes with a pre-installed gasket for EMI applications while maintaining all the features and benefits of the standard G18 receiver.

18 Module Solution • G18 ITA

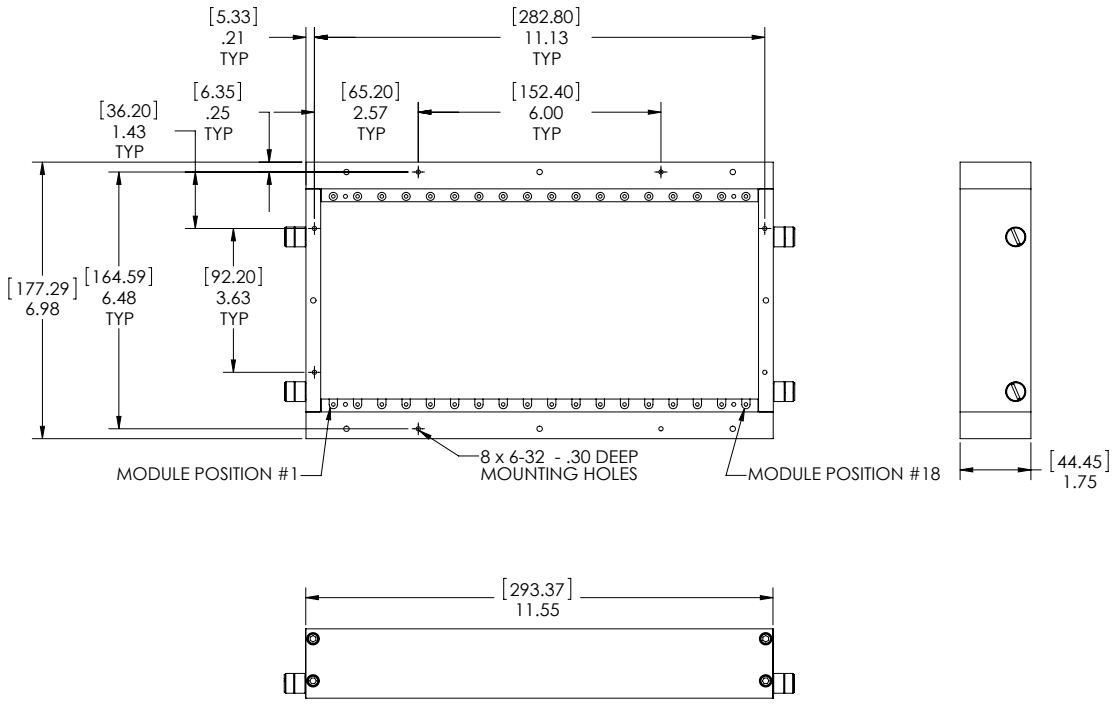

➤ ITA, G18, 18 Module • **Part # 410 120 111**

ITA Specifications

Weight	3.28 lbs [1.49 kg]
Frame Material	Chromated aluminum
Available Module Slots	18 positions
Cycle Life	20,000 cycles
Max. Mating Force	942 lbs [427.3 kg]
Temperature	–55° C to 85° C

You can mount a VPC enclosure or customize your own fixture to be attached to this ITA frame. A wide range of ITA modules are available separately for user configuration. This solution is perfect for any medium to high I/O application. The rugged aluminum frame provides secure mounting options for custom fixtures.

18 Module Solution • G18 ITA with PCB Capability

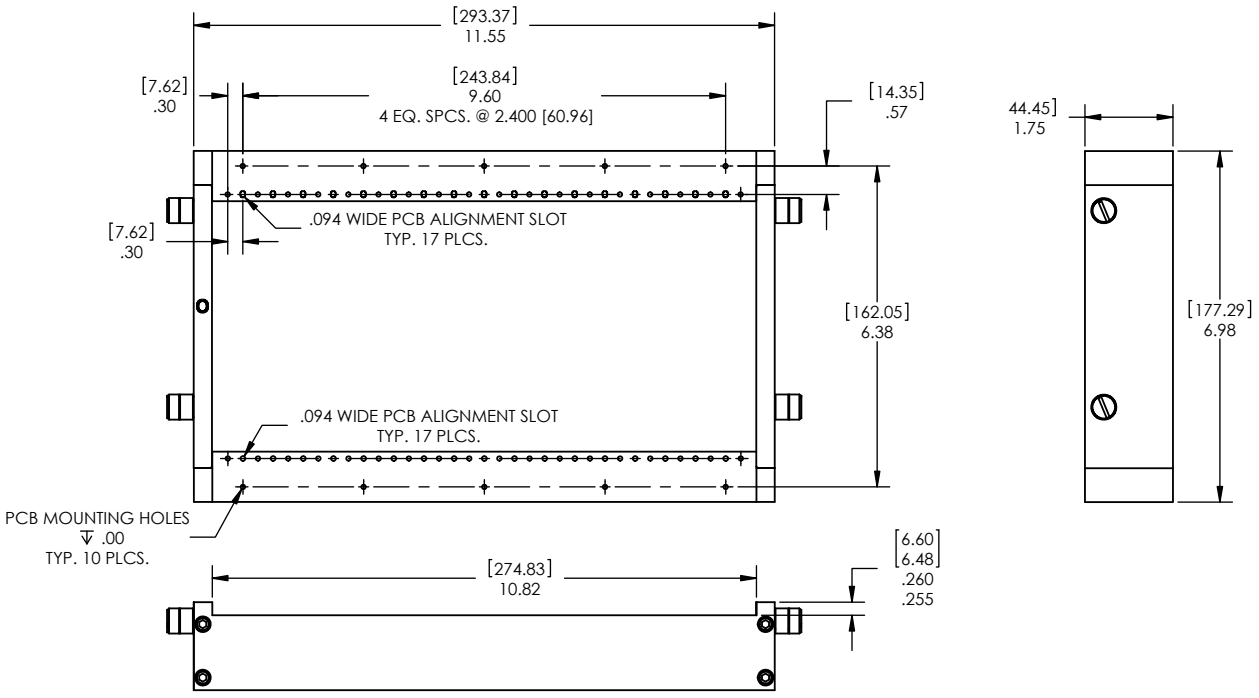

➤ ITA, G18, 18 Module for Discrete Wire and PCB Capability • **Part # 410 120 101**

ITA Specifications

Weight	3.35 lbs [1.497 kg]
Frame Material	Aluminum
Available Module Slots	18 positions
Cycle Life	20,000 cycles
Temperature	–55° C to 85° C

The G18 ITA with PCB capability has a recess on the wiring side of the ITA to provide a location for PCB cards to mount.

G18 • Accessories

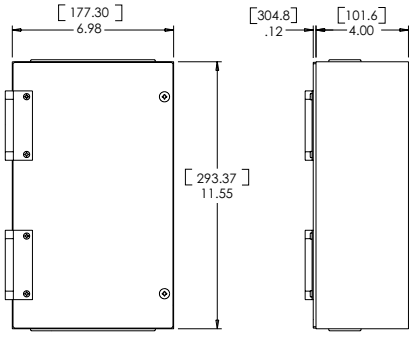

Made of aluminum, the enclosure body is painted gray and features a hinged cover plate with ¼ turn hardware that provides easy access to the ITA's wiring. The enclosure is secured to the ITA by eight socket head cap screws.

➤ Enclosure, 18 Module, Hinged Cover Plate, 4" Deep • **Part # 410 112 527**

This receiver protective cover protects contacts and modules when the receiver is not in use.

➤ Protective Cover, G18, Receiver
Part # 310 113 327

This aluminum ITA protective cover protects contacts and modules when the ITA is not in use.

➤ Protective Cover, G18, ITA
Part # 410 112 541

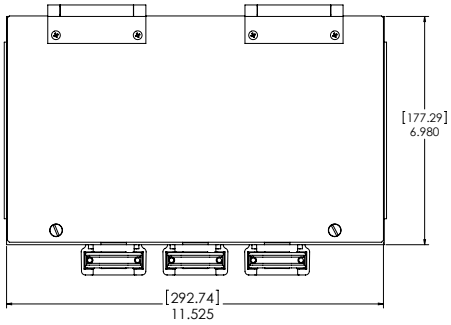

This aluminum enclosure is for ITA Part # 410 120 111 and allows your 18 module solution to be customized to your needs. This enclosure has three U-shaped cable clamps that allow a maximum cable bundle of 1.59" square per clamp. ITA strain relief plates are not needed.

➤ Enclosure, 18 Module with 3 Cable Clamps • **Part # 410 112 664**

Pull-Thru Solutions
with G20, G20x, and G40x.

Modular and Configurable

- Direct connection to instrument modules
- Pull through removal of instrumentation from the chassis backplane
- Accepts all standard 90 Series modules and i2 MX
- Reversible handle for right or left mounting

Scalability with i2 MX

- Connect directly to individual Pull-Thru Adapters with the i2 MX
- Convenient pull finger tabs allow easy removal of adapters
- Specially designed for EMI protection with nickel plated aluminium and an EMI gasket

Large Scale Options

G40x is a two tier, 48 module system that enables pull through removal of 40 VPC modules, Pull-Thru Adapters and test instrumentation as one piece. It also offers eight additional 90 Series module slots, plus space for two iCon modules, as needed.

Pull-Thru Adapters

- Variety of module configurations
- Multiple I/O options
- Instrument card protection
- i2 MX and high speed capability (SIM VTAC HSD)

Features and Benefits

- Adapters correspond with .8" PXI system slot requirements
- PCB adapter and instrument cards can be removed simultaneously
- Multiple configurations and I/O options

Platform Options

G20 and G20x are also available in a platform version. The platform provides support for your ITA and enclosure of up to 180 lbs [81.65 kg]. With the optional leg kit, up to 350 lbs [158.76 kg] can be supported.

20 Module Solution • G20 • Pull-Thru

The G20 Pull-Thru is a scalable solution that enables pull through capability for PCB applications. The G20 Pull-Thru integrates a wide variety of I/O in various module configurations. In addition to rack mounting, it is also available in a slide mount configuration.

Features and Benefits

- Screw mount locations correspond to the .80" centers of a PXI chassis, providing a 1:1 interface system
- Accepts all standard 90 Series modules and i2 MX
- Allows direct connection to instrument modules
- Enables pull through removal of connector modules and instrumentation from chassis backplane
- Precision engagement mechanism engineered to mate over 2,000 signal points in 6U height
- Modular and configurable
- Reversible handle for right or left mounting

G20 Receiver

G20 Receiver Mounted to Chassis

G20 Pull-Thru Slide Mount Configuration

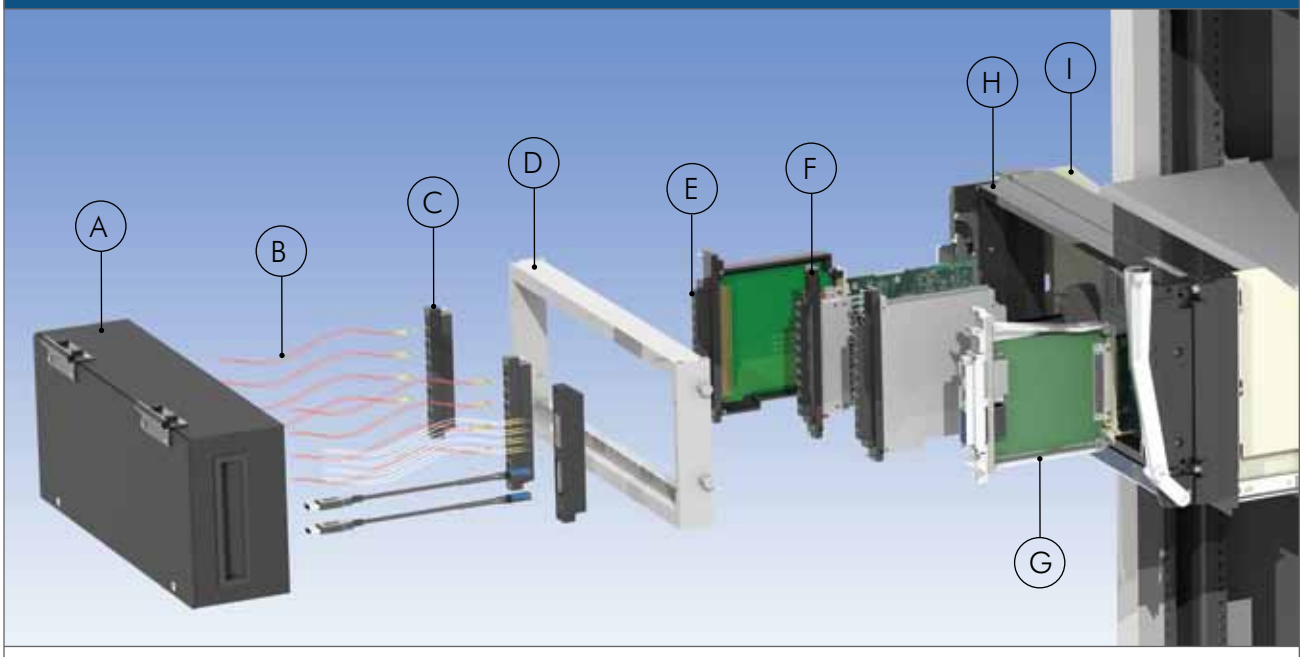

A. ITA Enclosure
B. ITA Patchcords
C. ITA Module
D. G20 ITA
E. Receiver Module
F. Receiver Module Carrier
G. Pull-Thru Adapter
H. G20 Receiver
I. Mounting Flanges

Part #	Description	*Visit VPC.com for full product details*

RECEIVERS

310 120 188	Receiver, G20, 20 Module, Pull-Thru (H)
310 120 193	Receiver, G20, 20 Module, Pull-Thru, EMI
310 120 192	Receiver, G20, 20 Module, Pull-Thru, with 15" Platform, Slide Mount (slide kit required)

ITAS (D)

410 120 199	ITA, G20, 20 Module, Pull-Thru
410 120 206	ITA, G20, 20 Module, Pull-Thru, Keying Feature
410 120 253	ITA, G20, 20 Module, Pull-Thru, EMI, 2"

MOUNTING FLANGES (I)

310 113 622	Mounting Flange Kit, G20/G20x Slide Mount, Pull-Thru, for NI PXI-1045 Chassis
310 113 644	Mounting Flange Kit, G20/G20x Slide Mount, Pull-Thru, for Pickering 40-923
310 113 653	Mounting Flange Kit, G20/G20x Slide Mount, Pull-Thru, for Keysight M9018A Chassis

ENCLOSURES (A)

410 112 790*	Enclosure, 20 Module, Hinged Cover Plate, 4" Deep
410 114 143*	Enclosure, 20 Module, Hinged Cover Plate, 12" Deep

**These enclosures are not compatible with the G20 ITA EMI Part # 410 120 223*

SLIDE KITS

310 113 410	24" Slide Kit, Fits 22"-26" Deep Racks, Supports 180lbs.
310 113 451	28" Slide Kit, Fits 26"-30" Deep Racks, Supports 180lbs.
310 113 411	30" Slide Kit, Fits 28"-32" Deep Racks, Supports 180lbs.
310 113 500	36" Slide Kit, Fits 34"-38" Deep Racks, Supports 180lbs.

PROTECTIVE COVERS

310 113 422	Protective Cover, G20, Receiver, Pull-Thru
410 112 797	Protective Cover, G20, ITA, Pull-Thru

ADAPTERS

510 109 461	PXI Pull-Thru Adapter, Single Slot, 1 Module Position
510 109 462	PXI Module Adapter, Single Slot, 1 Module Position

For a full list of PXI Pull-Thru Adapters - Visit vpc.com/products/pull-thru_adapters

20 Module Solution • G20 Receiver • Pull-Thru

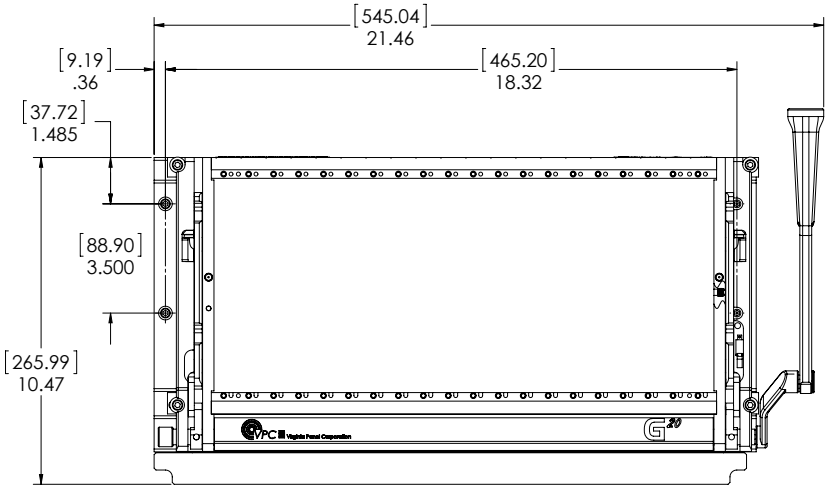

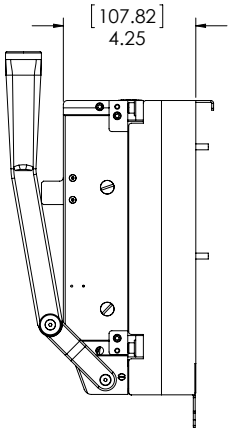

Reversible handle for right or left mounting

➤ Receiver, G20, 20 Module, Pull-Thru • **Part # 310 120 188**

Receiver Specifications

Frame Material	Anodized aluminum
Slide Material	Nickel plated steel
Linkage, Handle, Latch Material	Stainless steel
Available Module Slots	20 positions
Cycle Life	20,000 cycles
Temperature	–55° C to 85° C
Max. Weight Support	80 lbs @ 12" [36 kg @ 30.5 cm]
Max. Mating Force	1257 lbs [570.2 kg]

The G20 Pull-Thru receiver offers direct connection to instrument modules, enabling pull through removal of connector modules and instrumentation from the chassis backplane.

20 Module Solution • G20 Receiver Pull-Thru • EMI

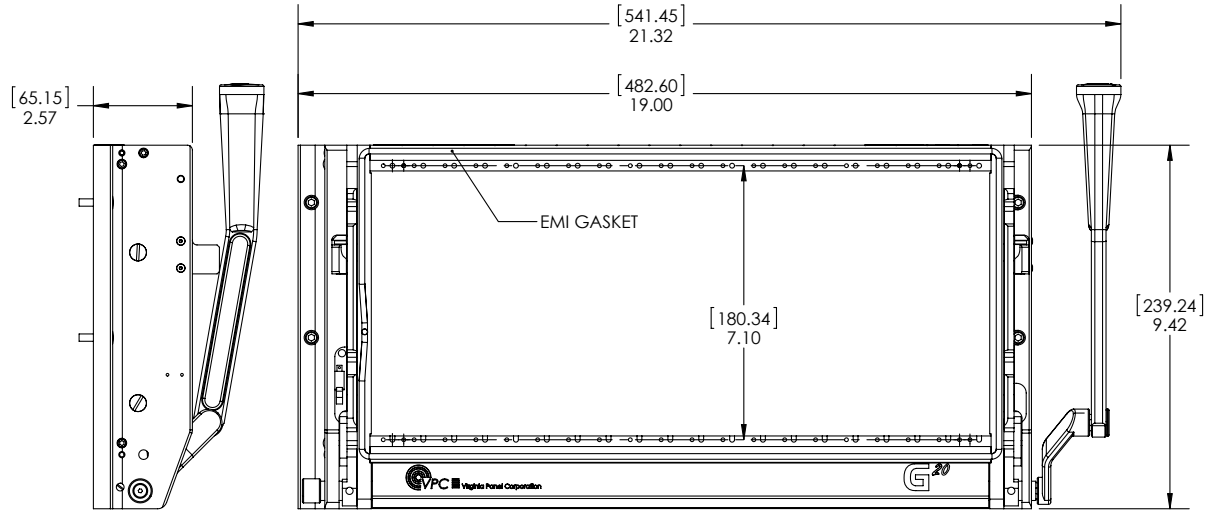

Reversible handle for right or left mounting

➤ Receiver, G20, 20 Module, Pull-Thru, EMI • **Part # 310 120 193**

Receiver Specifications

Frame Material	Anodized aluminum
Slide Material	Nickel plated steel
Linkage, Handle, Latch Material	Stainless steel
Available Module Slots	20 positions
Cycle Life	20,000 cycles
Temperature	–55° C to 85° C
Max. Weight Support	80 lbs @ 12" [36 kg @ 30.5 cm]
Max. Mating Force	1257 lbs [570.1 kg]

This G20 Pull-Thru EMI receiver has a pre-installed gasket for EMI applications while maintaining the same features and benefits of the standard G20 Pull-Thru receiver.

20 Module Solution • G20 ITA • Pull-Thru

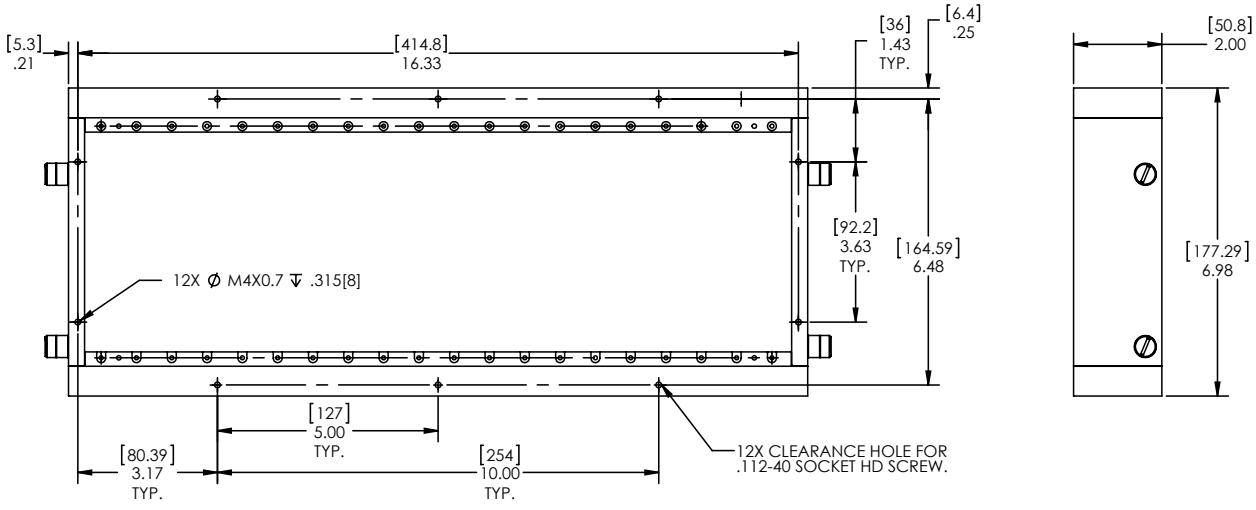

➤ ITA, G20, 20 Module, Pull-Thru • **Part # 410 120 199**

ITA Specifications

Frame Material	Chromated aluminum
Available Module Slots	20 positions
Cycle Life	20,000 cycles
Temperature	–55° C to 85° C
Max. Mating Force	1257 lbs [570.2 kg]

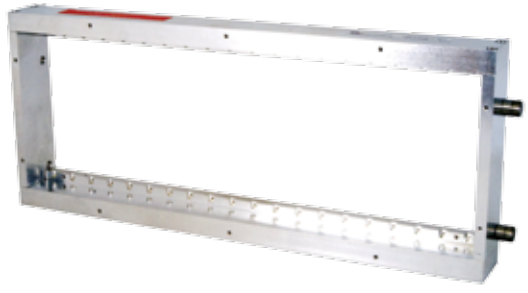

This G20 Pull-Thru ITA is intended to be used with the G20 receiver Part # 310 120 188. It is designed to front mount to the enclosure for ease of installation. A wide range of ITA modules are available separately for user configuration.

20 Module Solution • G20 ITA • Pull-Thru • EMI

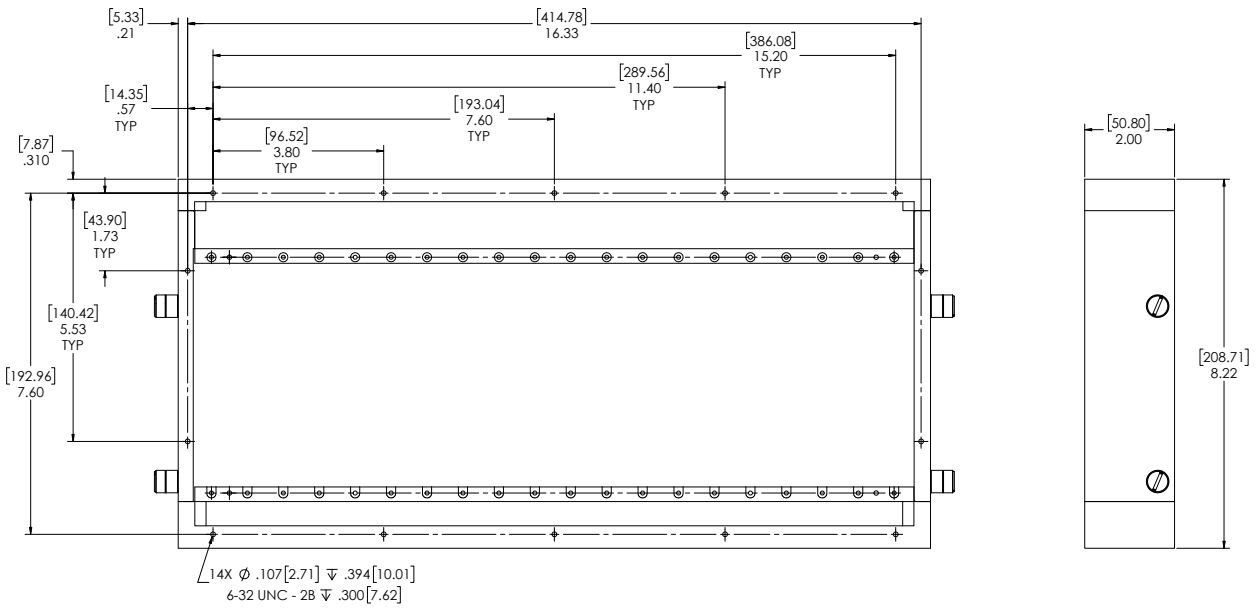

➤ ITA, G20, 20 Module, Pull-Thru, EMI, 2" • **Part # 410 120 223**

ITA Specifications

Frame Material	Chromated aluminum
Available Module Slots	20 positions
Cycle Life	20,000 cycles
Temperature	–55° C to 85° C
Max. Mating Force	1257 lbs [570.2 kg]

Accommodating 20 modules, this G20 Pull-Thru ITA EMI variant can be used with the G20 Pull-Thru EMI receiver Part # 310 120 193. The ITA frame is 2" in thickness.

28 Module Solution • G20x • Pull-Thru

The G20x Pull-Thru enables pull through capability for PCB applications with a capacity of up to 28 modules, eight dedicated to discrete wiring in an extended tier for higher I/O needs. The adaptable G20x Pull-Thru integrates a wide variety of I/O options in various module configurations to meet the needs of each test application. In addition to rack mounting, it is also available in a slide mount configuration.

Features and Benefits

- Screw mount locations correspond to the .80" centers of a PXI chassis, providing a 1:1 interface system
- 20 vertical modules with eight horizontal modules combine for 28 module capacity
- Accepts all standard 90 Series and iCon modules (with adapter) as well as i2 MX
- Enables pull through removal of connector modules and instrumentation from chassis backplane
- Precision engagement mechanism engineered to mate over 7,000 signal points in 7U height
- Modular and configurable
- Easy access to cables and test instrumentation
- Reversible handle for right or left mounting

G20x Receiver

G20x Receiver Mounted to Chassis

G20x - 28 Module Pull-Thru Slide Mount Configuration

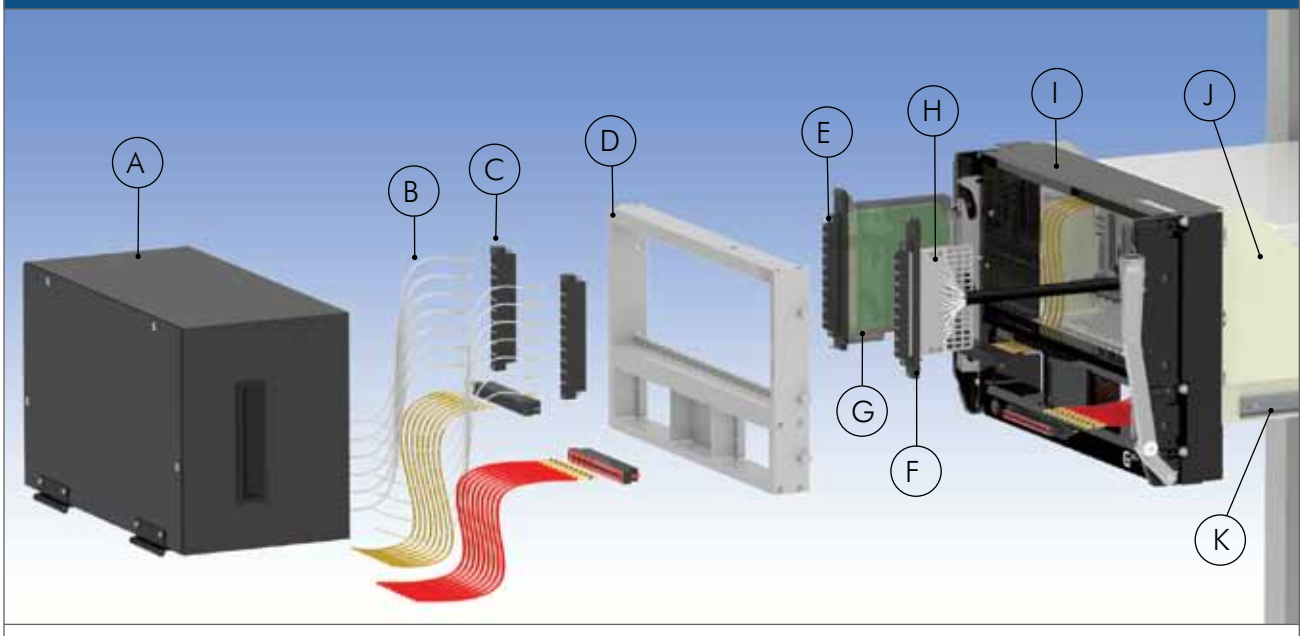

A. ITA Enclosure
B. ITA Patchcords
C. ITA Module
D. G20x ITA
E. Receiver Module
F. Receiver Module Carrier
G. PXI Pull-Thru Adapter
H. Cable Assembly
I. G20x Receiver
J. Mounting Flanges
K. Slide Kit

Part #	Description

Visit VPC.com for full product details

RECEIVERS (I)

310 120 186	Receiver, G20x, 28 Module, Pull-Thru
310 120 183	Receiver, G20x, 28 Module, Pull-Thru, EMI Gasket

ITAS (D)

410 120 210	ITA, G20x, 28 Module, Pull-Thru
410 120 253	ITA, G20x, 28 Module, Pull-Thru, EMI, 2"
410 120 199	ITA, G20, 20 Module, Pull-Thru

MOUNTING FLANGES (J)

310 113 622	Mounting Flange Kit, G20/G20x Slide Mount, Pull-Thru, for NI PXI-1045 Chassis
310 113 644	Mounting Flange Kit, G20/G20x Slide Mount, Pull-Thru, for Pickering 40-923
310 113 653	Mounting Flange Kit, G20/G20x Slide Mount, Pull-Thru, for Keysight M9018A Chassis

ENCLOSURE (A)

410 112 984	Enclosure, 28 Module, Hinged Cover Plate, 8" Deep

**This enclosure is not compatible with the G20x ITA EMI Part # 410 120 253*

SLIDE KITS (K)

310 113 410	24" Slide Kit, Fits 22"-26" Deep Racks, Supports 180lbs
310 113 451	28" Slide Kit, Fits 26"-30" Deep Racks, Supports 180lbs
310 113 411	30" Slide Kit, Fits 28"-32" Deep Racks, Supports 180lbs
310 113 500	36" Slide Kit, Fits 34"-38" Deep Racks, Supports 180lbs

ACCESSORIES

310 113 597	Protective Cover, G20x, Receiver, Pull-Thru
410 112 986	Protective Cover, G20x, ITA, Pull-Thru
310 113 606	Adapter Plate, Pull-Thru, Allows G20x & G40x Receiver to Accept iCon Modules
410 112 996	Adapter Plate, Pull-Thru, Allows G20x ITA to Accept iCon Modules

ADAPTERS

510 109 461	PXI Pull-Thru Adapter, Single Slot, 1 Module Position (G)
510 109 462	PXI Module Adapter, Single Slot, 1 Module Position (F)

For a full list of PXI Pull-Thru Adapters - Visit vpc.com/products/pull-thru_adapters

28 Module Solution • G20x Receiver • Pull-Thru

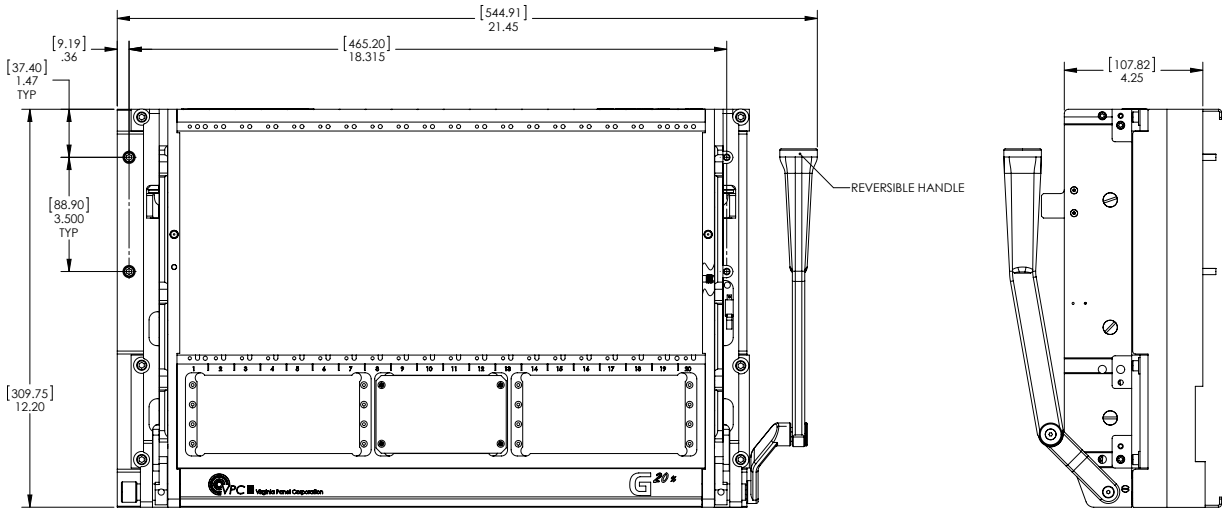

Reversible handle for right or left mounting

➤ Receiver, G20x, 28 Module, Pull-Thru • **Part # 310 120 186**

Receiver Specifications

Frame Material	Anodized aluminum
Slide Material	Nickel plated steel
Linkage, Handle, Latch Material	Stainless steel
Available Module Slots	20 vertical module positions and eight horizontal module positions
Cycle Life	20,000 cycles
Temperature	–55° C to 85° C
Max. Weight Support	80 lbs @ 12" [36 kg @ 30.5 cm]
Max. Mating Force	1257 lbs [570.2 kg]

The G20x Pull-Thru receiver offers the same features of the G20 Pull-Thru system and adds an additional eight modules in an extended tier for higher I/O needs.

28 Module Solution • G20x Receiver Pull-Thru • EMI

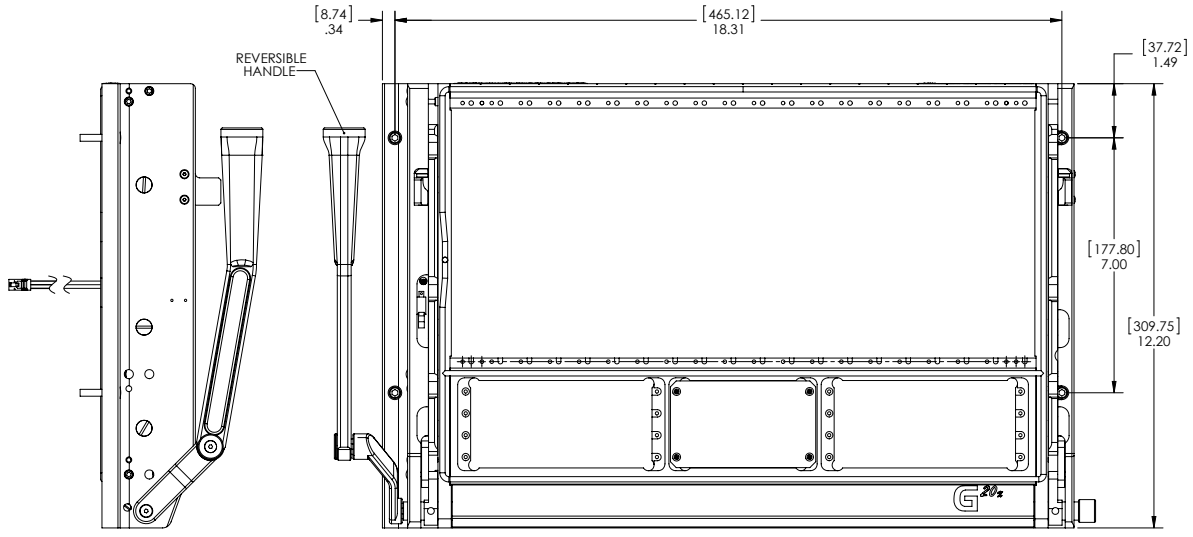

Reversible handle for right or left mounting

➤ Receiver, G20x, 28 Module, Pull-Thru, EMI Gasket • **Part # 310 120 183**

Receiver Specifications

Frame Material	Anodized and clear chromated aluminum
Slide Material	Nickel plated steel
Linkage, Handle, Latch Material	Stainless steel
Available Module Slots	20 vertical module positions and eight horizontal module positions
Cycle Life	20,000 cycles
Temperature	–55° C to 85° C
Max. Weight Support	80 lbs @ 12" [36 kg @ 30.5 cm]
Max. Mating Force	1257 lbs [570.2 kg]

This G20x Pull-Thru EMI receiver comes with a pre-installed gasket for EMI applications.

28 Module Solution • G20x ITA • Pull-Thru

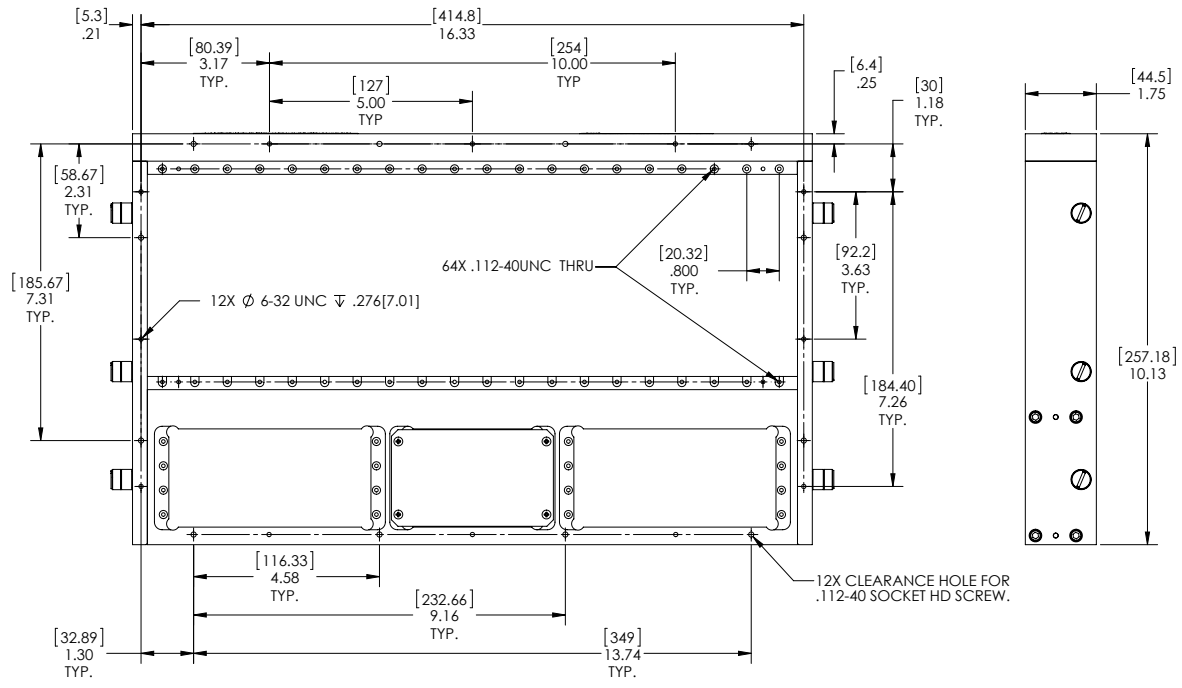

➤ ITA, G20x, 28 Module, Pull-Thru • **Part # 410 120 210**

ITA Specifications

Frame Material	Chromated aluminum
Available Slots	20 vertical module positions and eight horizontal module positions
Cycle Life	20,000 cycles
Temperature	–55° C to 85° C
Max. Mating Force	1257 lbs [570.2 kg]

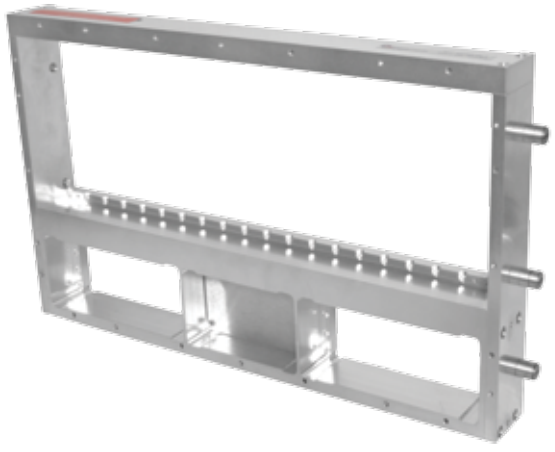

Accommodating 28 modules, the G20x Pull-Thru ITA can be used in a variety of applications to make the required connection to the G20x Pull-Thru receiver Part # 310 120 186.

28 Module Solution • G20x ITA Pull-Thru • EMI

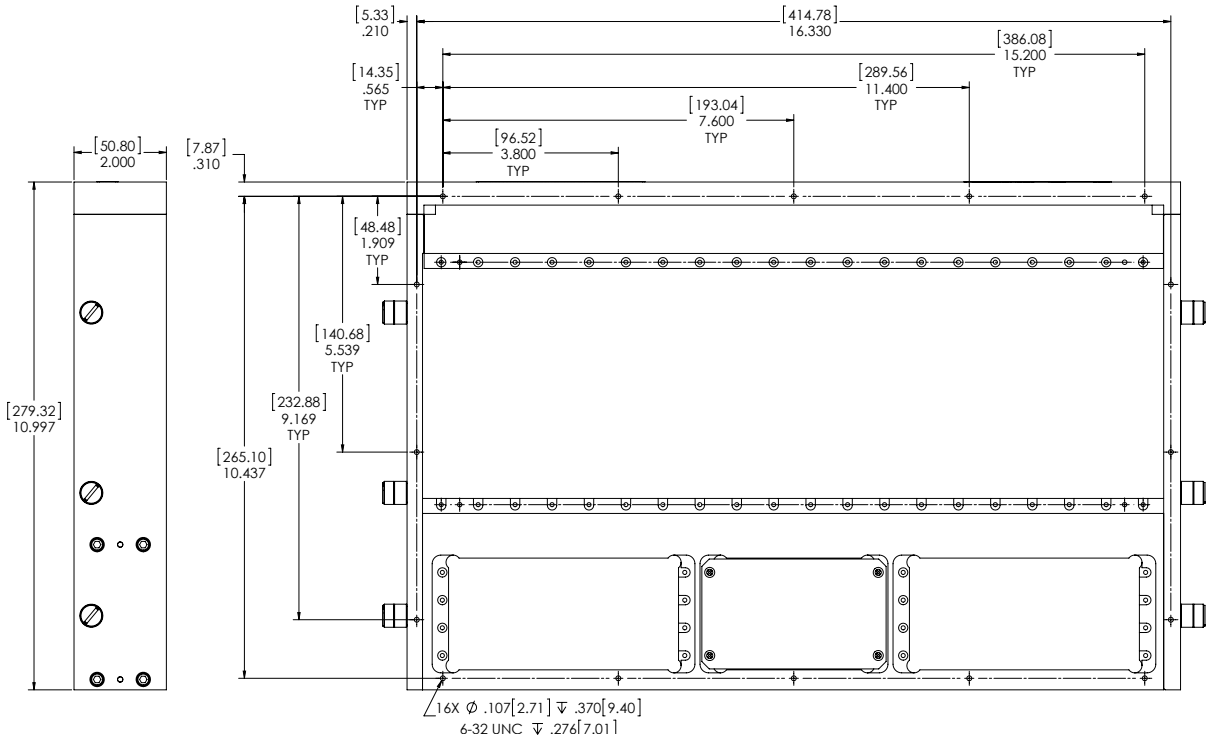

➤ ITA, G20x, 28 Module, G20x, Pull-Thru, EMI, 2" • **Part # 410 120 253**

ITA Specifications

Frame Material	Chromated aluminum
Available Slots	20 vertical module positions and eight horizontal module positions
Cycle Life	20,000 cycles
Temperature	–55° C to 85° C
Max. Mating Force	1257 lbs [570.2 kg]

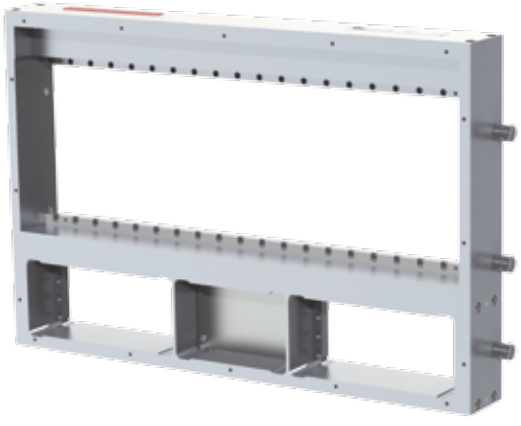

Accommodating 28 modules, this G20x Pull-Thru variant can be used with the G20x Pull-Thru EMI receiver Part # 310 120 183. The ITA frame is 2" in thickness.

G20/G20x Pull-Thru • Accessories

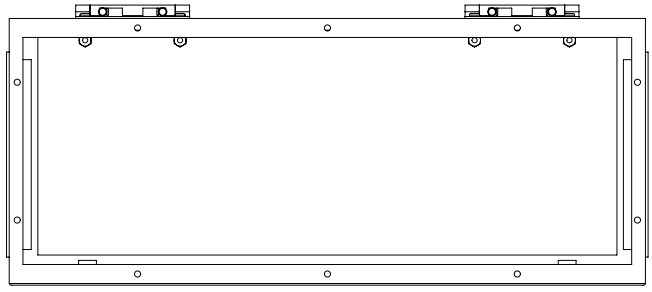

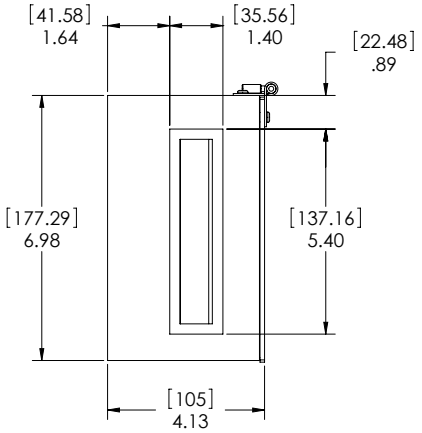

The 20 module enclosure is made of aluminum, painted black, and secured to the ITA by eight socket head cap screws (included). It has a depth of 4".

➤ Enclosure, 20 Module, Hinged Cover Plate, 4" Deep • **Part # 410 112 790**

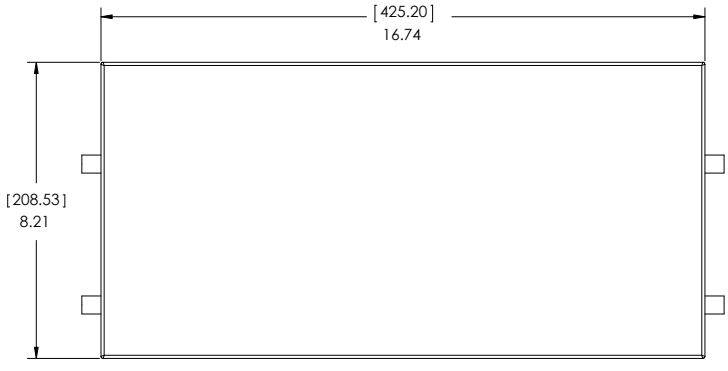

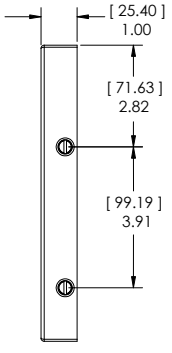

The G20 Pull-Thru receiver protective cover attaches securely to your receiver for easy and effective protection of contacts and modules.

➤ Protective Cover, G20, Receiver, Pull-Thru • **Part # 310 113 422**

G20/G20x Pull-Thru • Accessories

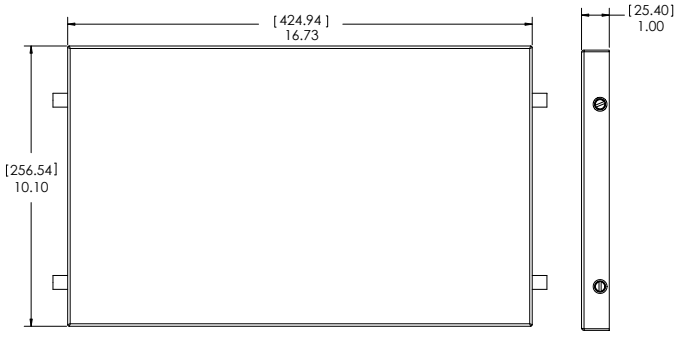

The receiver protective cover protects contacts and modules when the receiver is not in use.

➤ Protective Cover, G20x, Receiver, Pull-Thru, EMI • **Part # 310 113 597**

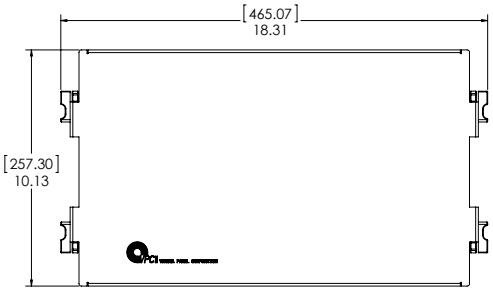

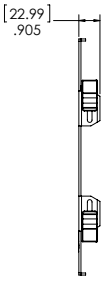

The ITA protective cover protects contacts and modules when the ITA is not in use.

➤ Protective Cover, G20x, ITA, Pull-Thru • **Part # 410 112 986**

48 Module Solution • G40x • Pull-Thru

The G40x Pull-Thru is a two tier, 48 module system that enables pull through removal of 40 VPC modules, InterConnect Adapters, and test instrumentation in one piece. It offers eight additional standard 90 Series module slots, as well as space for two iCon modules as needed. The G40x Pull-Thru is slide mounted, allowing easy access to the discrete-wiring modules.

Features and Benefits

- Screw mount locations correspond to the .80" centers of a PXI chassis, providing a 1:1 interface system
- 40 vertical modules with eight horizontal modules combine for 48 module capacity
- Accepts all standard 90 Series and iCon modules as well as i2 MX
- Enables pull through removal of connector modules and instrumentation from chassis backplane
- Precision engagement mechanism engineered to mate over 11,000 signal points in 12U height
- Modular and configurable
- Reversible handle for right or left mounting

G40x Receiver

G40x Receiver Mounted to Chassis

G40x - 48 Module Pull-Thru Slide Mount Configuration

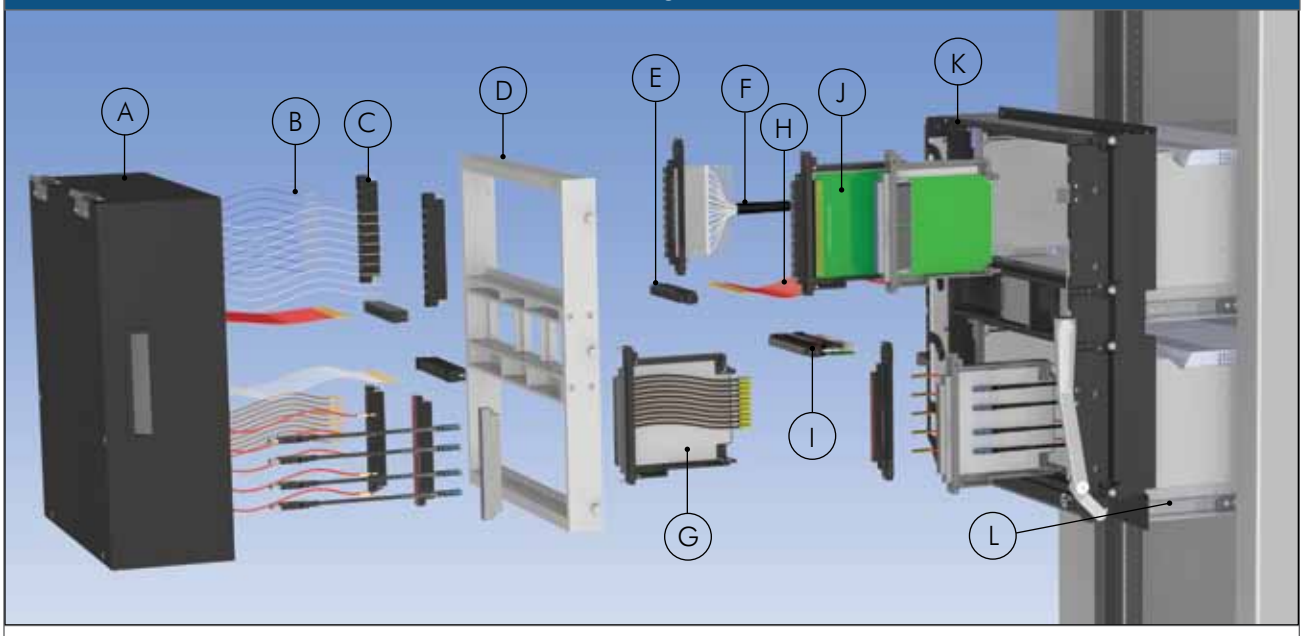

A. G40x Enclosure
B. ITA Patchcords
C. ITA Modules
D. G40x ITA
E. Receiver Modules
F. Receiver Cable Assembly
G. Wired Pull-Thru Adapter
H. Receiver Patchcords
I. Receiver PCB Adapter
J. PXI Pull-Thru Adapter
K. G40x Receiver
L. Slide Kit

Part #	Description	*Visit VPC.com for full product details*

RECEIVER

310 120 163	Receiver, G40x, 48 Module, Pull-Thru, with Slide Mounting (slide kit required) (K)

ITAS (D)

410 120 246	ITA, G40x, 48 Module, Pull-Thru
410 120 210	ITA, G20x, 28 Module, Pull-Thru
410 120 199	ITA, G20, 20 Module, Pull-Thru

ENCLOSURE (A)

410 114 115	Enclosure, 48 Module, Hinged Cover Plate, 6" Deep

If you do not see an enclosure that meets your needs, please visit vpc.com/products/enclosures for more options.

SLIDE KITS (L)

310 113 411	30" Slide Kit, Fits 28"-32" Deep Racks, Supports 180lbs
310 113 451	28" Slide Kit, Fits 26"-30" Deep Racks, Supports 180lbs
310 113 500	36" Slide Kit, Fits 34"-38" Deep Racks, Supports 180lbs

ACCESSORIES

310 113 686	Protective Cover, G40x, Receiver, Pull-Thru
410 114 144	Protective Cover, G40x, ITA, Pull-Thru, Aluminum
310 113 606	Adapter Plate, Pull-Thru, Allows G20x & G40x Receiver to Accept iCon Modules
410 112 996	Adapter Plate, Pull-Thru, Allows G20x ITA to Accept iCon Modules

ADAPTERS (J)

510 109 461	PXI Pull-Thru Adapter, Single Slot, 1 Module Position
510 109 462	PXI Module Adapter, Single Slot, 1 Module Position

For a full list of PXI Pull-Thru Adapters - Visit vpc.com/pull-thru_adapters

48 Module Solution • G40x Receiver • Pull-Thru

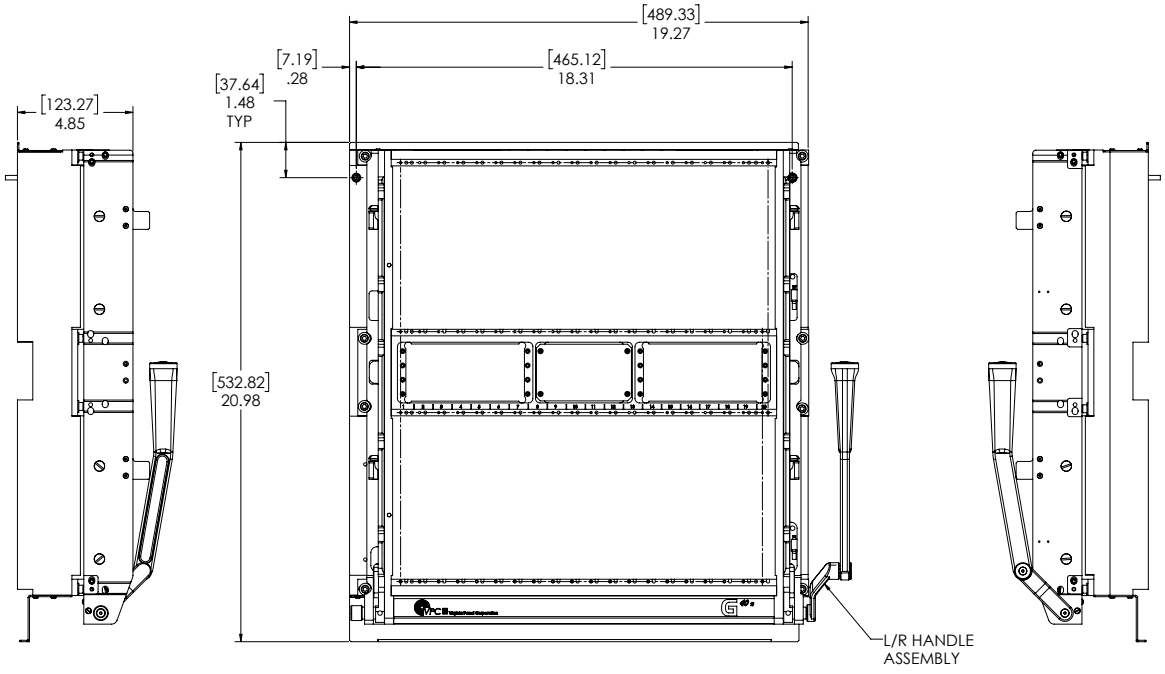

➤ Receiver, G40x, 48 Module, Pull-Thru, for Slide Mounting (Slide Kit Required) • **Part # 310 120 163**

Receiver Specifications

Weight	31.4 lbs [14.2 kg]
Frame Material	Anodized aluminum
Slide Material	Nickel plated steel
Linkage, Handle, Latch Material	Stainless steel
Available Module Slots	40 vertical + eight horizontal + optional 320 position module or two iCon modules (with adapter)
Cycle Life	20,000 cycles
Max. Mating Force	1257 lbs [570.2 kg]
Temperature	–55° C to 85° C
Max. Weight Support	360 lbs @ 12" [163.3 kg @ 30.5 cm]

The G40x Pull-Thru receiver is a two tier, 48 module system that enables pull through removal of 40 VPC modules, InterConnect Adapters, and test instrumentation in one piece. It offers eight standard 90 Series module slots, plus space for two iCon modules, as needed. The G40x Pull-Thru is slide mounted, to enable easy access to the discrete-wiring modules.

48 Module Solution • G40x ITA • Pull-Thru

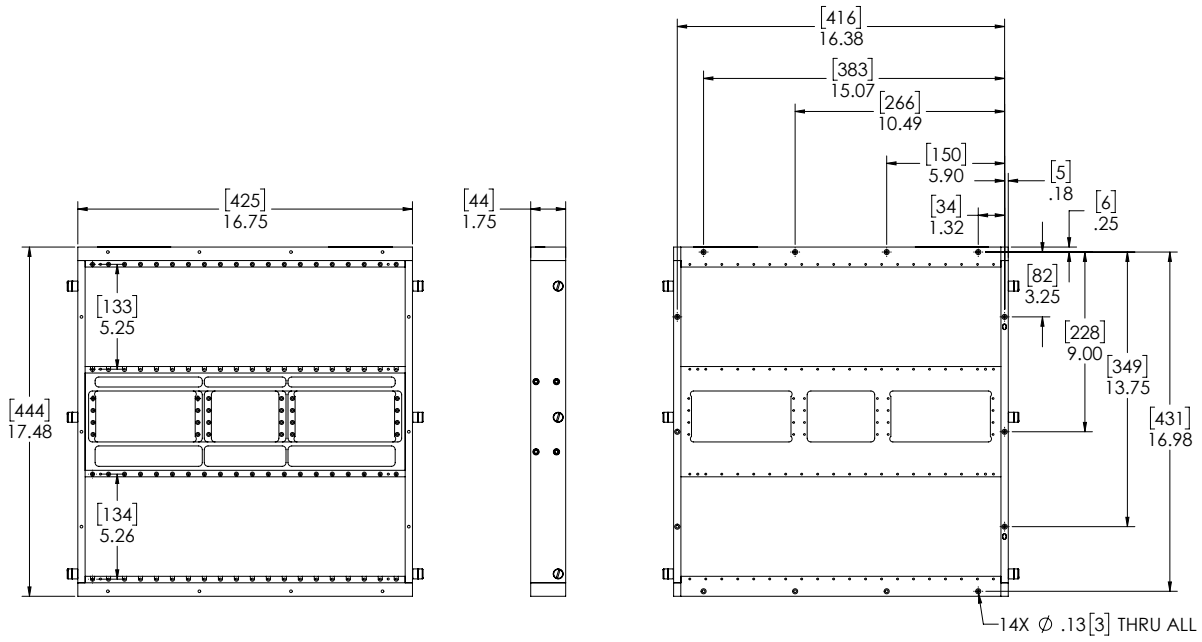

ITA, G40x, 48 Module, Pull-Thru • **Part # 410 120 246**

ITA Specifications

Weight	31.4 lbs [14.2 kg]
Frame Material	Chromated aluminum
Available Module Slots	40 vertical + eight horizontal + optional 320 position module or two iCon modules (with adapter)
Cycle Life	20,000 cycles
Temperature	–55° C to 85° C
Max. Mating Force	1257 lbs [570.2 kg]
Max. Weight Support	80 lbs @ 12" [36 kg @ 30.5 cm]

This 48 module Pull-Thru ITA can be used in a number of applications to accomplish the required connection to the unit under test (UUT). You can mount a VPC enclosure or customize your own fixture to be attached to the ITA frame. A wide range of ITA modules are available separately for user configuration.

G40x Pull-Thru • Accessories

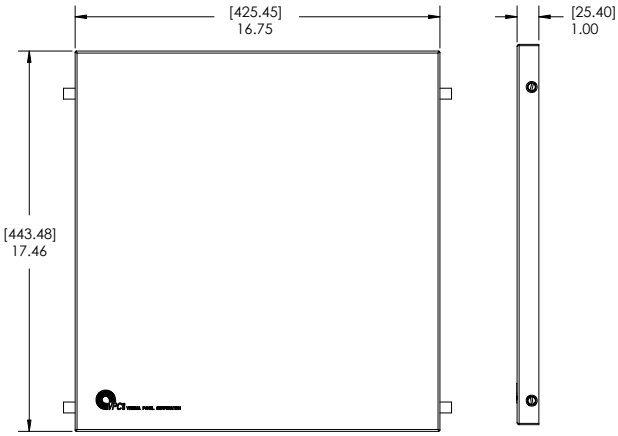

The receiver protective cover protects contacts and modules when the receiver is not in use.

➤ Protective Cover, G40x, Receiver, Pull-Thru • **Part # 310 113 686**

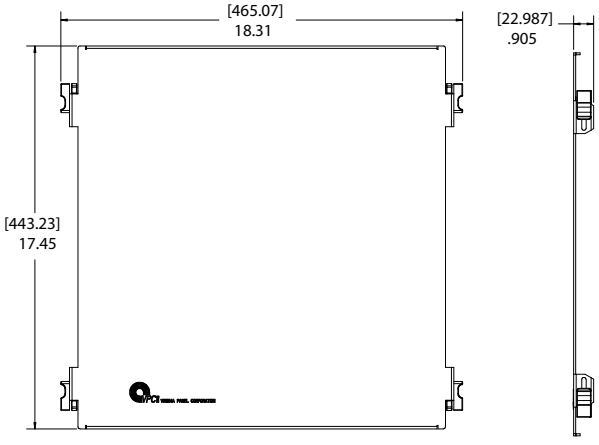

The ITA protective cover protects contacts and modules when the ITA is not in use.

➤ Protective Cover, G40X, ITA, Pull-Thru, Aluminum • **Part # 410 114 144**

G40x Pull-Thru • Accessories

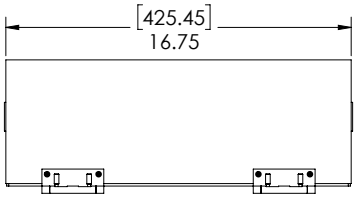

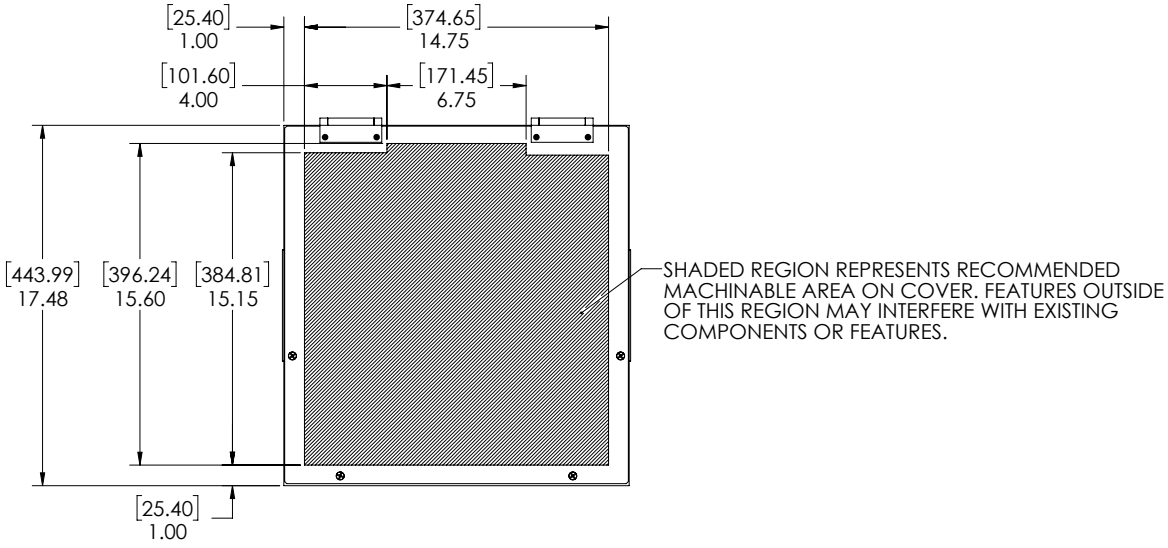

This 48 module enclosure features a hinged cover plate with ¼-turn hardware that provides easy access to the ITA wiring.

➤ Enclosure, 48 Module, Hinged Cover Plate, 6" Deep • **Part # 410 114 115**

Explore the choices
with 9025 and 9050 systems.

9050

Rack Mounting Applications

- The high I/O systems are ideal for rack mounting applications
- Mount to a Vertical Hinged Mounting Frame or slides for access to wiring and instrumentation
- Time savings with rapid changeover

PXI

Updated 9025 Receiver

- Enhanced mechanical advantage with 30% reduced handle force and lighter weight
- Available in rack and slide mount configurations
- Platform options with the 9025TR
- Silk screening enables easy installation and coordination of ITA and receiver modules

9025

Customize for Various Testing Needs

- Multiple ITAs are pre-configured for different tests
- Intermix connector modules to build custom interfaces
- Accommodate vacuum or mechanical fixturing

9050

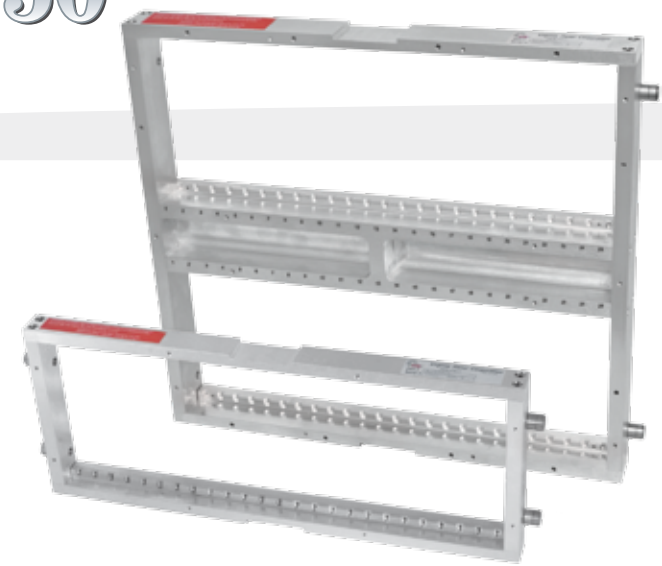

Standard ITAs

- Buy VPC ITAs with our standard enclosures, or attach them to your custom enclosure
- Customized enclosures available to fit your testing needs
- Guarantee a precise fit to VPC receivers
- Front and rear mount ITAs enable easy attachment to enclosures

Pre-Wired InterConnect Adapters

- Pre-wired InterConnect adapters act as a compact funnel for wiring directly to VXI cards
- Plug the connectors on the back of the funnel to the VXI card and the test system is ready to use
- Different connector plates are available to cable out of the InterConnect adapters

VXI PLUG & PLAY

25 Module Solution • 9025

VPC's receivers meet the standards which are essential to support advanced Mass InterConnect requirements. The 9025 can be adapted to accommodate vacuum or mechanical fixturing. Connector modules can be intermixed to establish custom interfaces which are ideal for functional and system testing applications.

Features and Benefits

- Precision engagement mechanism engineered to mate over 5,900 contacts
- Standard ITA frame accommodates multiple enclosure types for a variety of fixture options
- Modular and reconfigurable for evolving tests requirements
- Reliable connectivity beyond 20,000 cycles
- Quick and easy integration and maintenance
- Wide range of I/O options including signal, coaxial, power, pneumatic, vacuum, thermocouple, fiber optic, and PCB solutions
- An integrated microswitch shuts power off when the ITA disengages
- Designed to fit a standard 19" rack
- Mounting options include: Vertical Hinged Mounting Frames and slide mount

9025 Receiver

Slide Mount 9025 Receiver

9025 Slide Configuration

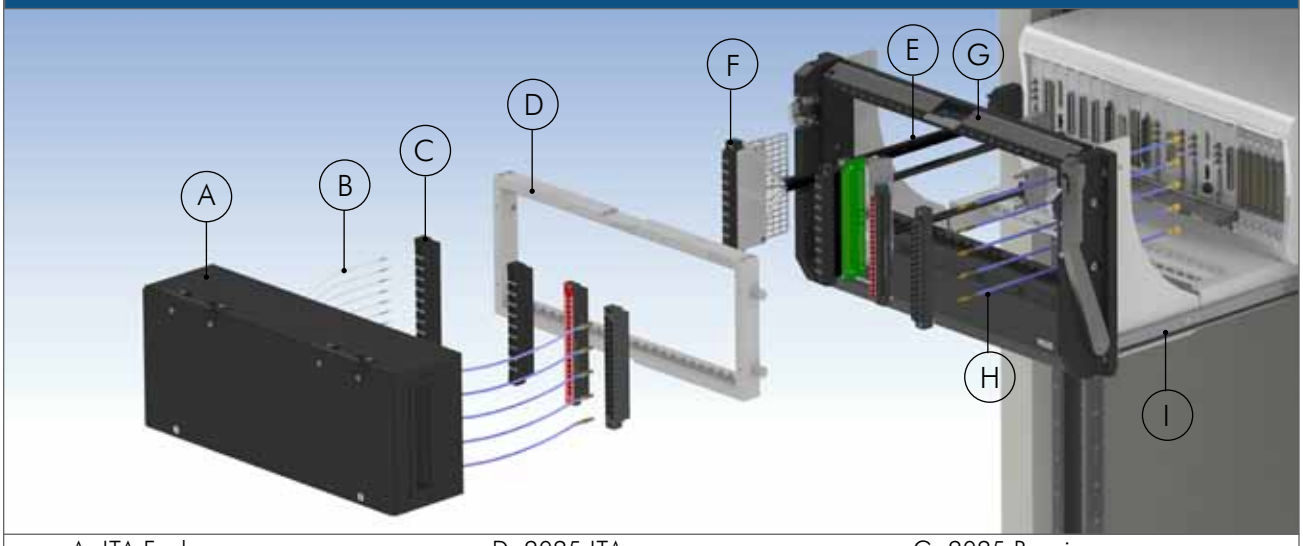

A. ITA Enclosure
B. ITA Patchcords
C. ITA Module
D. 9025 ITA
E. Receiver Cable Assembly
F. Receiver Module
G. 9025 Receiver
H. Receiver Patchcords
I. Slide Kit

Part #	Description

Visit VPC.com for full product details

RECEIVERS (G)

310 104 437	Receiver, 9025, 25 Module, with Slide Mounting Kit (slide kit required)
310 104 420	Receiver, 9025, 25 Module, Single Tier
310 104 431	Receiver, 9025, 25 Module, EMI Gasket

ITAS

410 104 111	ITA, 9025, 25 Module, Single Tier (D)
410 104 304	ITA, 9025, 25 Module, EMI, with 8" Enclosure
410 104 306	ITA, 9025, 25 Module, Single Tier, for EMI
410 104 505	ITA, 9025, 25 Module, Single Tier, 1.5" Thick

ENCLOSURES (A)

410 112 198	Enclosure, 25 Module, Hinged Cover Plate, 4" Deep
410 112 273	Enclosure, 25 Module, Hinged Cover Plate, 8" Deep
410 112 368	Enclosure, 25 Module, Large

If you do not see an enclosure that meets your needs, please visit vpc.com/products/enclosures for more options.

SLIDE KITS (I)

310 113 451	28" Slide Kit, Fits 26"-30" Deep Racks, Supports 180lbs
310 113 411	30" Slide Kit, Fits 28"-32" Deep Racks, Supports 180lbs
310 113 500	36" Slide Kit, Fits 34"-28" Deep Racks, Supports 180lbs

MOUNTING FRAMES

310 113 316	Vertical Hinged Mounting Frame, 9025, 8U
310 113 320	Vertical Hinged Mounting Frame, 9025, 9U

For other mounting options, please visit vpc.com/products/mounting_options

ADAPTER PLATE

410 112 976	Adapter Plate, 9050 Enclosure to 9025 ITA (ITA Positioned on Lower Part of Enclosure)

ACCESSORIES

310 113 163	Protective Cover, 9025, 9025VXI & 9025TR, Receiver
410 112 578	Protective Cover, 9025, 9025VXI & 9025TR, ITA
310 113 542	Instrument Bracket Mounting Block Kit, for use with Pickering PXI Chassis

** For Cable Assemblies, Mating Modules, Patchcords - Visit VPC's Configurators at vpc.com/wire*

25 Module Solution • 9025TR

The 9025TR has over twice the I/O as the G12 and is outfitted with the same 20" platform to support your enclosure while engaging and disengaging. The front-mount ITA is user-friendly, allowing the enclosure or fixture to be fastened from the mating side. The docking feature of the 9025TR provides an easy way of guiding a fixture into position prior to engagement. Runners along the platform provide a smooth-sliding action, ideal when using fixtures up to 180 lbs. VPC modules can be intermixed to establish flexible custom interfaces which are ideal for functional and system testing applications. The 9025TR uses all standard modules and contacts, and includes a microswitch.

Features and Benefits

- 20" platform supports ITA when not in use (up to 180 lbs)
- Redesigned handle offers an offset link to accommodate larger ITA enclosures
- Handle can be installed on either the right or left side of the receiver
- Accommodates over 5,900 signal contacts
- Accessories available: slide kit, support legs, retractable keyboard kit, and instrument bracket with strain relief

9025TR Receiver

Slide Mount 9025TR Receiver

9025TR Slide Configuration

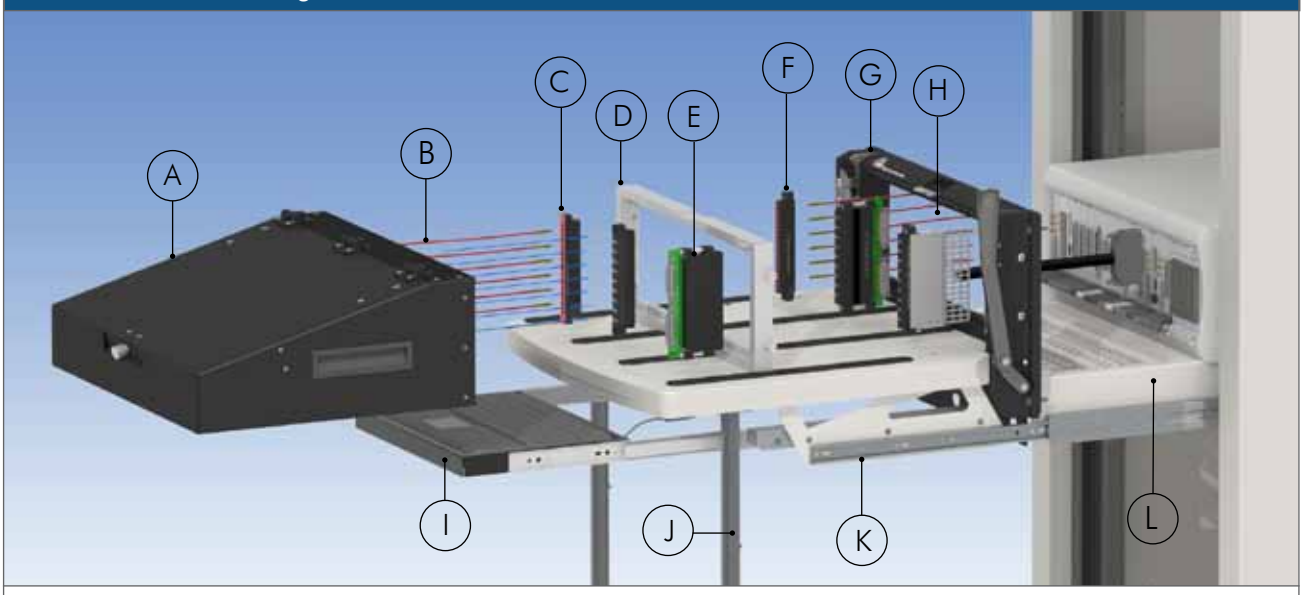

A. ITA Enclosure
B. ITA Patchcords
C. ITA Module
D. 9025TR ITA
E. ITA PCB Adapter
F. Receiver Module
G. 9025TR Receiver with Platform
H. Receiver Patchcords
I. Keyboard Tray
J. Adjustable Leg Kit
K. Slide Kit
L. Instrument Bracket

Part #	Description	*Visit VPC.com for full product details*

RECEIVERS (G)

310 104 435	Receiver, 9025TR, 25 Module, with 20" Platform (slide kit required)
310 104 436	Receiver, 9025TR, 25 Module, with 20" Platform, for Tabletop
310 104 447	Receiver, 9025TR, 25 Module, with 15" Platform, for Tabletop

ITAS (D)

410 104 111	ITA, 9025, 25 Module, Single Tier
410 104 505	ITA, 9025, 25 Module, Single Tier, 1.5" Thick

ENCLOSURES (A)

410 112 273	Enclosure, 25 Module, Hinged Cover Plate, 8" Deep
410 112 368	Enclosure, 25 Module, Large
410 112 823	Enclosure, 25 Module, Hinged Cover Plate, 15" Deep
410 114 103	Enclosure, 25 Module, Front Mount, Sloped, with G10 Cover
410 114 004	Enclosure, 25 Module, Front Mount, Sloped, for 9025TR

If you do not see an enclosure that meets your needs, please visit vpc.com/products/enclosures for more options.

SLIDE KITS (K)

310 113 409	20" Slide Kit, Fits 18"–22" Deep Racks, Supports 180 lbs.
310 113 410	24" Slide Kit, Fits 22"–26" Deep Racks, Supports 180 lbs.
310 113 451	28" Slide Kit, Fits 26"–30" Deep Racks, Supports 180 lbs.
310 113 411	30" Slide Kit, Fits 28"–32" Deep Racks, Supports 180 lbs.
310 113 500	36" Slide Kit, Fits 34"–38" Deep Racks, Supports 180 lbs.

ACCESSORIES

310 113 163	Protective Cover, 9025, 9025VXI & 9025TR, Receiver
410 112 578	Protective Cover, 9025, 9025VXI & 9025TR, ITA
410 114 133	Enclosure Accessory Kit, Gas Spring for Sloped Enclosure
310 113 424	Cable Tray, Slide Configuration, for Strain Relief and Cable Management, for 28" and longer slides only
310 113 439	Keyboard Tray Kit, Slide Configuration, Keyboard with Touchpad Mouse Included (I)
310 113 453	Instrument Bracket Kit with Strain Relief, for 28" and longer slides only (L)
310 113 494	Rack Extender Kit, 9025TR, 1.5" Deep
310 113 566	Adjustable Leg Kit for the 20" Platform, 27"-36", Supports 350 lbs. (J)

25 Module Solution • 9025 VXI

The 9025 VXI receiver is designed for use with our pre-wired InterConnect adapters, but can also accommodate discrete wired modules using retainer blocks. One to four modules attach to the InterConnect adapter, (a hollow shell with a removable side for discrete or printed wiring), which in turn is attached to the VXI card. This connector "funnel" forms a complete VXI module, which is easily inserted or removed from the VXI mainframe for maximum flexibility in testing applications. The InterConnect adapter also provides room for driver sensors or personality electronics. External cabling to the card is accomplished by a cable clamp or connector located on the top or bottom of the InterConnect adapter.

Features and Benefits

- VXI receivers incorporate a left-side handle on a telescoping shaft for use with enclosures larger than the ITA
- Precision engineered engagement mechanism
- Standard ITA frames accommodate multiple enclosure types for a variety of fixture options
- Modular and reconfigurable for evolving test requirements.
- Reliable connectivity beyond 20,000 cycles
- Quick and easy integration and maintenance
- Wide range of I/O options including signal, coaxial, power, pneumatic, vacuum, thermocouple, fiber optic and PCB solutions
- Designed to fit a standard 19" rack
- Integrated microswitch shuts power off when the ITA disengages
- VXI Plug & Play Kit allows the VXI receiver to hinge down offering easy access to InterConnect adapters and VXI test instrumentation

9025 VXI Receiver

Rack-Mounted 9025 VXI

9025 VXI Rack Mount Configuration

A. ITA Enclosure
B. ITA Patchcords
C. ITA Module
D. 9025 ITA
E. 9025 VXI Receiver
F. VXI Plug and Play Plate
G. Receiver Module
H. Receiver Patchcords
I. InterConnect Adapter
J. Module Retainer Blocks
K. Cable Assembly*

Part #	Description	*Visit VPC.com for full product details*

RECEIVERS

310 104 127	Receiver, 9025, 25 Module VXI, C-Size Interlocking (E)

ITAS

410 104 111	ITA, 9025, 25 Module, Single Tier (D)
410 104 505	ITA, 9025, 25 Module, Single Tier, 1.5" Thick

ENCLOSURES (A)

410 112 198	Enclosure, 25 Module, Hinged Cover Plate, 4" Deep
410 112 273	Enclosure, 25 Module, Hinged Cover Plate, 8" Deep
410 112 368	Enclosure, 25 Module, Large

If you do not see an enclosure that meets your needs, please visit vpc.com/products/enclosures for more options.

ACCESSORIES

310 113 163	Protective Cover, 9025, 9025VXI & 9025TR, Receiver
410 112 578	Protective Cover, 9025, 9025VXI & 9025TR, ITA

VXI ACCESSORIES (PLEASE SEE VXI ACCESSORIES SECTION ON PAGE 168 FOR MORE INFORMATION)

310 113 248	VXI Plug & Play Adapter Plate for 8U Chassis (also fits Racal 7U Chassis) (F)
310 113 257	VXI Plug & Play Adapter Plate for 9U Chassis
310 113 272	VXI Plug & Play Adapter Plate for Racal Instruments 9U Chassis
410 112 976	Adapter Plate, 9050 Enclosure to 9025 ITA (ITA Positioned on Lower Part of Enclosure)
510 109 117	Module Retainer Block Set For Discrete Wiring 2 Module Positions (J)
510 109 118	C-Size InterConnect Adapter, Double Slot, 4 Module Positions
510 109 150	Slot 0 Module Retainer Block Set for Discrete Wiring, 1 Module
510 109 179	C-Size InterConnect Adapter, Single Slot, 2 Module Positions, Clamp Style (I)
510 109 197	InterConnect Adapter for A or B to C Carrier (uses VME to VXI Adapter)
510 109 202	C-Size InterConnect Adapter, Single Slot (use with Part #510 109 355)
510 109 337	C-Size InterConnect Adapter, Double Slot for use with Racal 1260-100 Carrier

** For Cable Assemblies, Mating Modules, Patchcords - Visit VPC's Configurators at vpc.com/wire*

25 Module Solution • 9025 Receiver

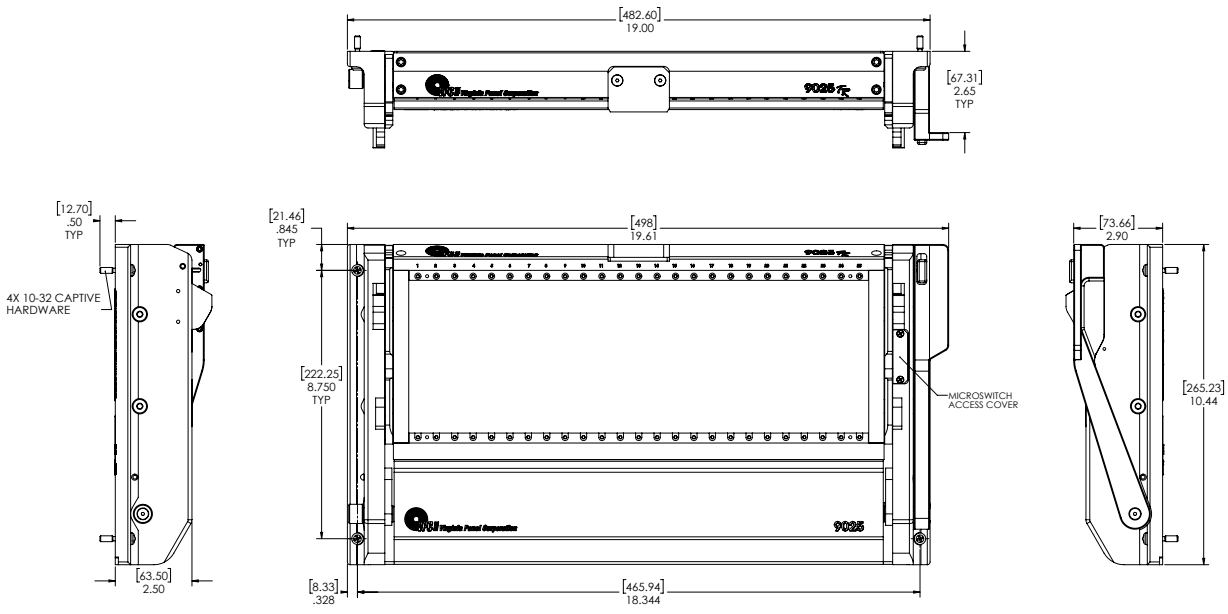

Receiver, 9025, 25 Module, Single Tier • **Part # 310 104 420**

Receiver Specifications

Weight	12.6 lbs [5.72 kg]
Frame Material	Anodized aluminum
Slide Material	Nickel plated steel
Linkage, Handle, Latch Material	Stainless steel
Available Module Slots	25 positions
Cycle Life	20,000 cycles
Temperature	–55° C to 85° C
Max. Weight Support	80 lbs @ 12" [36 kg @ 30.5 cm]
Max. Mating Force	1102 lbs [499.9 kg]

The 25 module receiver is designed to fit into a standard 19" rack. It is equipped with a locking handle to ensure your contacts are engaged. A standard integrated microswitch shuts off power when the ITA disengages from the receiver.

25 Module Solution • 9025 Receiver with Slide Mount Kit

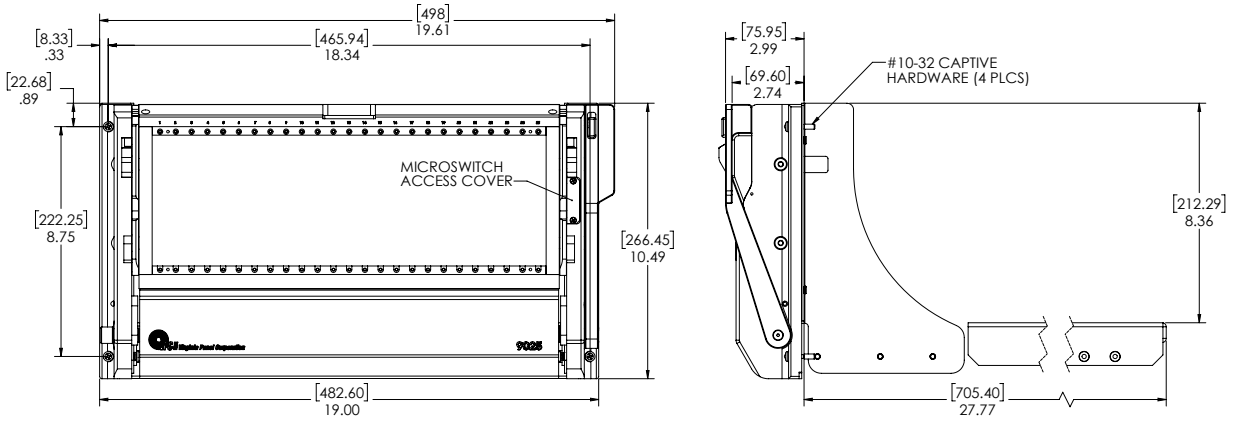

➤ Receiver, 9025, 25 Module, with Slide Mounting Kit (slide kit required) • **Part # 310 104 437**

Receiver Specifications

Weight	18.3 lbs [8.3 kg]
Frame Material	Anodized aluminum
Slide Material	Nickel plated steel
Linkage, Handle, Latch Material	Stainless steel
Mounting Flange, Instrument Bracket Material	Aluminum
Available Module Slots	25 positions
Cycle Life	20,000 cycles
Temperature	–55° C to 85° C
Max. Weight Support	80 lbs @ 12" [36 kg @ 30.5 cm]
Max. Mating Force	1102 lbs [499.9 kg]

This 9025 receiver is designed to work with a slide kit and includes a mounting bracket, flanges, and instrument bracket. A slide kit is required for use.

25 Module Solution • 9025TR Receiver with Platform

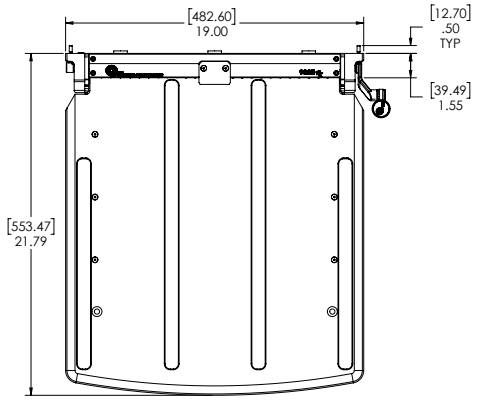

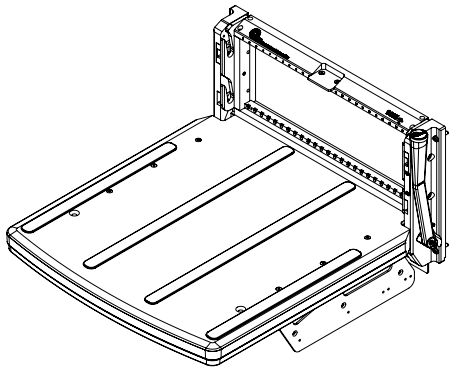

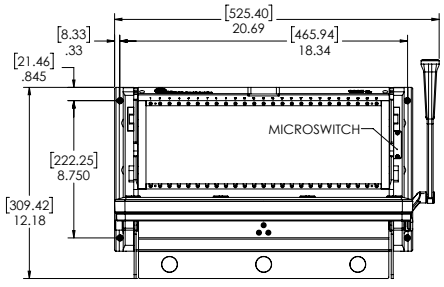

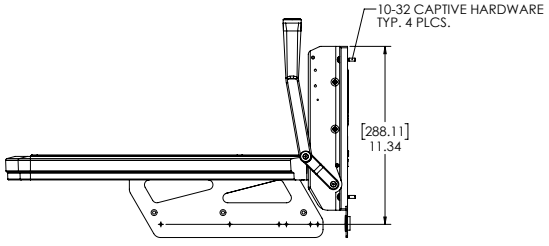

➤ Receiver, 9025TR, 25 Module, with 20" Platform (slide kit required) • **Part # 310 104 435**

Receiver Specifications

Weight	29.50 lbs [13.38 kg]
Frame Material	Anodized aluminum
Slide Material	Nickel plated steel
Linkage, Handle, Latch Material	Stainless steel
Available Module Slots	25 positions
Cycle Life	20,000 cycles
Temperature	–55° C to 85° C
Max. Mating Force	1378 lbs [625.1 kg]
Max. Weight Support	180 lbs @ 12" [81.65 kg @ 30.5 cm]

Runners along the platform provide a smooth-sliding action, ideal when using fixtures up to 180 lbs. When used in conjunction with VPC slide mounts and leg kit, the receiver can support 350 lbs. The 9025TR can be adapted to accommodate vacuum or mechanical fixturing. The 9025TR uses all standard 90 Series modules and contacts, includes a microswitch and is available with optional leg and keyboard tray kits. A slide kit is required for use.

25 Module Solution • 9025TR Receiver for Tabletop

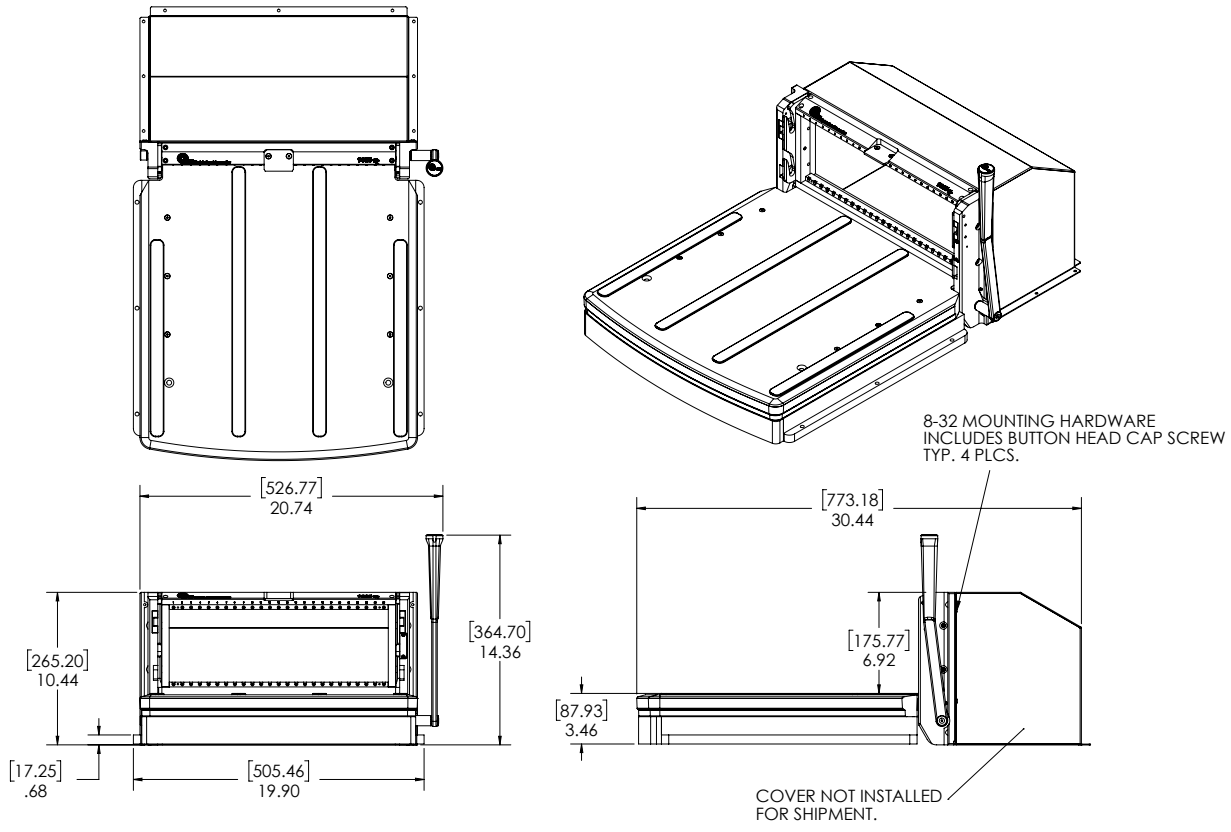

➤ Receiver, 9025TR, 25 Module, with 20" Platform, for Tabletop • **Part # 310 104 436**

Receiver Specifications

Weight	38.1 lbs [17.28 kg]
Frame Material	Anodized aluminum
Slide Material	Nickel plated steel
Linkage, Handle, Latch Material	Stainless steel
Available Module Slots	25 positions
Cycle Life	20,000 cycles
Temperature	–55° C to 85° C
Max. Mating Force	1378 lbs [625.1 kg]

The 9025TR for tabletop allows the receiver to be mounted to any horizontal surface. Four removable rubber feet enable permanent tabletop mounting configurations. Rear covers are available to protect wiring from the receiver to the test equipment.

25 Module Solution • 9025 VXI C-Size Interlocking

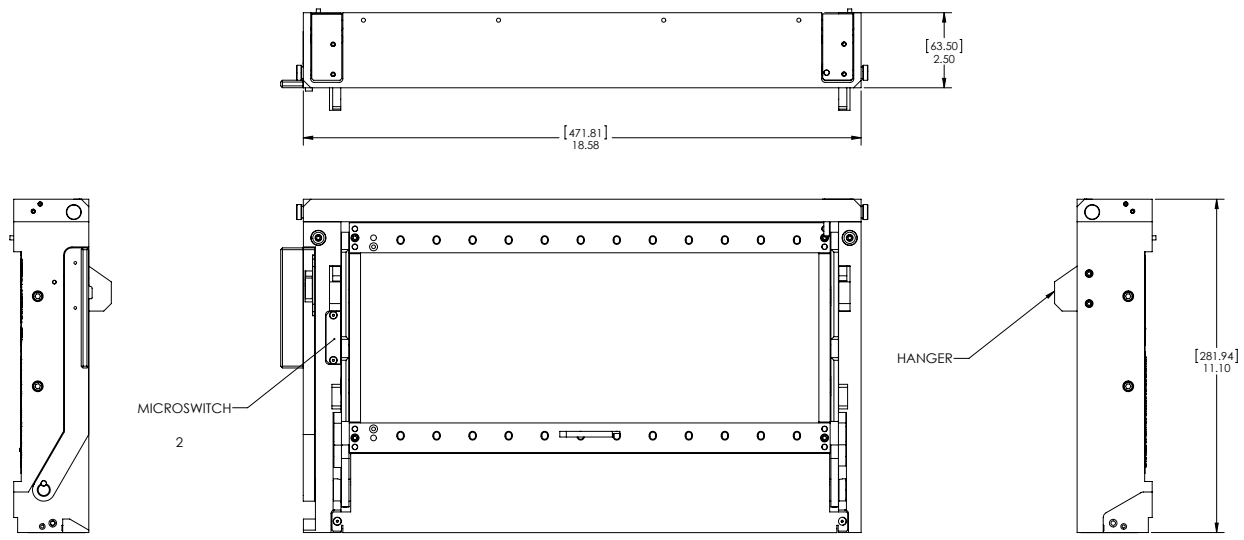

➤ Receiver, 9025, 25 Module VXI, C-Size Interlocking • **Part # 310 104 127**

Receiver Specifications

Weight	16.06 lbs [7.29 kg]
Frame Material	Anodized aluminum
Slide Material	Nickel plated steel
Linkage, Handle, Latch Material	Stainless steel
Available Module Slots	25 positions
Cycle Life	20,000 cycles
Temperature	–55° C to 85° C
Max. Mating Force	605 lbs [274.4 kg]
Max. Weight Support	80 lbs @ 12" [36 kg @ 30.5 cm]

The 25 module VXI receiver allows you to use 12 pre-wired InterConnect adapters. It also hinges down for direct access to the instruments. It is equipped with a locking handle to ensure your contacts are engaged. A standard integrated microswitch shuts off power when the ITA disengages from the receiver.

25 Module Solution • 9025 ITA

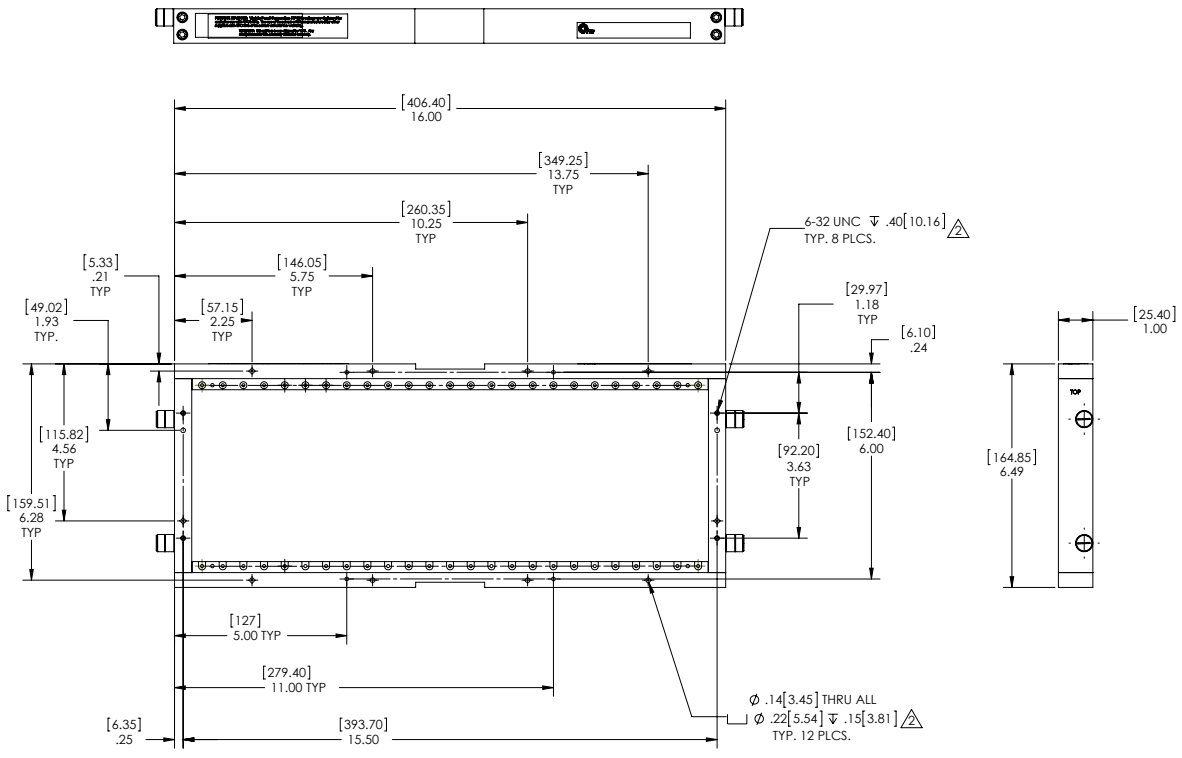

➤ ITA, 9025, 25 Module, Single Tier • **Part # 410 104 111**

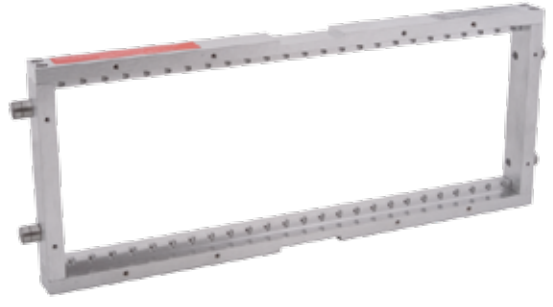

ITA Specifications

Weight	2.6 lbs [1.18 kg]
Frame Material	Chromated aluminum
Available Module Slots	25 positions
Cycle Life	20,000 cycles
Temperature	–55° C to 85° C
Max. Mating Force	787 lbs [357 kg]

This ITA can accept both front and rear mount enclosures. It supports a maximum load of 787 lbs to achieve .015" total deflection. If application calls for a load that exceeds 787 lbs, please refer to our 1.5" thick 9025 ITA Part # 410 104 505.

25 Module Solution • 25 Module Enclosures

Enclosures for 25 module ITAs are made of aluminum and painted black. The top of the enclosure has a hinged cover plate with ¼ turn hardware that provides easy access to the ITA's wiring when required. The 9025 ITA can accept both front and rear mount enclosures.

All cover plates are black anodized. Screws for mounting the enclosures to the ITA are included. Handles are provided for easy removal of the ITA from the receiver.

Visit **vpc.com/enclosures** for more enclosure options.

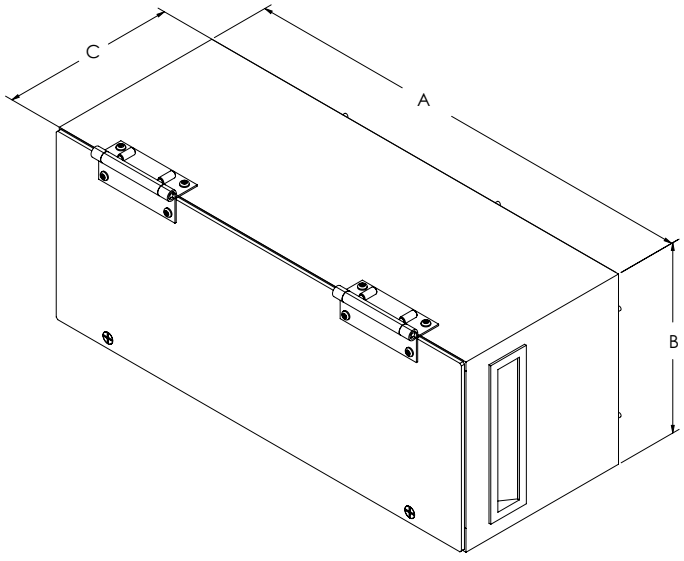

Part #	Description	A	B	C
410 112 198	Enclosure, 25 Module, Hinged Cover Plate, 4" Deep	16.00 [406.4]	6.48 [164.6]	4.00 [101.6]
410 112 336	Enclosure, 50 Module, 50 Module 4" Adapter for 25 Module, Hinged Cover	16.00 [406.4]	12.46 [316.48]	4.12 [104.648]
410 112 273	Enclosure, 25 Module, Hinged Cover Plate, 8" Deep	16.00 [406.4]	6.48 [164.6]	8.00 [203.2]
410 112 823	Enclosure, 25 Module, Hinged Cover Plate, 15" Deep	16.00 [406.4]	7.35 [186.69]	14.97 [380.28]
410 112 368	Enclosure, 25 Module, Large			
410 114 103	Enclosure, 25 Module, Front Mount, Sloped, for 9025TR, w/G10 Cover			

9025 • Accessories

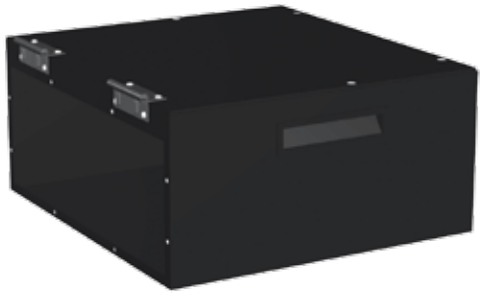

Made of aluminum, the enclosure body is painted black and features a hinged cover plate with ¼ turn hardware that provides easy access to the ITA wiring. The enclosure is secured to the ITA by 12 #4 socket head cap screws.

➤ Enclosure, 25 Module, Hinged Cover Plate, 15" Deep • **Part # 410 112 823**

The rack extender kit is used for mounting to racks with mounting rails recessed more than 1". It is made of aluminum with a black anodized finish.

➤ Rack Extender Kit, 9025TR, 1.5" Deep **Part # 310 113 494**

This 25 module enclosure is made of powder coated aluminum. The top of the enclosure has a G10 hinged cover plate with ¼-turn hardware that provides easy access to the ITA wiring when required.

➤ Enclosure, 25 Module, Front Module, Sloped, for 9025TR, with G10 Cover • **Part # 410 114 103**

This 25 module enclosure is made of powder coated aluminum. The top of the enclosure has a hinged cover plate with ¼-turn hardware that provides easy access to the ITA wiring when required.

➤ Enclosure, 25 Module, Front Mount, Sloped, for 9025TR • **Part # 410 114 004**

The aluminum receiver protective cover protects contacts and modules when the ITA is not in use.

➤ Protective Cover, 9025, 9025VXI & 9025TR, Receiver • **Part # 310 113 163**

The aluminum ITA protective cover protects contacts and modules when the ITA is not in use.

➤ Protective Cover, 9025, 9025VXI & 9025TR, ITA **Part # 410 112 578**

50 Module Solution • 9050

The rack mountable 9050 receiver is designed to accept the 9025 and 9050 ITAs and is essential to support advanced Mass InterConnect requirements. The VXI receiver is designed for use with our pre-wired InterConnect adapters on the top tier and discrete wiring modules on the bottom tier. The receiver hinges down to give the user access to the instruments in the rack. The 50 module VXI and discrete-wiring receiver is available in rack mount, slide mount, and platform slide mount versions. The slide and rack mount options can accept two 9025 ITAs in addition to the standard 50 module ITA. The 50 module solution can be adapted to accommodate vacuum or mechanical fixturing. Connector modules can also be intermixed to establish custom interfaces, which are ideal for functional and system testing applications.

Features and Benefits

- Precision engineered engagement mechanism
- Standard ITA frame accommodates multiple enclosure types for a variety of fixture options
- Modular and reconfigurable for evolving test requirements
- Reliable connectivity beyond 20,000 cycles
- Quick and easy integration and maintenance
- Wide range of I/O options including signal, coaxial, power, pneumatic, vacuum, thermocouple, fiber optic, and PCB solutions
- Designed to fit a standard 19" rack
- An integrated microswitch that shuts power off when the ITA disengages
- VXI receivers incorporate a left-side handle on a telescoping shaft for use with enclosures larger than the ITA
- VXI Plug & Play kit allows the VXI receiver to hinge down offering easy access to interconnect adapters and VXI test instrumentation
- Mounting options include: rack mount, slide mount, and platform slide mount

Avionics Circuit Card Tester with 9050 VXI

9050 Rack Mount VXI Configuration

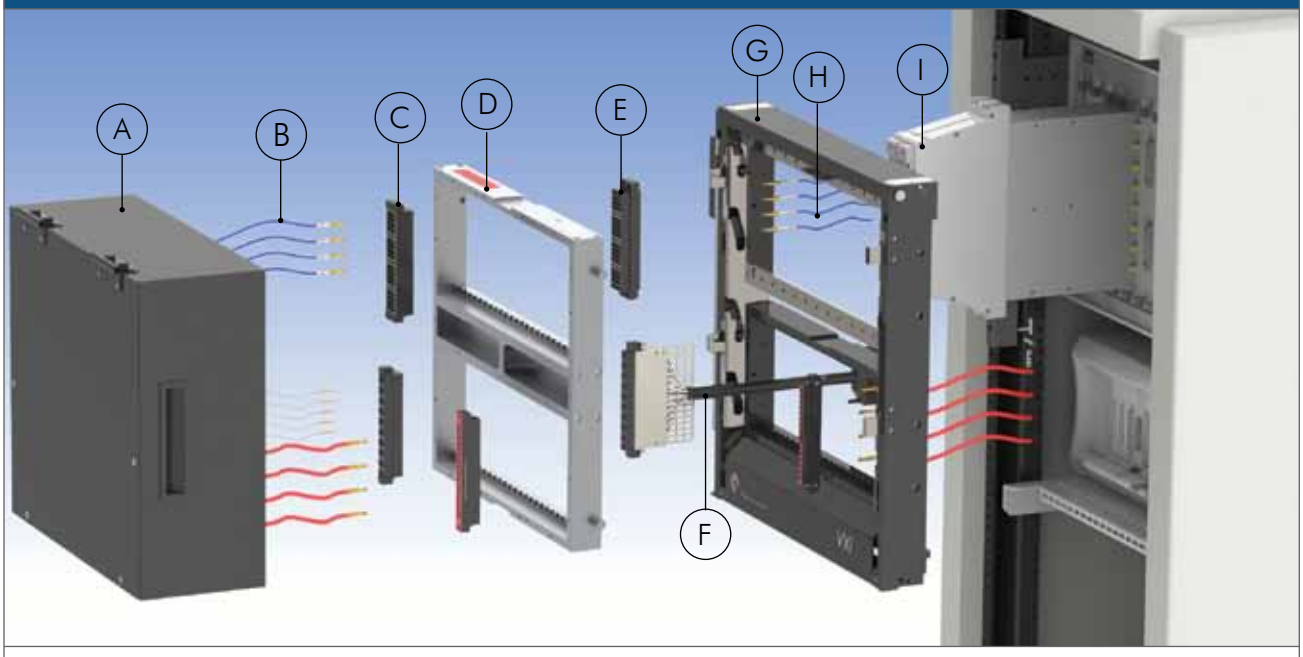

A. ITA Enclosure
B. ITA Patchcords
C. ITA Module
D. 9050 ITA
E. Receiver Module
F. Receiver Cable Assembly*
G. 9050 Receiver
H. Receiver Patchcords
I. InterConnect Adapter

Part #	Description	*Visit VPC.com for full product details*

RECEIVER

310 104 248	Receiver, 9050, 50 Module, VXI and Discrete Wiring, Double Tier** (G)

ITAS

410 104 538	ITA, 9050, 50 Module, VXI and Discrete Wiring, Double Tier (D)
410 104 111	ITA, 9025, 25 Module, Single Tier

ENCLOSURES

410 112 375	Enclosure, 50 Module, Hinged Cover Plate, 8" Deep
410 112 463	Enclosure, 50 Module, Hinged Cover Plate, 6" Deep
410 112 519	Enclosure, 50 Module, Hinged Cover Plate, 12" Deep (A)
410 112 770	Enclosure, 50 Module, L-Shaped

If you do not see an enclosure that meets your needs, please visit vpc.com/products/enclosures for more options.

ACCESSORIES

310 113 285	Protective Cover, 9050, VXI and Discrete Wiring, Receiver
410 112 579	Protective Cover, 9050, ITA
410 112 578	Protective Cover, 9025, 9025VXI & 9025TR, ITA
410 112 582	Protective Cover, 9050, VXI and Discrete Wiring, ITA

VXI ACCESSORIES (PLEASE SEE VXI ACCESSORIES SECTION ON PAGE 168 FOR MORE INFORMATION)

310 113 299	Adapter Kit for Keysight Technologies C- Size VXI E8400 used with Double Tier Receiver
310 113 303	Adapter Kit for Tektronix VX1410A, VX1401A and VX1420A used with Double Tier Receiver
310 113 364	VXI Plug & Play Plate, 14U (for Part # 310 104 248)
510 109 117	Module Retainer Block Set For Discrete Wiring 2 Module Positions
510 109 150	Slot 0 Module Retainer Block Set for Discrete Wiring, 1 Module
510 109 179	C-Size InterConnect Adapter, Single Slot, 2 Module Positions, Clamp Style (I)
510 109 118	C-Size InterConnect Adapter, Double Slot, 4 Module Positions
510 109 337	C-Size InterConnect Adapter, Double Slot for use with Racal 1260-100 Carrier

** For Cable Assemblies, Mating Modules, Patchcords - Visit VPC's Configurators at vpc.com/wire*

*** With a typical contact load, approximately 35 lbs force is needed to engage the receiver handle. Consult VPC for increased contact load applications.*

9050 Slide Configuration

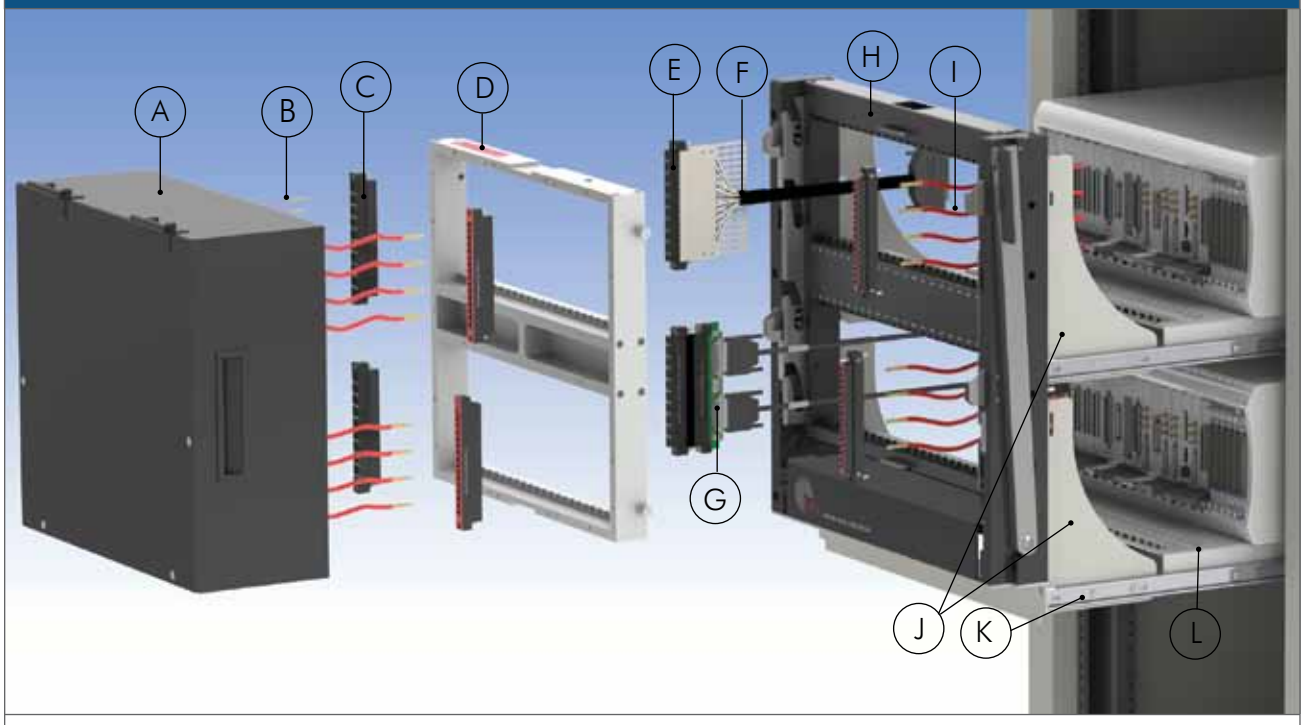

A. ITA Enclosure	E. Receiver Module	I. Receiver Patchcords
B. ITA Patchcords	F. Cable Assembly*	J. Mounting Flanges
C. ITA Module	G. PCB Adapter	K. Slide Kit
D. 9050 ITA	H. 9050 Receiver	L. Instrument Bracket

Part #	Description	*Visit VPC.com for full product details*

RECEIVERS

310 104 402	Receiver, 9050, 50 Module, with Slide Mounting Kit (slide kit required)** (H)(I)(J)
310 104 429	Receiver, 9050, 50 Module, Dual Discrete Wiring Tiers, EMI Gasket

ITAS

410 104 538	ITA, 9050, 50 Module, VXI and Discrete Wiring, Double Tier (D)
410 104 580	ITA, 9050, 50 Module, Double Tier, EMI, with 8" Enclosure
410 104 111	ITA, 9025, 25 Module, Single Tier

ENCLOSURES (A)

410 112 198	Enclosure, 25 Module, Hinged Cover Plate, 4" Deep
410 112 336	Enclosure, 50 Module, 50 Module 4" Adapter for 25 Module, Hinged Cover
410 112 375	Enclosure, 50 Module, Hinged Cover Plate, 8" Deep
410 112 368	Enclosure, 25 Module, Large
410 112 463	Enclosure, 50 Module, Hinged Cover Plate, 6" Deep
410 112 519	Enclosure, 50 Module, Hinged Cover Plate, 12" Deep
410 112 770	Enclosure, 50 Module, L-Shaped

NOTE: The 25 module enclosures only work with the 25 module ITA
If you do not see an enclosure that meets your needs, please visit vpc.com/products/enclosures for more options.

SLIDE KITS (K)

310 113 451	28" Slide Kit, Fits 26"–30" Deep Racks, Supports 180 lbs.
310 113 411	30" Slide Kit, Fits 28"–32" Deep Racks, Supports 180 lbs.
310 113 500	36" Slide Kit, Fits 34"–38" Deep Racks, Supports 180 lbs.

ACCESSORIES

310 113 285	Protective Cover, 9050, VXI and Discrete Wiring, Receiver
410 112 578	Protective Cover, 9025, 9025VXI & 9025TR, ITA
410 112 582	Protective Cover, 9050, VXI and Discrete Wiring, ITA

**For Cable Assemblies, Mating Modules, Patchcords - Visit VPC's Configurators at vpc.com/wire*

*** With a typical contact load, approximately 35 lbs force is needed to engage the receiver handle. Consult VPC for increased contact load applications.*

9050TR Platform Configuration

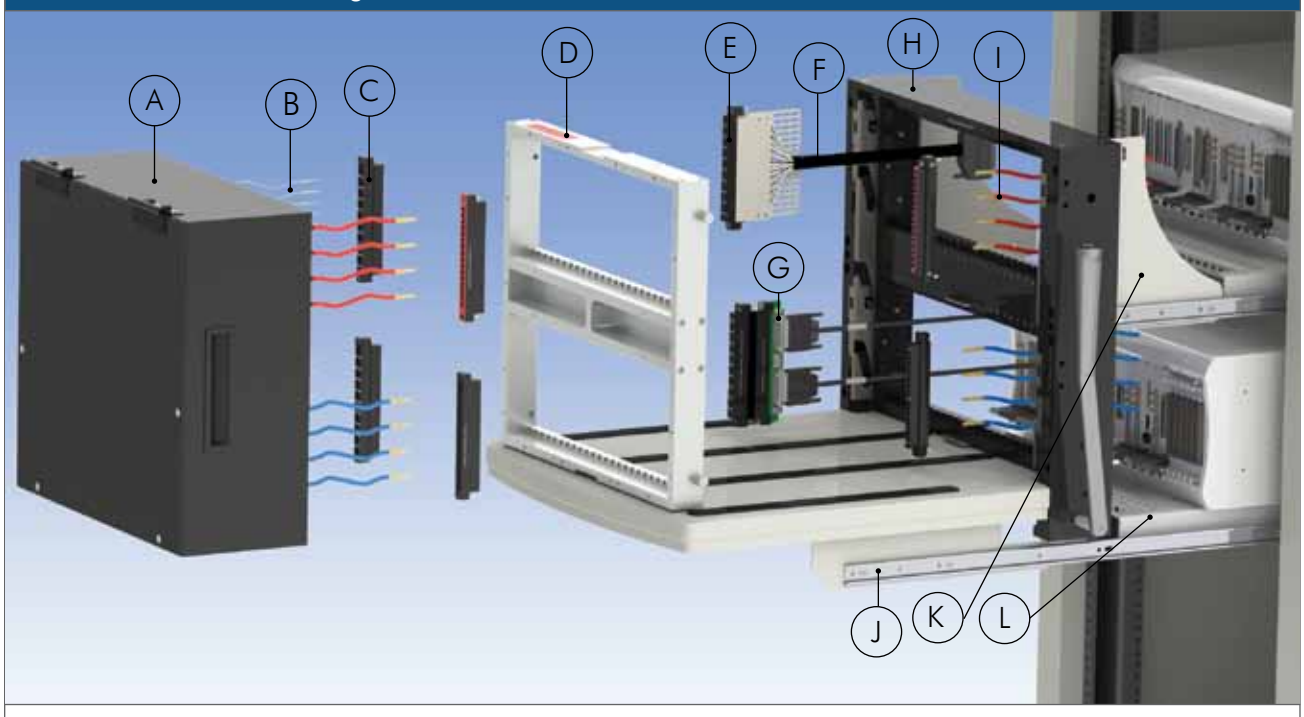

A. ITA Enclosure
B. ITA Patchcords
C. ITA Module
D. 9050 ITA
E. Receiver Module
F. Cable Assembly*
G. PCB Adapter
H. 9050TR Receiver with 20" Platform
I. Receiver Patchcords
J. Slide Kit
K. Mounting Flange
L. Instrument Bracket

Part #	Description	*Visit VPC.com for full product details*

RECEIVER

310 104 369	Receiver, 9050TR, 50 Module, with 20" Platform (slide kit required)** (G)(K)(L)(H)

ITAS

410 104 538	ITA, 9050, 50 Module, VXI and Discrete Wiring, Double Tier (D)
410 104 111	ITA, 9025, 25 Module, Single Tier

ENCLOSURES (A)

410 112 198	Enclosure, 25 Module, Hinged Cover Plate, 4" Deep
410 112 375	Enclosure, 50 Module, Hinged Cover Plate, 8" Deep
410 112 368	Enclosure, 25 Module, Large
410 112 463	Enclosure, 50 Module, Hinged Cover Plate, 6" Deep
410 112 519	Enclosure, 50 Module, Hinged Cover Plate, 12" Deep
410 112 770	Enclosure, 50 Module, L-Shaped
410 112 823	Enclosure, 25 Module, Hinged Cover Plate

If you do not see an enclosure that meets your needs, please visit vpc.com/products/enclosures for more options.

SLIDE KITS (J)

310 113 451	28" Slide Kit, Fits 26"–30" Deep Racks, Supports 180 lbs.
310 113 411	30" Slide Kit, Fits 28"–32" Deep Racks, Supports 180 lbs.
310 113 500	36" Slide Kit, Fits 34"–38" Deep Racks, Supports 180 lbs.

ACCESSORIES

310 113 285	Protective Cover, 9050, VXI and Discrete Wiring, Receiver
410 112 578	Protective Cover, 9025, 9025VXI & 9025TR, ITA
410 112 582	Protective Cover, 9050, VXI and Discrete Wiring, ITA
310 113 439	Keyboard Tray Kit, Slide Configuration, Keyboard with Touchpad Mouse Included
310 113 566	Adjustable Leg Kit for the 20" Platform, 27"-36", Supports 350 lbs.

**For Cable Assemblies, Mating Modules, Patchcords - Visit VPC's Configurators at vpc.com/wire*

*** With a typical contact load, approximately 35 lbs force is needed to engage the receiver handle. Consult VPC for increased contact load applications.*

50 Module Solution • 9050 VXI and Discrete Wiring

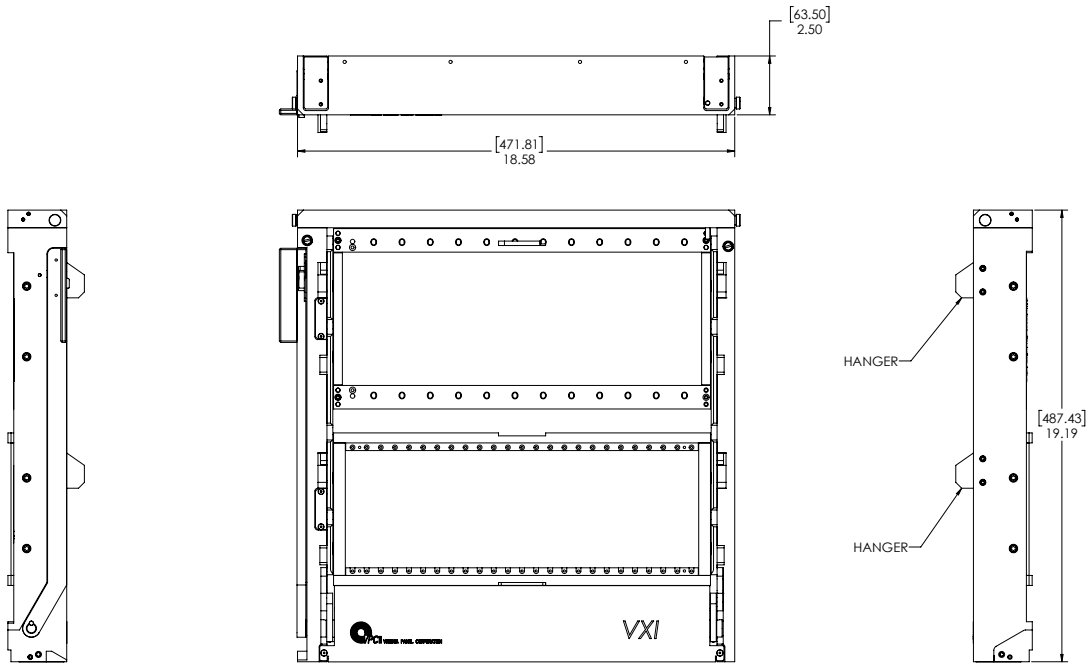

➤ Receiver, 9050, 50 Module, VXI and Discrete Wiring, Double Tier • **Part # 310 104 248**

Receiver Specifications

Weight	25 lbs [11.34 kg]
Frame Material	Anodized aluminum
Slide Material	Nickel plated steel
Linkage, Handle, Latch Material	Stainless steel
Available Module Slots	50 psitions
Cycle Life	20,000 cycles
Temperature	–55° C to 85° C
Max. Mating Force	1331 lbs [603.7 kg]
Max. Weight Support	80 lbs @ 12" [36 kg @ 30.5 cm]

The 9050 VXI receiver's op tier accommodates VXI instruments and accepts our InterConnect adapters. The bottom tier is for discrete wiring.

50 Module Solution • 9050 Dual Discrete Wiring

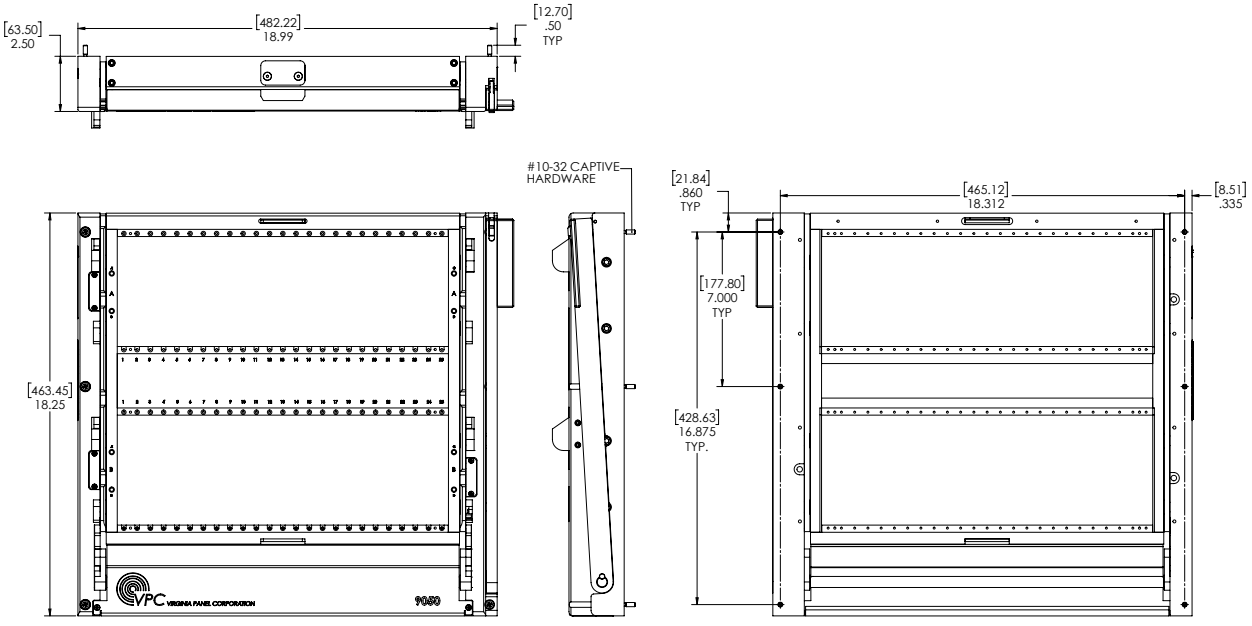

➤ Receiver, 9050, 50 Module, Dual Discrete Wiring Tiers • **Part # 310 104 368**

Receiver Specifications

Weight	30.4 lbs [13.79 kg]
Frame Material	Anodized aluminum
Slide Material	Nickel plated steel
Linkage, Handle, Latch Material	Stainless steel
Available Module Slots	50 positions
Cycle Life	20,000 cycles
Temperature	–55° C to 85° C
Max. Mating Force	1870 lbs [848.2 kg]
Max. Weight Support	80 lbs @ 12" [36 kg @ 30.5 cm]

The 9050 receiver is a rugged system devised to accommodate high I/O. With high contact point availability, the 50 module receiver is suited for larger test and measurement systems. Both tiers are designed for discrete wiring, and can accommodate individual 9025 ITAs.

50 Module Solution • 9050 Receiver for Slide Mount

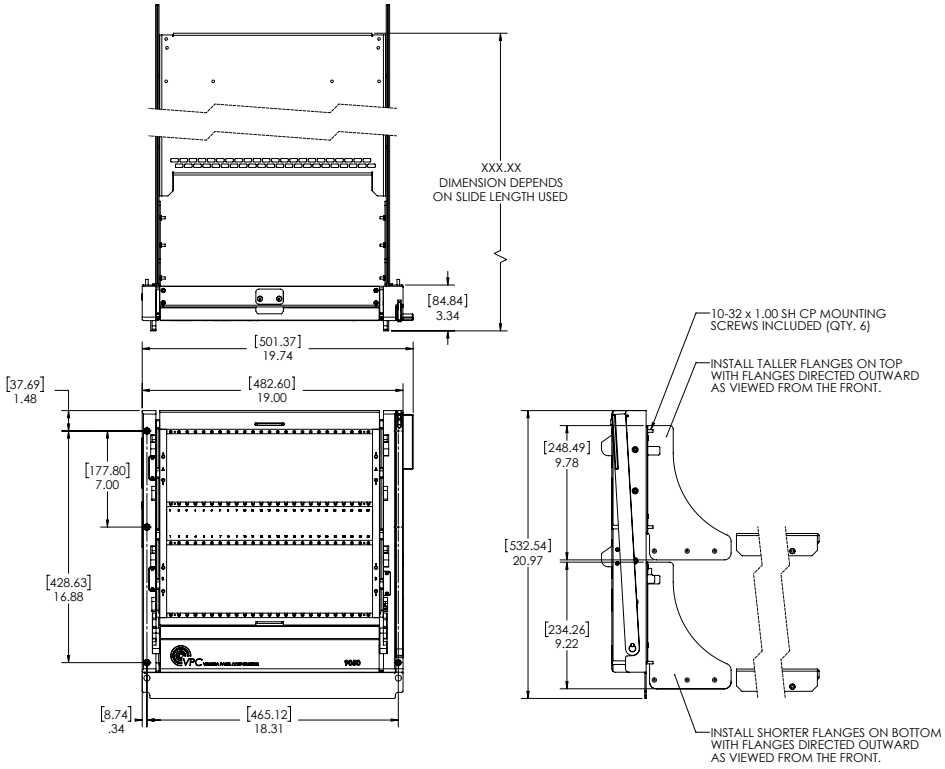

➤ Receiver, 9050, 50 Module, with Slide Mounting Kit (slide kit required) • **Part # 310 104 402**

Receiver Specifications

Weight	41.7 lbs [18.9 kg]
Frame Material	Anodized aluminum
Slide Material	Nickel plated steel
Linkage, Handle, Latch Material	Stainless steel
Available Module Slots	50 positions
Cycle Life	20,000 cycles
Temperature	–55° C to 85° C
Max. Mating Force	1870 lbs [848.2 kg]
Max. Weight Support	360 lbs @ 12" [163.3 kg @ 30.5 cm]

The 50 module receiver is a rugged system designed to accommodate high I/O. The 9050 with Slide Mounting Kit enables slide-out access to both chassis and instrumentation. This receiver is designed to work with a slide kit and includes a mounting bracket, flanges and instrument bracket. Two slide kits are required for use.

50 Module Solution • 9050TR Receiver for Slide Mount

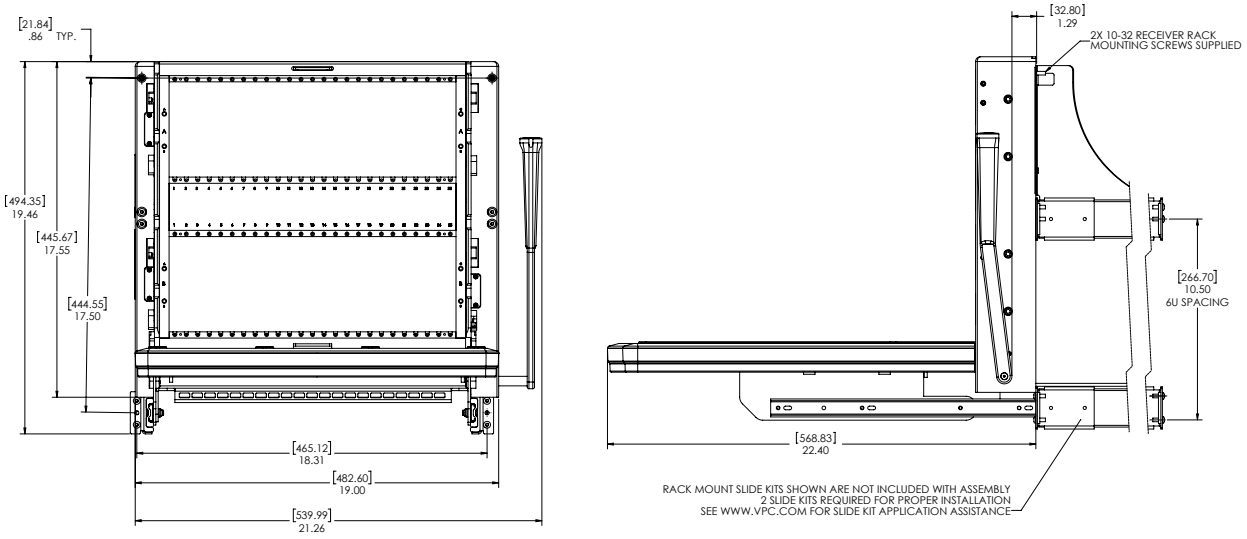

➤ Receiver, 9050TR, 50 Module, with 20" Platform (slide kit required) • **Part # 310 104 369**

Receiver Specifications

Weight	72 lbs [32.66 kg]
Frame Material	Anodized aluminum
Slide Material	Nickel plated steel
Linkage, Handle, Latch Material	Stainless steel
Available Module Slots	50 positions
Cycle Life	20,000 cycles
Temperature	–55° C to 85° C
Max. Mating Force	1654 lbs [750.2 kg]
Max. Weight Support	360 lbs @ 12" [163.3 kg @ 30.5 cm]

The 50 module platform receiver is designed to fit into a standard 19" rack. It is equipped with a locking handle to ensure your contacts are engaged. A standard integrated microswitch shuts off power when the ITA disengages from the receiver. This receiver is designed to work with a slide kit and includes mounting flanges and instrument bracket, Part # 310 113 507. Two slide kits are required for use.

50 Module Solution • 9050 VXI ITA

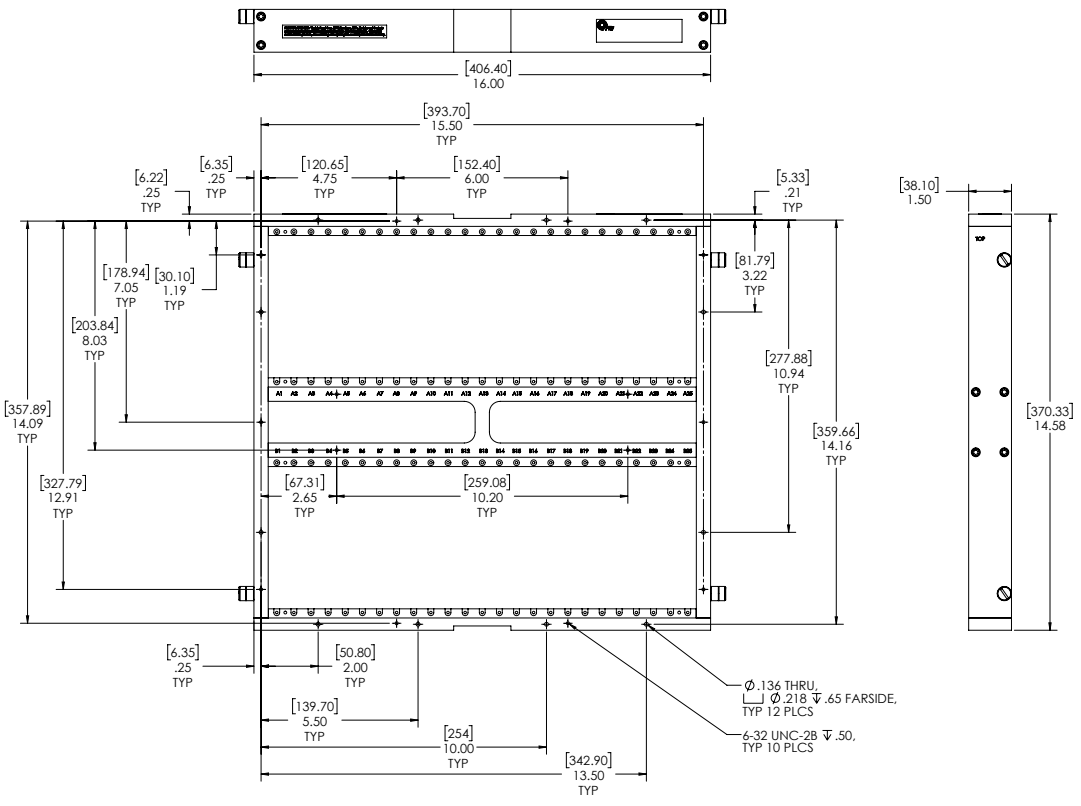

ITA, 9050, 50 Module, VXI and Discrete Wiring, Double Tier • **Part # 410 104 538**

ITA Specifications

Weight	8.25 lbs [3.74 kg]
Frame Material	Chromated aluminum
Available Module Slots	50 positions
Cycle Life	20,000 cycles
Max. Mating Force	2133 lbs [967.5 kg]
Temperature	–55° C to 85° C

The 50 module ITA can be used in a number of applications to accomplish the required connection to the unit under test (UUT). You can mount a VPC front or rear mount enclosure or customize your own fixture to be attached to the ITA frame. A wide range of ITA modules are available separately for user configuration.

50 Module Solution • Accessories

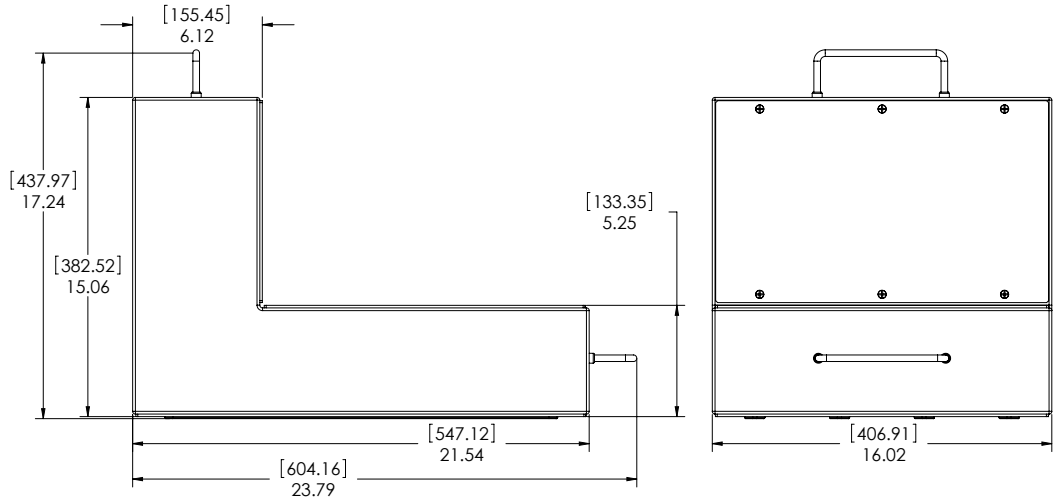

The L-Shaped Enclosure provides significant area for external I/O devices. The three access panels (front, top, and bottom) are removable covers with ¼ turn fasteners. With the use of adapter plates, it can be used with 9050 and 9025 ITAs.

➤ Enclosure, 50 Module, L-Shaped • **Part # 410 112 770**

When the receiver is not in use, the protective cover is used to protect the modules and contacts. The protective cover is made up of black anodized aluminum.

➤ Protective Cover, 9050, VXI and Discrete Wiring Receiver • **Part # 310 113 285**

The aluminum ITA protective cover protects contacts and modules when the ITA is not in use.

➤ Protective Cover, 9050, VXI and Discrete Wiring, ITA • **Part # 410 112 582**

50 Module Solution • 50 Module Enclosures

Enclosures for 50 module ITA are made of aluminum and painted black. The top of the enclosure has a hinged cover plate with ¼ turn hardware that provides easy access to the ITAs wiring when required. The 9050 ITA can accept both front and rear mount enclosures.

All cover plates are black anodized. Screws for mounting the enclosures to the ITA are included. Handles are provided for easy removal of the TPS hardware from the receiver, except where noted.

Visit **vpc.com/enclosures** for more options.

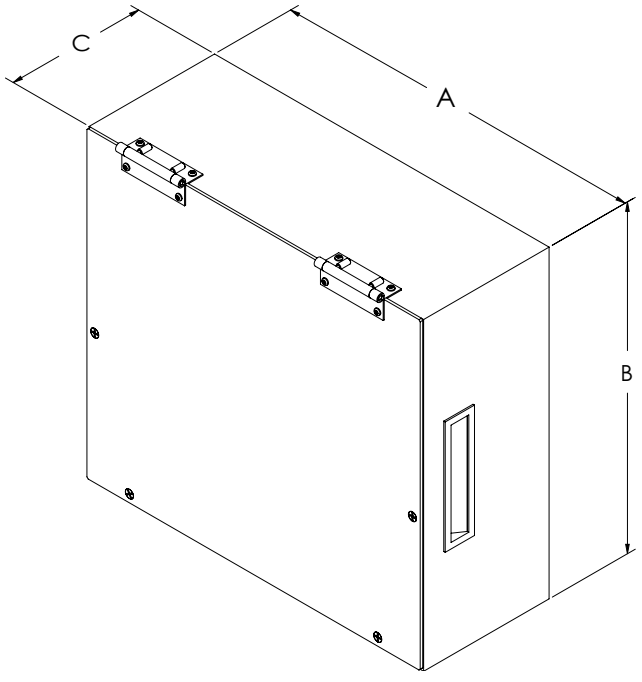

Part #	Description	A	B	C
410 112 463	Enclosure, 50 Module, Hinged Cover Plate, 6" Deep	16.00 [406.4]	14.57 [370.1]	6.12 [155.45]
410 112 519	Enclosure, 50 Module, Hinged Cover Plate, 12" Deep	16.00 [406.4]	14.57 [370.1]	12.00 [208.8]

25 and 50 Module Solutions • Enclosures

Front Mount ITA to Standard Enclosure

Standard Enclosures

VPC offers a variety of standard enclosures for discrete-wiring needs. Our enclosures range from the low I/O ITAs such as the G2 and G6 to the high I/O systems such as the 9050. For several of our receiver systems, we offer multiple standard enclosures to meet varying test requirements. The larger enclosures come with standard hinged cover plates to enable easy access to wiring.

Visit **vpc.com/enclosures** for a list of our standard enclosures.

Custom Enclosures

VPC's highly reliable ITAs mount directly to an enclosure to house your test fixturing. This enclosure can be customized to fit your application requirements. VPC offers custom cut-outs for accommodating your secondary connectors and custom silk screening and engraving to guarantee quick and fail-safe identification of your test lines. Hinged or removable covers can be added to any side of your enclosure to provide quick and easy access.

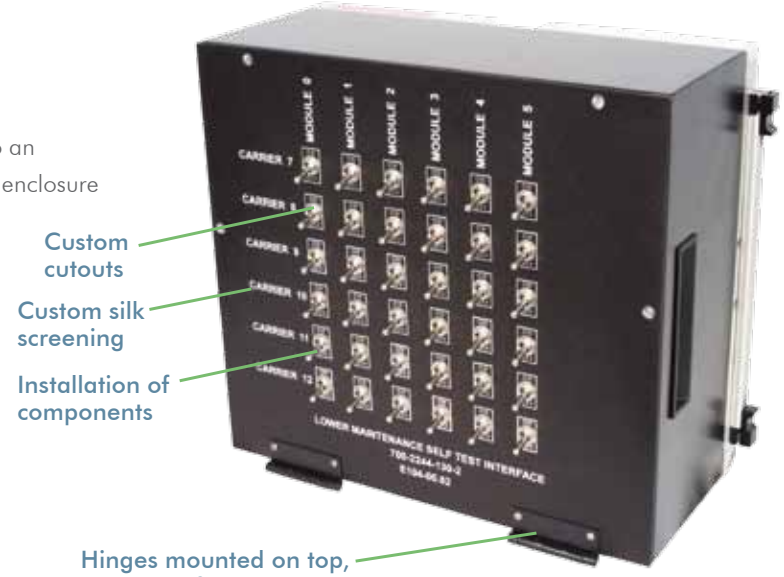

Standard Enclosure with Custom Cutouts

Custom Enclosure with Custom Cutouts

Different manufacturing methods are available for creating your quality enclosure. VPC offers enclosures in both deep drawn and sheet metal sides that can be welded together. We can manufacture your enclosure with removable side panels and mounting hardware. We can also wire the enclosure to your specifications.

Many enclosure accessories are available, such as protective covers that prevent damage to your pins, and adapter plates for making your solution scalable.

vpc.com/enclosures

VXI Plug & Play Adapter Plates and Flange Kits

VXI receivers must be mounted to the VXI instrument chassis. There are two methods to accomplish this. The first method is to take advantage of the VXI Plug & Play standard that was established to ensure interoperability between multiple vendors in both software and hardware. If the chassis meets the VXI Plug & Play standard, and you are planning to use the 9025 VXI receiver (Part # 310 104 127), then the user should purchase the receiver mounting flanges as an accessory from the chassis manufacturer. These, used in combination with a VPC VXI Plug & Play plate, will allow the user to mount the 9025 VXI receiver to the chassis without any special tools or alignment requirements. VPC offers three VXI Plug & Play plates to choose from depending on the U height (1U = 1.75") of the chassis.

If you are planning to use the 9050 VXI receiver (Part # 310 104 248), then the second method must be employed. This involves using flanges manufactured by VPC in order to mount the larger 9050 VXI receiver to the VXI chassis. In this case, the flanges must be selected to match the particular chassis that is being used, and they must be aligned to the receiver and chassis during assembly. In order to accomplish the alignment required, the user can use two VPC pre-wired InterConnect adapters. If using the pre-wired InterConnect adapters, it should be noted that you must mount to a VXI Instrument in order to achieve proper alignment (visit vpc.com for User's Manual instructions).

Part #	Description
310 113 299	Adapter Kit for Keysight Technologies C- Size VXI E8400 used with Double Tier Receiver
310 113 303	Adapter Kit for Tektronix VX1410A, VX1401A and VX1420A used with Double Tier Receiver
NOTE: *VXI Plug & Play Flanges for the following must be purchased from the chassis manufacturer.*	
310 113 248	VXI Plug & Play Adapter Plate for 8U Chassis (will also fit Racal Instruments 7U chassis)
310 113 257	VXI Plug & Play Adapter Plate for 9U Chassis
310 113 272	VXI Plug & Play Adapter Plate for Racal Instruments 9U Chassis

Wiring Module Retainer Blocks

Module retainer blocks are used to attach modules directly to the inner frame of the VXI receiver for discrete wiring. These modules then hinge down with the receiver, providing easy access to the wiring.

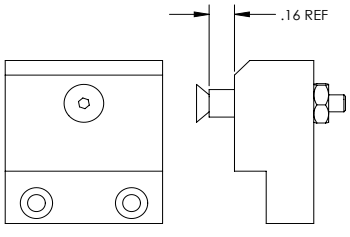

Part # 510 109 117

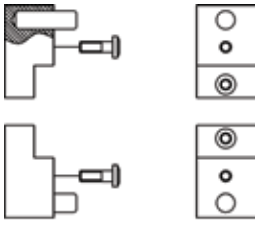

Part # 510 109 150

Part #	Description
510 109 117	Module Retainer Block Set For Discrete Wiring 2 Module Positions
510 109 150	Slot 0 Module Retainer Block Set For Discrete Wiring 1 Module

InterConnect Adapter For VXI Cards

InterConnect adapters are available to funnel the wiring to a VXI chassis. Connector cover plates are optional replacements to the standard cover plates and allow wiring to enter or exit the funnel through different VXI instruments or receiver modules.

Part # 510 109 179

Part # 510 109 118

Part #	Description
510 109 118	C-Size InterConnect Adapter, Double Slot, 4 Module Positions
510 109 179	C-Size InterConnect Adapter, Single Slot, 2 Module Positions, Clamp Style
510 109 197	InterConnect Adapter for A or B to C Carrier (uses VME to VXI Adapter)
510 109 202	C-Size InterConnect Adapter, Single Slot (for use with Part # 510 109 355)
510 109 337	C-Size InterConnect Adapter, Double Slot for use with Racal 1260-100 Carrier
510 109 354	VTI Instruments Mounting Ear Kit for SMP 1200 Carrier (for use with Part # 510 109 118)
510 109 355	VTI Instruments Mounting Ear Kit for SMP 1100 Carrier (for use with Part # 510 109 202)
510 109 454	C-Size InterConnect Adapter, Single Slot, 2 Module Positions, Clamp Style with VXI Keying
510 109 128	Connector Cover Plate for 25 Pin, D-Shell (for Part # 510 109 118)
510 109 129	Connector Cover Plate for 50 Pin, SCSI (for Part # 510 109 118)
510 109 138	Connector Cover Plate for 50 Pin, D-Shell (for Part # 510 109 118)
510 109 139	Cable Clamp Option (Replaces Blank Cover Plate when Cabling into Adapter) (for Part # 510 109 118)
510 109 142	Connector Cover Plate for 9 Pin, D-Shell (for Part # 510 109 118)
510 109 149	Connector Cover Plate for 15 Pin, D-Shell (for Part # 510 109 118)
510 109 326	Connector Cover Plate for 25 Pin, D-Shell (for Part # 510 109 179/197)
510 109 327	Connector Cover Plate for 15 Pin, D-Shell (for Part # 510 109 179/197)
510 109 328	Connector Cover Plate for 9 Pin, D-Shell (for Part # 510 109 179/197)
510 109 329	Connector Cover Plate for 50 Pin, D-Shell (for Part # 510 109 179/197)
510 109 330	Connector Plate for BNC Connector (for Part # 510 109 179)
510 109 331	Connector Cover Plate with Cable Clamp (for Part # 510 109 179)

A special Punch Tool, Part # 910 121 137 is required to mount the InterConnect Adapter on a few VXI cards. Module Extraction Tool, Part # 910 109 111, is used to extract the VXI card and InterConnect Adapter from the mainframe is available. Consult VPC for more information.

Platform Mount Slide Kit Accessories

The keyboard tray kit with touchpad mouse connects to the computer's USB port.

- Keyboard Tray Kit • **Part # 310 113 439**

The universal edge card adapter kit's card guides are hinged and can be folded for storage by releasing the holding latches on either side of the card.

- Edge Card Adapter, Universal, For .062 PCB **Part # 111 107 138**
- Edge Card Adapter, Universal, For .093 PCB **Part # 111 107 148**

The adjustable leg kit is designed to alleviate added weight from your enclosure by giving the platform extra support. The leg kit works with all 20" platform solutions.

- Adjustable Leg Kit for the 20" Platform, 27"-36", Supports 350 lbs. • **Part # 310 113 566**

The instrument bracket works only with the platform slide configuration. It is used to mount the testing instrument to the slides. The brackets allow the test instruments to slide out for maintenance access and have a strain relief area in the front of the bracket to tie down wires and cables.

- Instrument Bracket Kit with Strain Relief, for Slide Configuration, for 28" or longer slides only • **Part # 310 113 453**

Measure rack depth between mounting rails to determine the slide mounting kit that fits the rack. A rack extender kit is available for mounting to racks with recessed rails.

- 20" Slide Kit, Fits 18"–22" deep racks, Supports 180 lbs • **Part # 310 113 409**
- 24" Slide Kit, Fits 22"–26" deep racks, Supports 180 lbs • **Part # 310 113 410**
- 28" Slide Kit, Fits 26"–30" deep racks, Supports 180 lbs • **Part # 310 113 451**
- 30" Slide Kit, Fits 28"–32" deep racks, Supports 180 lbs • **Part # 310 113 411**
- 36" Slide Kit, Fits 34"–38" deep racks, Supports 180 lbs • **Part # 310 113 500**

Accessory Kits

See Cross Reference charts for module screw sizes to determine which accessory kit contains the needed module screw.

Part #	Description	Module Used in
910 121 174	Allen Wrench Kit, Contains $^{3}/_{32}$, $^{7}/_{64}$, and $^{5}/_{32}$	
510 109 299	Module Accessory Master Kit with Allen Wrenches (contains all kits listed below)	
910 121 172	Module Accessory Kit Quantity 5, $^{3}/_{32}$ Allen Wrenches	
510 109 300*	Module Accessory Kit Quantity 39, 0-80 X .25" Screws	510 104 120/123/267/270
510 109 301	Module Accessory Kit Quantity 26, 4-40 X .375" Screws	510 104 118 510 108 104
510 109 302	Module Accessory Kit Quantity 26, 4-40 X .625" Screws	510 108 169/179 510 104 209/224 510 108 144/160 510 104 109/128/134/135 510 104 136/139/149/185 510 151 104/105/106/107/108 510 151 121/124
510 109 303	Module Accessory Kit Quantity 26, 4-40 X .56" Screws	510 104 102/120/123/150/155 510 104 267/270 510 108 101/102/111/112/115 510 108 124/125/126/131/132/138 510 108 140/148 510 108 262/263
510 109 305*	Module Accessory Kit Quantity 26, 2-56 X .187" Screws	510 104 128/133/134/135/136/139/261
510 109 306*	Module Accessory Kit Quantity 26, 2-56 X .375" Screws	510 104 139/149 510 108 148
510 109 307*	Module Accessory Kit Quantity 26, 2-56 X .25" Screws	510 104 206/243/249
510 109 359	Module Accessory Kit Quantity 26, 4-40 X .75" Screws	510 150 115/116 510 150 130/131/135/136/137 510 150 147

** These screws are used to assemble the top and bottom half of a module.*

Complete the Package
with Contacts, Modules, Patchcords and Tools.

Reconfigurable Connector Modules

- Handle various contact requirements such as digital, power, coaxial, and more
- Able to be arranged in any configuration depending on the test requirements

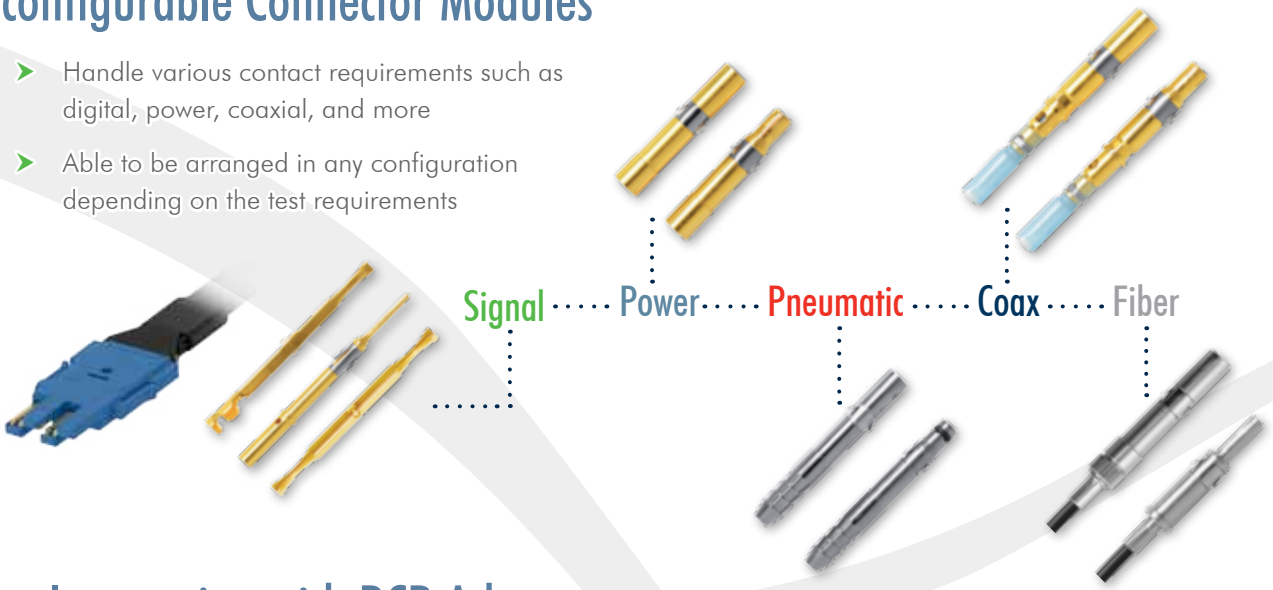

Easy Integration with PCB Adapters

- Enables ease of integration while providing wiring convenience in a cost-effective package
- Incorporates a PCB with multiple standard connectors
- Offers "plug and play" capability between module and instrumentation

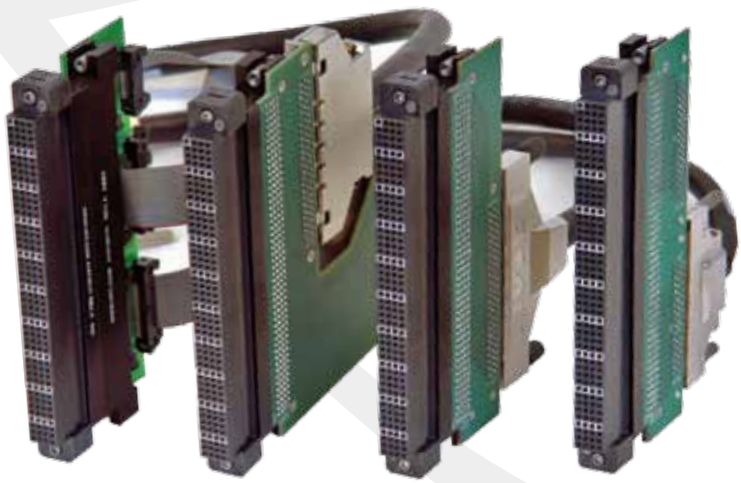

Fewer Complications with Patchcords

- Patchcords are available in various lengths to suit any application
- Cost-effective solution for your wiring needs
- Reduced setup time with pre-built patchcords

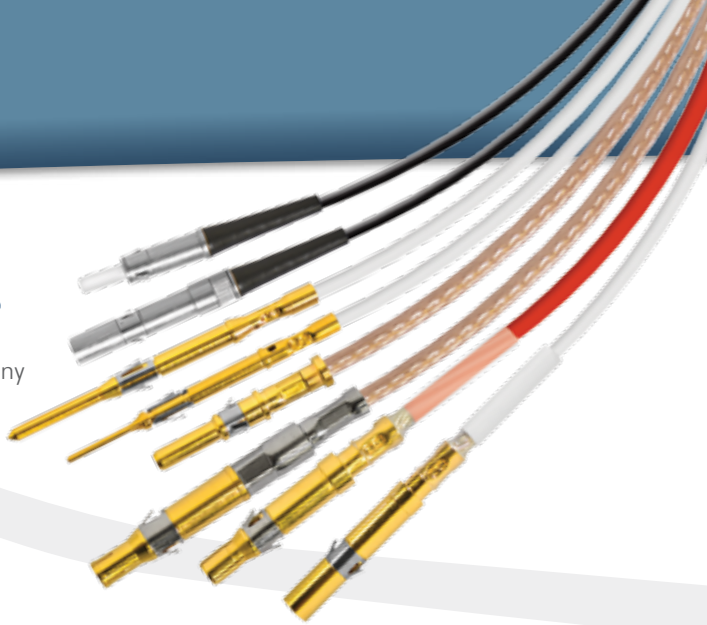

Variety of Connection Options

- Configurable for virtually any connection requirement
- Reliable connections maintain signal integrity
- Most contacts are rated to 20,000 mating cycles

Complete Tool Selection

- Crimp tools and locators are available to easily terminate contacts and wires
- Extraction tools are available to remove contacts from the module quickly when necessary, saving time
- Inspection tools are available to ensure proper function before system integration

SIM VTAC HSD Insert

Contact Specifications

Data Rate	12.5+ Gbps per differential pair
Crosstalk	30 dB min
Characteristic Impedance	100+/- 10 Ω - differential pair 50+/- 5 Ω - single ended
Operating Voltage and Current	3 amps max. continuous (350 volts max.)
Contact Resistance	40 mΩ max. per mated contact
Insulation Resistance	1000 MΩ min.
Dielectric withstanding Voltage	1050 VDC RMS min.
Mating Force	12 oz max. [340 g] per insert
Insert	Outer shell: blue LCP Male contact: alloy 7025
Contact Plating	50 μ" Au over 100 μ" Ni
Mating Cycles	20,000

Receiver/ITA Insert
Part # 610 151 103

SIM VTAC Right Angle Kit (Receiver/ITA)
Part # 610 151 106

SIM VTAC RIGHT ANGLE

The Part # 610 151 103 (image above) insert allows custom designed PCBs to have SIM VTAC HSD inserts attached. Sold in individual quantities. Compatible with Part # 610 151 104 and available in a set as Part # 610 151 106 (image to left).

Part #	Description	Used in Module
SIM VTAC HSD INSERT		
610 151 103	High Speed Insert, Receiver/ITA, SIM, 50μ", VTAC HSD, Double Ended Insert (For Use with Right Angle Only)	510 170 101/ 510 171 101 510 143 001/ 510 144 001
610 151 104	High Speed Insert, Receiver/ITA, SIM, 50μ", VTAC HSD, Right Angle Insert	510 170 101/ 510 171 101 510 143 001/ 510 144 001
610 151 105	High Speed Insert, Receiver/ITA, SIM, 50μ", VTAC HSD, Retention Insert (For Use with Right Angle only)	
610 151 106	High Speed Insert, Receiver/ITA, SIM, 50μ", VTAC HSD Kit (For Use with Right Angle Only)	510 170 101/ 510 171 101 510 143 001/ 510 144 001
EXTRACTION TOOLS		
910 112 130	Extraction Tool, SIM, Receiver and ITA	

SIM VTAC HSD Insert

Contact Specifications

Data Rate	12.5+ Gbps per differential pair
Crosstalk	30 dB min
Characteristic Impedance	100+/- 10 Ω - differential pair 50+/- 5 Ω - single ended
Operating Voltage and Current	3 amps max. continuous (350 volts max.)
Contact Resistance	40 mΩ max. per mated contact
Insulation Resistance	1000 MΩ min.
Dielectric withstanding Voltage	1050 VDC RMS min.
Mating Force	12 oz max. [340 g] per insert
Insert	Outer shell: black LCP Male contact: alloy 7025
Contact Termination	Welded
Contact Plating	50 µ" Au over 100 µ" Ni
Mating Cycles	20,000

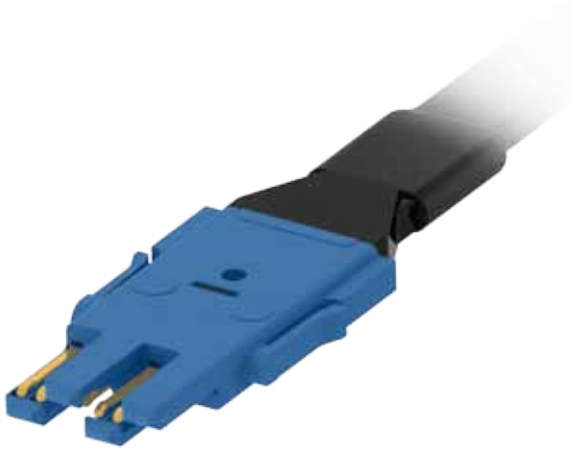

Receiver/ITA Contact

Receiver/ITA Insert • **Part # 610 151 101**

Part #	Description
SIM VTAC PATCHCORDS - RECEIVER	
7-142702731-0XX	Signal Patchcord, Receiver, SIM VTAC HSD, Rosenberger HSD Plug, 1 Position
7-142877655-036	Signal Patchcord, Receiver, SIM VTAC HSD, 36", DVI-D Male Dual Link, 5 Position
7-142890690-0XX	Signal Patchcord, Receiver, SIM VTAC HSD, USB 3.0 Type A Male, 2 Position
7-142890691-0XX	Signal Patchcord, Receiver, SIM VTAC HSD, USB 3.0 Type A Female, 2 Position
7-142890692-0XX	Signal Patchcord, Receiver, SIM VTAC HSD, USB 3.0 Type B Male, 2 Position
7-142891693-0XX	Signal Patchcord, Receiver, SIM VTAC HSD, HDMI Male, 3 Position
7-142892700-0XX	Signal Patchcord, Receiver, SIM VTAC HSD, SATA Male, 1 Position
7-142893694-0XX	Signal Patchcord, Receiver, SIM VTAC HSD, RJ45 Plug, 2 Position
7-142861000-0XX	Signal Patchcord, Receiver, SIM VTAC HSD, Twinax Flying Leads, 1 Position
7-142895000-0XX	Signal Patchcord, Receiver, SIM VTAC HSD, 24 AWG, Flying Leads, 1 Position
7-142896722-0XX	Signal Patchcord, Receiver, SIM VTAC HSD, Mini-SAS HD Plug, 4 Position
SIM VTAC PATCHCORDS - ITA	
7-141702731-0XX	Signal Patchcord, ITA, SIM VTAC HSD, Rosenberger HSD Plug, 1 Position
7-142877655-036	Signal Patchcord, Receiver, SIM VTAC HSD, 36", DVI-D Male Dual Link, 5 Position
7-141890690-0XX	Signal Patchcord, ITA, SIM VTAC HSD, USB 3.0 Type A Male, 2 Position
7-141890691-0XX	Signal Patchcord, ITA, SIM VTAC HSD, USB 3.0 Type A Female, 2 Position
7-141890692-0XX	Signal Patchcord, ITA, SIM VTAC HSD, USB 3.0 Type B Male, 2 Position
7-141891693-0XX	Signal Patchcord, ITA, SIM VTAC HSD, HDMI Male, 3 Position
7-141892700-0XX	Signal Patchcord, ITA, SIM VTAC HSD, SATA Male, 1 Position
7-141893694-0XX	Signal Patchcord, ITA, SIM VTAC HSD, RJ45 Plug, 2 Position
7-141861000-0XX	Signal Patchcord, ITA, SIM VTAC HSD, Twinax Flying Leads, 1 Position
7-141895000-0XX	Signal Patchcord, ITA, SIM VTAC HSD, 24 AWG, Flying Leads, 1 Position
7-141896722-0XX	Signal Patchcord, ITA, SIM VTAC HSD, Mini-SAS HD Plug, 4 Position

**For a complete list of SIM VTAC HSD Patchcords with vpc.com/VTAC*

11 Position SIM Module Inserts

Specifications

Material	Nickel plated zinc
Operating Temperature	-40°C to 125°C
Available Insert Positions	11
Module Positions Needed	1

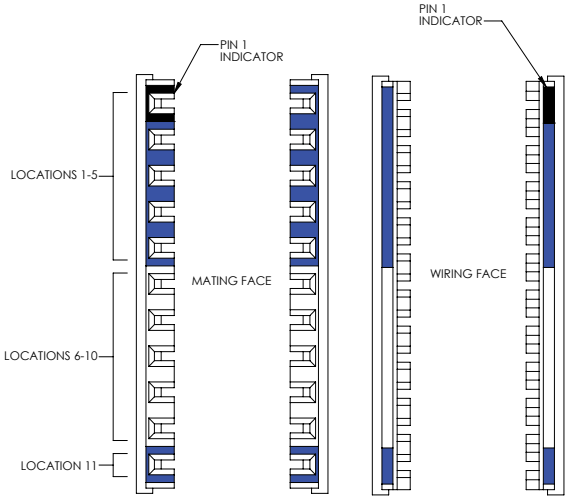

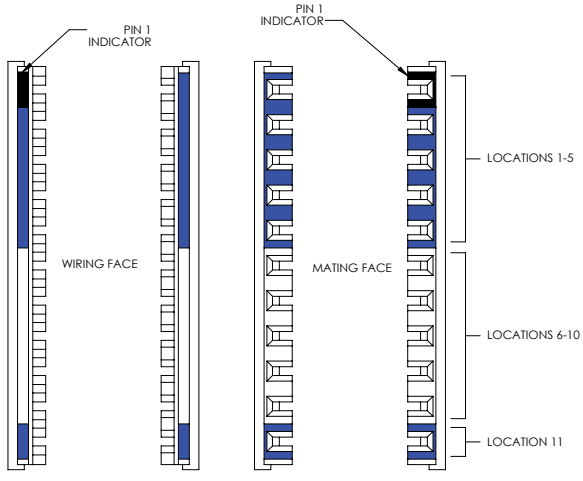

Receiver • **Part # 510 143 001** ITA • **Part # 510 144 001**

Part #	Description	Contacts Used
I2 MX RECEIVER SIM MODULE INSERT		
510 143 001	SIM Module Insert, Receiver, i2 MX, 11 Position	610 151 101 610 151 103 510 180 101
I2 MX ITA SIM MODULE INSERT		
510 144 001	SIM Module Insert, ITA, i2 MX, 11 Position	610 151 101 610 151 103 510 181 101

34 Position SIM Module Inserts

Specifications

Material	Nickel plated zinc
Operating Temperature	-40°C to 125°C
Available Insert Positions	34
Module Positions Needed	1

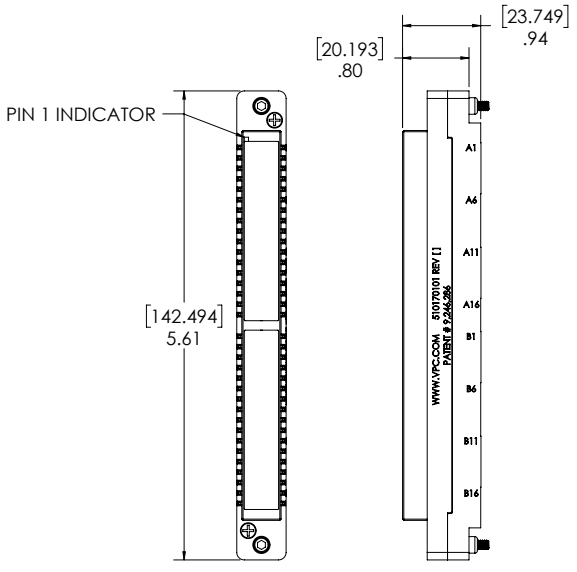

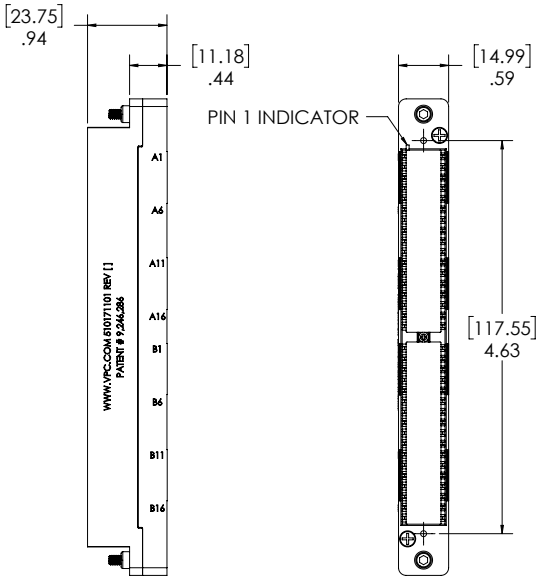

Receiver • **Part # 510 170 101** ITA • **Part # 510 171 101**

Part #	Description	Contacts Used
MODULE - RECEIVER		
510 170 101	SIM Module, Receiver, 34 Position	610 151 101 610 151 103 510 180 101
MODULE - ITA		
510 171 101	SIM Module, ITA, 34 Position	610 151 101 610 151 103 510 181 101

QuadraPaddle® Signal Contacts

Contact Specifications

Operating Current and Voltage	5 amp max. continuous; 600 volt max. use of wire Mil-W-16878/4
Contact Resistance	25 mΩ max. Measured at 50 mV @ 100 mA
Mating Force	6 oz. nominal [.15 kg]
Dielectric Withstanding Voltage (DWV)	1500 VDC min.
Insulation Resistance	5000 MΩ min.
Contact Body Material	Twin Female (RCV) – BeCu/PhBrz Crimp (RCV) – BeCu Male (ITA) – Brass
Contact Plating	Female (RCV) – 30μ" Au over 100μ" Ni Male (ITA) – 30μ" Au over 100μ" Ni
Cycle Life	20,000 cycles

Receiver Contact
Part # 610 138 216

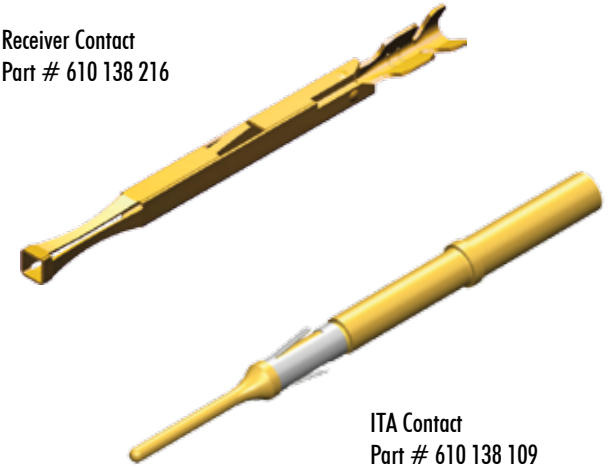

ITA Contact
Part # 610 138 109

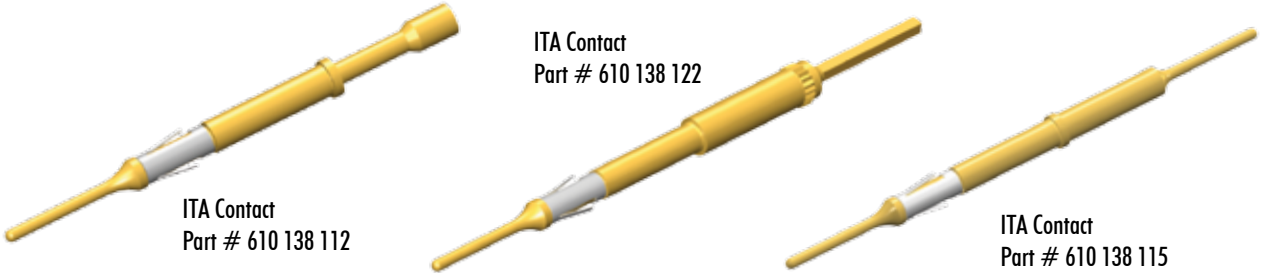

ITA Contact
Part # 610 138 112

ITA Contact
Part # 610 138 122

ITA Contact
Part # 610 138 115

QuadraPaddle Contact
28 AWG & 22 AWG
T-Rise Test

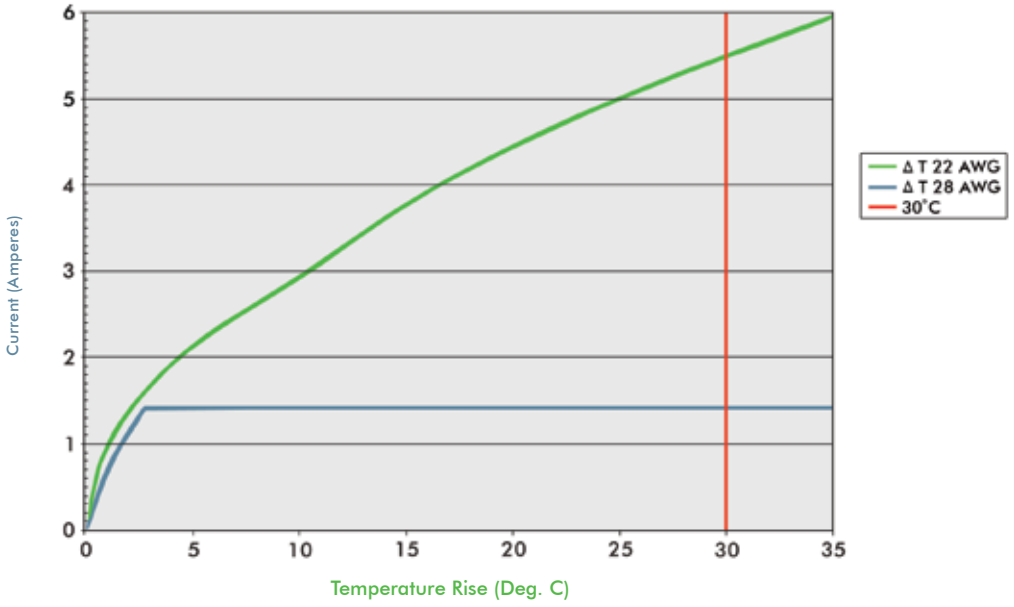

Maximum current rating for 28 AWG wire is 1.4 amperes

NOTE: For information on high speed applications with QuadraPaddle signal technology, visit vpc.com/QP

QuadraPaddle® Signal Contacts

Receiver Contact
Part # 610 138 200

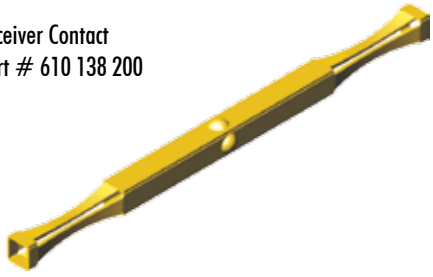

Round Post Receiver Contact
Part # 610 138 117

Square Post Receiver Contact
Part # 610 138 118

QuadraPaddle round and square post adapter pins convert QuadraPaddle twin female pins to female-male contacts

Part #	Description	Used in Module
QUADRAPADDLE RECEIVER CONTACTS		
610 138 200*	Signal Contact, Receiver, QuadraPaddle, 5 Amp, 30µ" Gold, Twin Female Replacement Contact	510 150 130/131/135 510 150 136/137/147 510 160 105/112/122
610 138 117*	Signal Contact, Receiver, QuadraPaddle, 5 Amp, Male Adapter, .025" Round Post	510 150 130/131/135/137 510 160 105/112/113
610 138 118*	Signal Contact, Receiver, QuadraPaddle, 5 Amp, Male Adapter, .025" Square Post for Wire Wrap	510 150 130/131/136/147 510 160 105/112
610 138 216	Signal Contact, Receiver, QuadraPaddle, 5 Amp, 22-28 AWG, 30µ" Gold	510 150 115/116 510 160 101/102/107
QUADRAPADDLE ITA CONTACTS		
610 138 109	Signal Contact, QuadraPaddle, ITA, 5 Amp, 22–24 AWG	510 151 105/106 510 161 101/102/107
610 138 112	Signal Contact, ITA, QuadraPaddle, 5 Amp, 26–30 AWG	510 151 105/106 510 161 101/102/107
610 138 115	Signal Contact, ITA, QuadraPaddle, 5 Amp, .025" Round Post	510 151 105/106/107/108 510 161 101/102/107
610 138 122	Signal Contact, ITA, QuadraPaddle, 5 Amp, .025" Square Post for Wire Wrap with Anti-Rotation	510 151 105/106/107/124 510 161 101/102/107

**For PCB layouts, please visit vpc.com/PCBlayouts*

Part #	Description	Used on Contact
CRIMP TOOLS		
910 101 125	Tool, Crimp, QuadraPaddle, Receiver	610 138 216
910 101 103	Tool, Crimp, QuadraPaddle ITA and TriPaddle Receiver and ITA Contacts, Locator Required	610 138 109/112 610 110 101/108/109/167/169
LOCATOR		
910 104 140	Tool, Locator, QuadraPaddle, ITA Contact	610 138 109/112
EXTRACTION TOOLS		
910 110 111	Tool, Extraction, ITA, QuadraPaddle	610 138 109/112/115/122
910 110 112	Tool, Extraction, Receiver, QuadraPaddle	610 138 216
INSERTION TOOL		
910 113 106	Tool, Insertion, QuadraPaddle ITA Wire Wrap Contact	610 138 122

QuadraPaddle® Signal Patchcords

QuadraPaddle Receiver Patchcord	QuadraPaddle ITA Patchcord

Part #	Description	Used in Module
QUADRAPADDLE RECEIVER AND ITA PATCHCORDS		
7-124 924 000-036	Signal Patchcord, Receiver, QuadraPaddle, 5 Amp, 36", 24 AWG, Single Ended	510 150 115/116 510 160 101/102/107
7-124 922 000-036	Signal Patchcord, Receiver, QuadraPaddle, 5 Amp, 36", 22 AWG, Single Ended	510 150 115/116 510 160 101/102/107
7-121 924 000-036	Signal Patchcord, ITA, QuadraPaddle, 5 Amp, 36", 24 AWG, Single Ended	510 151 105/106 510 161 101/102/107
7-121 922 000-036	Signal Patchcord, ITA, QuadraPaddle, 5 Amp, 36", 22 AWG, Single Ended	510 151 105/106 510 161 101/102/107
QUADRAPADDLE ITA JUMPERS		
7-121 924 121-006	Signal Patchcord, ITA, QuadraPaddle, 5 Amp, 6", 24 AWG, Double Ended Jumpers	510 151 105/106 510 161 101/102/107
7-121 922 121-006	Signal Patchcord, ITA, QuadraPaddle, 5 Amp, 6", 22 AWG, Double Ended Jumpers	510 151 105/106 510 161 101/102/107

QuadraPaddle Receiver Twisted Pair Patchcord	QuadraPaddle ITA Twisted Pair Patchcord

Part #	Description	Used in Module
QUADRAPADDLE RECEIVER AND ITA TWISTED PAIR PATCHCORDS		
7-124 424 000-036	Signal Patchcord, Receiver, QuadraPaddle, 36", 24 AWG Twisted Pair, Single Ended	510 150 115/116 510 160 101/102/107
7-124 422 000-036	Signal Patchcord, Receiver, QuadraPaddle, 5 Amp, 36", 22 AWG Twisted Pair, Single Ended	510 150 115/116 510 160 101/102/107
7-121 424 000-036	Signal Patchcord, ITA, QuadraPaddle, 36", 5 Amp, 24 AWG Twisted Pair, Single Ended	510 151 105/106 510 161 101/102/107
7-123 426 000-036	Signal Patchcord, ITA, QuadraPaddle, 36", 26 AWG Twisted Pair, Single Ended	
7-121 422 000-036	Signal Patchcord, ITA, QuadraPaddle, 36", 22 AWG Twisted Pair, Single Ended	510 151 105/106 510 161 101/102/107
QUADRAPADDLE ITA TWISTED PAIR JUMPERS		
7-121 424 121-006	Signal Patchcord, ITA, QuadraPaddle, 6", 24 AWG Twisted Pair, Double Ended Jumpers	510 151 105/106 510 161 101/102/107
7-121 422 121-006	Signal Patchcord, ITA, QuadraPaddle, 6", 22 AWG Twisted Pair, Double Ended Jumpers	510 151 105/106 510 161 101/102/107
USB PATCHCORDS		
7-124 872 596-036	Signal Patchcord, Receiver, QuadraPaddle, 36", USB 2.0 Wire, to USB Type A Plug	
7-121 872 596-036	Signal Patchcord, ITA, QuadraPaddle, 36", USB 2.0 Wire, to USB Type A Plug	
RJ45 PATCHCORDS		
7-124 870 595-036	Signal Patchcord, Receiver, QuadraPaddle, 36", CAT5e, to RJ45 Plug	
7-123 870 595-036	Signal Patchcord, ITA, QuadraPaddle, 36", CAT5e, to RJ45 Plug	

NOTE: To instantly design patchcords online, use our Patchcord Designer at vpc.com/patchcorddesigner

84 Position QuadraPaddle Module Inserts

Specifications

Material	Black high-temp thermoplastic
Operating Temperature	-40°C to 125°C
Dielectric Withstanding Voltage (DWV)	1500 VDC Min.
Available Contact Positions	84
Module Positions Needed	1

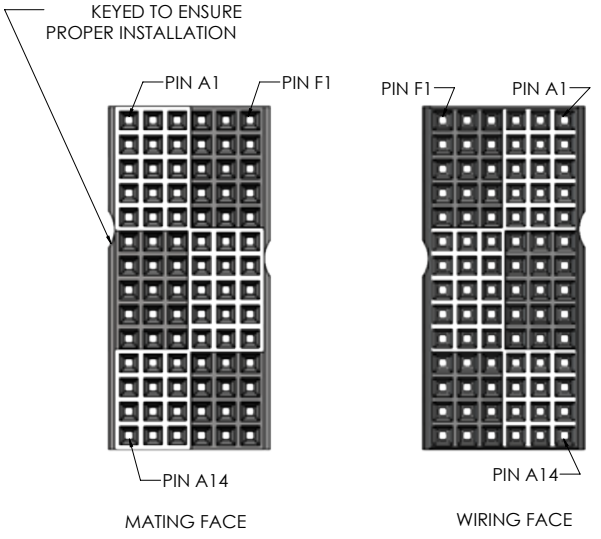

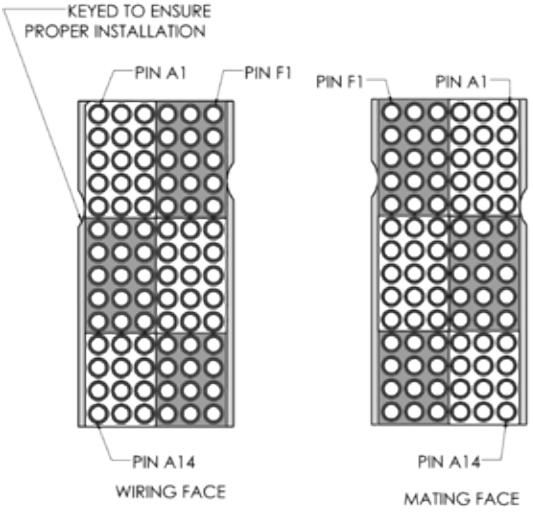

Receiver • **Part # 510 143 002** ITA • **Part # 510 144 002**

Part #	Description	Contacts Used
I2 MX RECEIVER QUADRAPADDLE MODULE INSERTS		
510 143 002	QuadraPaddle Signal, Module Insert, Receiver, i2 MX, 84 Position, Crimp	610 138 216
510 143 003	QuadraPaddle Signal, Module Insert, Receiver, i2 MX, 84 Position, Fully Loaded with Twin Female Contacts (610 138 200)	610 138 200
I2 MX ITA QUADRAPADDLE MODULE INSERT		
510 144 002	QuadraPaddle Signal, Module Insert, ITA, i2 MX, 84 Position, Crimp	610 138 109 610 138 112 610 138 115 610 138 122

160 Position QuadraPaddle Signal Modules

Module Specifications

Material	Black high-temp thermoplastic
Temperature	Operating • -55°C to 125°C Non-operating • -65°C to 220°C
Dielectric Withstanding Voltage (DWV)	1500 VDC min.
Available Contact Positions	160
Module Positions Needed	1

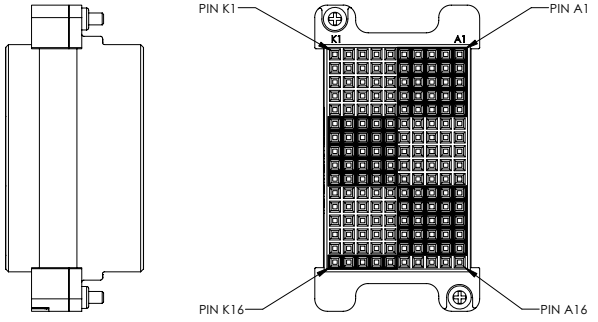

WIRING SIDE

Receiver • **Part # 510 160 101**

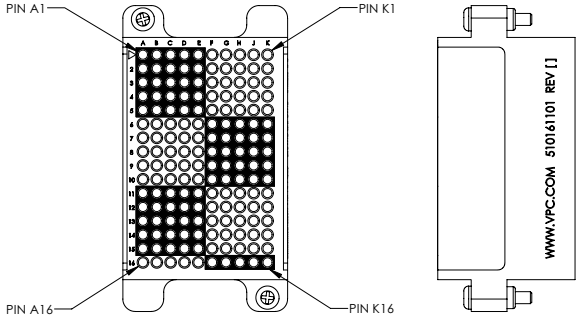

WIRING SIDE

ITA • **Part # 510 161 101**

Part #	Description	Contacts Used
ICON RECEIVER QUADRAPADDLE MODULES		
510 160 101	Signal Module, Receiver, QuadraPaddle, iCon, 160 Position, for Crimp Contacts	610 138 216
510 160 105	Signal Module, Receiver, QuadraPaddle, iCon, 160 Position, Fully Loaded with Twin Female Contacts (610 138 200)	610 138 117/118/200
510 160 122	Signal Module, Receiver, QuadraPaddle, iCon, 160 Position, Fully Loaded with Twin Female Contacts and Round Posts (610 138 200 and 610 138 117)	610 138 117/200
ICON ITA QUADRAPADDLE MODULE		
510 161 101	Signal Module, ITA, QuadraPaddle, iCon, 160 Position	610 138 109/112/115/122

192 Position QuadraPaddle® Signal Modules

Module Specifications

Material	Black liquid crystal polymer
Temperature	Operating • −55° C to 125° C Non-operating • −65° C to 225°C
Dielectric Withstanding Voltage (DWV)	1500 VDC min.
Available Contact Positions	192
Module Positions Needed	1

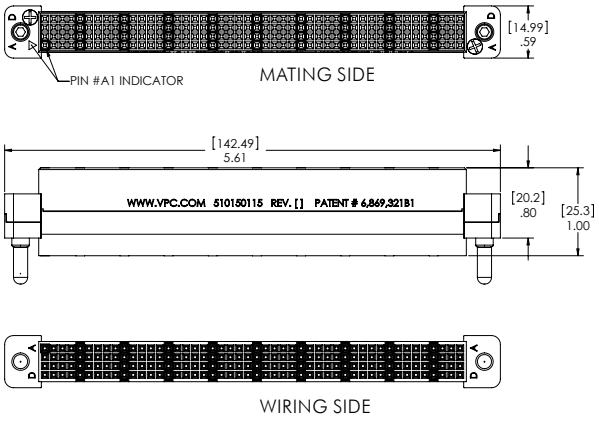

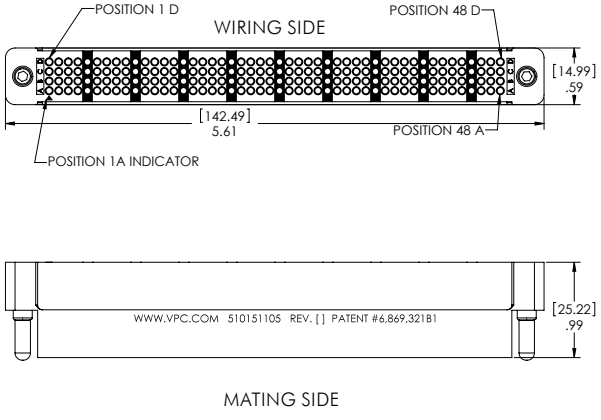

Receiver • **Part # 510 150 115**

ITA • **Part # 510 151 105**

Part #	Description	Contacts Used
192 POSITION RECEIVER MODULES AND STRAIN RELIEFS		
510 150 130	Signal Module, Receiver, QuadraPaddle, 192 Position, Fully Loaded with Twin Female Contacts (610 138 200)	610 138 117/118/200
510 150 115	Signal Module, Receiver, QuadraPaddle, 192 Position, Wire Crimp, Unloaded	610 138 216
510 150 136	Signal Module, Receiver, QuadraPaddle, 192 Position, Fully Loaded with Twin Female Contacts and Square Posts for Wire Wrap (610 138 200 and 610 138 118)	610 138 118/200
510 150 137	Signal Module, Receiver, QuadraPaddle, 192 Position, Fully Loaded with Twin Female Contacts and Round Posts (610 138 200 and 610 138 117)	610 138 117/200
510 109 349	Strain Relief Plate for QuadraPaddle 192 Position Modules	
192 POSITION ITA MODULES AND STRAIN RELIEFS		
510 151 105	Signal Module, ITA, QuadraPaddle, 192 Position, Unloaded	610 138 109/112/115/122
510 151 107	Signal Module, ITA, QuadraPaddle, 192 Position, Fully Loaded with Round Posts (610 138 115)	610 138 115
510 151 124	Signal Module, ITA, QuadraPaddle, 192 Position, Fully Loaded with Square Posts for Wire Wrap with Anti-Rotation (610 138 122)	610 138 122
510 109 296	Strain Relief Plate for ITA Modules	

480 Position QuadraPaddle® Signal Modules

Module Specifications

Receiver Material	Black liquid crystal polymer
Receiver Temperature	Operating • −55° C to 125° C Non-operating • −65° C to 225° C
ITA Material	Black PPS
ITA Temperature	Operating • −55° C to 125° C Non-operating • −65° C to 220° C
Dielectric Withstanding Voltage (DWV)	1500 VDC min.
Available Contact Positions	480
Module Positions Needed	2

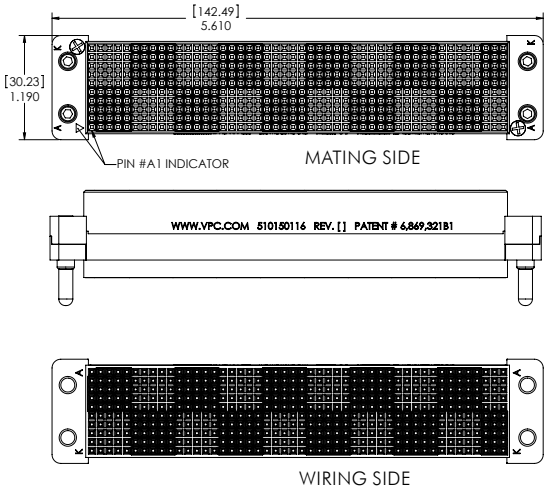

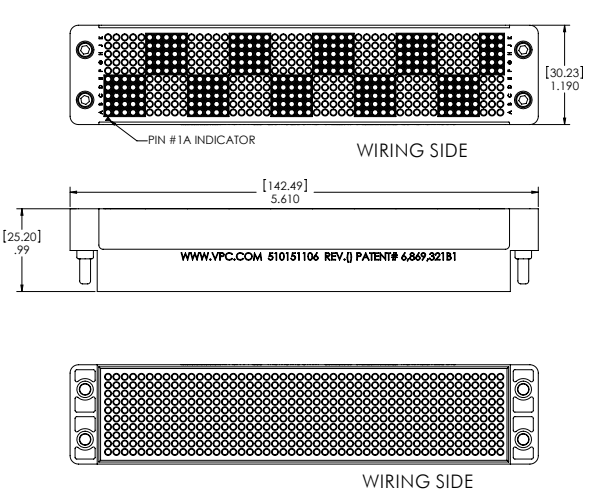

Receiver • **Part # 510 150 116**

ITA • **Part # 510 151 106**

Part #	Description	Contacts Used
480 POSITION RECEIVER MODULES AND STRAIN RELIEFS		
510 150 131	Signal Module, Receiver, QuadraPaddle, 480 Position, Fully Loaded with Twin Female Contacts (610 138 200)	610 138 117/118/200
510 150 116	Signal Module, Receiver, QuadraPaddle, 480 Position, Unloaded	610 138 216
510 150 147	Signal Module, Receiver, QuadraPaddle, 480 Position, Fully Loaded with Twin Female Contacts and Square Posts for Wire Wrap (610 138 200 and 610 138 118)	610 138 118/200
510 150 135	Signal Module, Receiver, QuadraPaddle, 480 Position, Fully Loaded with Twin Female Contacts and Round Posts (610 138 200 and 610 138 117)	610 138 117/200
510 109 348	Strain Relief Plate for QuadraPaddle 480 Position Receiver Modules	
480 POSITION ITA MODULES AND STRAIN RELIEFS		
510 151 106	Signal Module, ITA, QuadraPaddle, 480 Position, Unloaded	610 138 109/112/115/122
510 151 108	Signal Module, ITA, QuadraPaddle, 480 Position, Fully Loaded with Round Posts (610 138 115)	610 138 115
510 151 127	Signal Module, ITA, QuadraPaddle, 480 Position, Fully Loaded with Square Posts for Wire Wrap with Anti-Rotation (610 138 122)	610 138 122
510 109 296	Strain Relief Plate for ITA Modules	

SCSI and VHDCI Receiver PCB Adapters • 2 x 68

PCB Specifications

Current Rating	1 amp @ 30 VAC
Temperature	–55° C to 105° C
Termination Resistance	50 mΩ typical
Insulation Resistance	1000 MΩ min.
Dielectric Withstanding Voltage (DWV)	500 VAC min.
Module Positions Needed	1

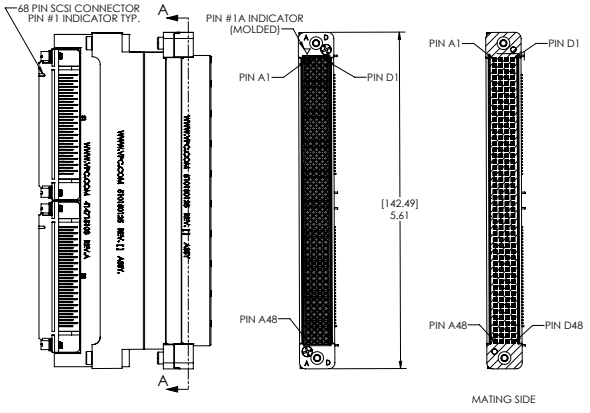

PCB Adapter, Receiver • **Part # 510 150 125**

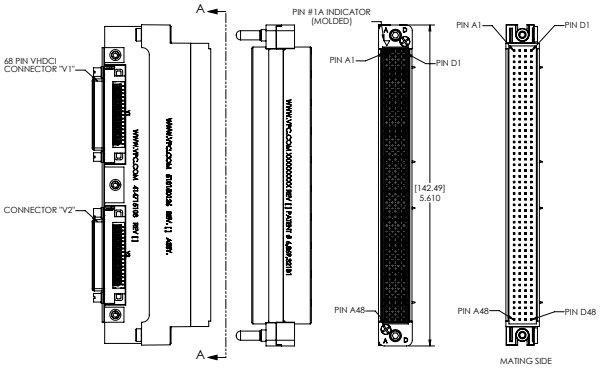

PCB Adapter, Receiver • **Part # 510 150 126**

Part #	Description

2 X 68 SCSI PCB ADAPTERS

510 150 125	PCB Adapter, Receiver, QuadraPaddle, 192 Position, to PCB-Mounted 2x68 Male SCSI Connectors
510 150 126	PCB Adapter, Receiver, QuadraPaddle, 192 Position, to PCB-Mounted 2x68 Female VHDCI Connectors

** For PCB Layout information, refer to PCB adapter customer drawing online at vpc.com*

STANDARD CABLES FOR PCB ADAPTERS – 18"

515 109 113	Cable Assembly, 68 Pin Female SCSI (Thumb Screws) to 68 Pin Male VHDCI (Thumb Screws), 18"
515 109 117	Cable Assembly, 68 Pin Female SCSI (Thumb Screws) to 68 Pin Female SCSI (Thumb Screws), 18"
515 109 119	Cable Assembly, 68 Pin Female SCSI (Thumb Screws) to 68 Pin Male SCSI (Spring Latch), 18"
515 109 121	Cable Assembly, 68 Pin Female SCSI (Thumb Screws) to 68 Pin Male SCSI (Thumb Screws), 18"
515 109 130	Cable Assembly, 68 Pin Female SCSI (Thumb Screws) to 68 Pin Female SCSI (Spring Latch), 18"
515 109 001	Cable Assembly, 68 Pin Male VHDCI (Thumb Screws) to 68 Pin Male VHDCI (Thumb Screws), 18"

STANDARD CABLES FOR PCB ADAPTERS – 36"

515 109 114	Cable Assembly, 68 Pin Female SCSI (Thumb Screws) to 68 Pin Male VHDCI (Thumb Screws), 36"
515 109 118	Cable Assembly, 68 Pin Female SCSI (Thumb Screws) to 68 Pin Female SCSI (Thumb Screws), 36"
515 109 120	Cable Assembly, 68 Pin Female SCSI (Thumb Screws) to 68 Pin Male SCSI (Spring Latch), 36"
515 109 122	Cable Assembly, 68 Pin Female SCSI (Thumb Screws) to 68 Pin Male SCSI (Thumb Screws), 36"
515 109 131	Cable Assembly, 68 Pin Female SCSI (Thumb Screws) to 68 Pin Female SCSI (Spring Latch), 36"
515 109 002	Cable Assembly, 68 Pin Male VHDCI (Thumb Screws) to 68 Pin Male VHDCI (Thumb Screws), 36"

** Custom cable assemblies for specific PXI and VXI instrumentation are available at vpc.com/wire*

SCSI and VHDCI ITA PCB Adapters • 2 x 68

PCB Specifications

Current Rating	1 amp @ 30 VAC
Temperature	–55° C to 105° C
Termination Resistance	50 mΩ typical
Insulation Resistance	1000 MΩ min.
Dielectric Withstanding Voltage (DWV)	500 VAC min.
Module Positions Needed	1

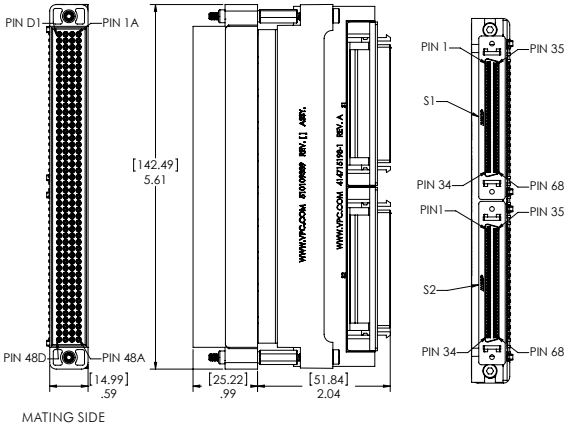

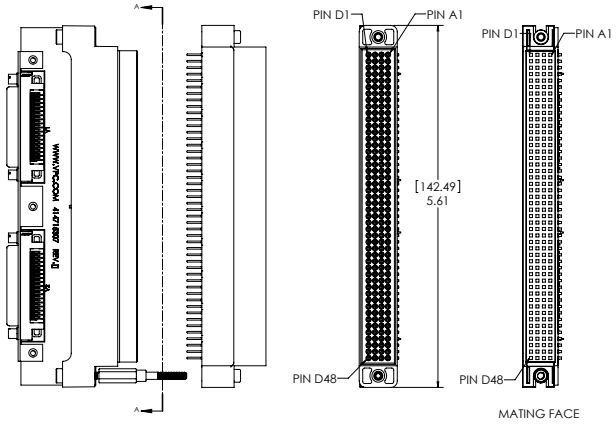

PCB Adapter, ITA • **Part # 510 109 339**

PCB Adapter, ITA • **Part # 510 151 123**

Part #	Description

2 X 68 ITA PCB ADAPTERS

510 109 339	PCB Adapter, ITA, QuadraPaddle, 192 Position, to PCB-mounted 2x68 Pin Female SCSI Connectors
510 150 165	PCB Adapter, ITA, QuadraPaddle, 192 Position, to PCB-Mounted 2x68 Pin Male SCSI Connectors
510 151 123	PCB Adapter, ITA, QuadraPaddle, 192 Position, to PCB-Mounted 2x68 Pin Female VHDCI Connectors

** For PCB Layout information, refer to PCB adapter customer drawing online at vpc.com*

STANDARD CABLES FOR PCB ADAPTERS – 18"

515 109 119	Cable Assembly, 68 Pin Female SCSI (Thumb Screws) to 68 Pin Male SCSI (Spring Latch), 18"
515 109 001	Cable Assembly, 68 Pin Male VHDCI (Thumb Screws) to 68 Pin Male VHDCI (Thumb Screws), 18"

** Custom cable assemblies for specific PXI and VXI instrumentation are available at vpc.com/wire*

SCSI PCB Adapter • 1 x 100

PCB Specifications

Current Rating	1 amp @ 30 VAC
Temperature	–55° C to 105° C
Termination Resistance	50 mΩ typical
Insulation Resistance	1000 MΩ min.
Dielectric Withstanding Voltage (DWV)	500 VAC min.
Module Positions Needed	1

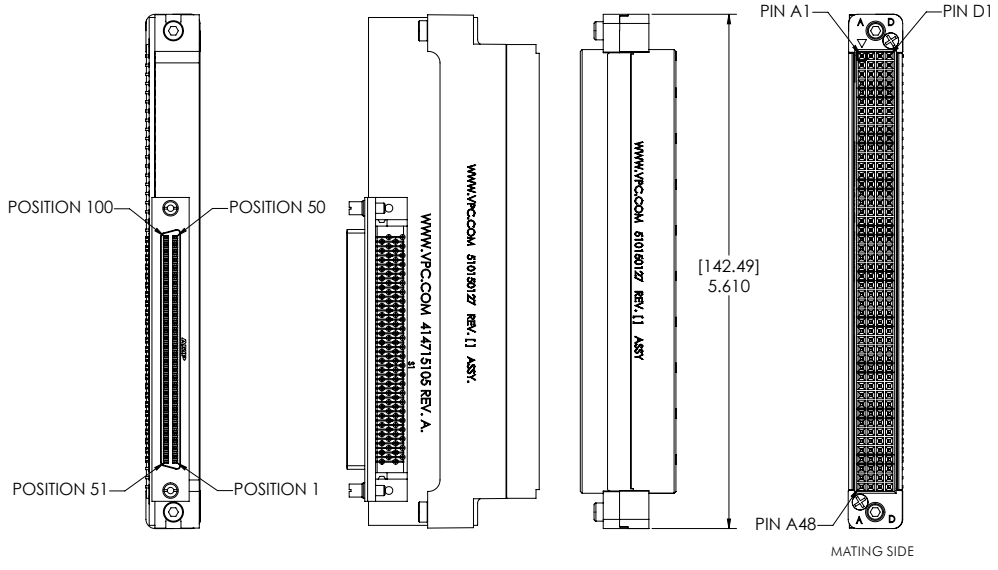

PCB Adapter, Receiver • **Part # 510 150 127**

Part #	Description

1 X 100 SCSI PCB ADAPTER

510 150 127 PCB Adapter, Receiver, QuadraPaddle, 192 Position, to PCB-Mounted 1x100 Pin Female SCSI Connector

** For PCB Layout information, refer to PCB Adapter customer drawing online at vpc.com*

STANDARD CABLES FOR PCB ADAPTERS – 18" AND 36"

515 109 134 Cable Assembly, 100 Pin Male SCSI (Thumb Screws) to 100 Pin Male SCSI, Twisted Pair, Double Ended, 18"

515 109 133 Cable Assembly, 100 Pin Male SCSI (Thumb Screws) to 100 Pin Male SCSI, Twisted Pair, Double Ended, 36"

** Custom cable assemblies for specific PXI and VXI instrumentation are available at vpc.com/wire*

SCSI PCB Adapter • 2 x 96

PCB Specifications

Current Rating	1 amp @ 30 VAC
Temperature	–55° C to 105° C
Termination Resistance	50 mΩ typical
Insulation Resistance	1000 MΩ min.
Dielectric Withstanding Voltage (DWV)	500 VAC min.
Module Positions Needed	1

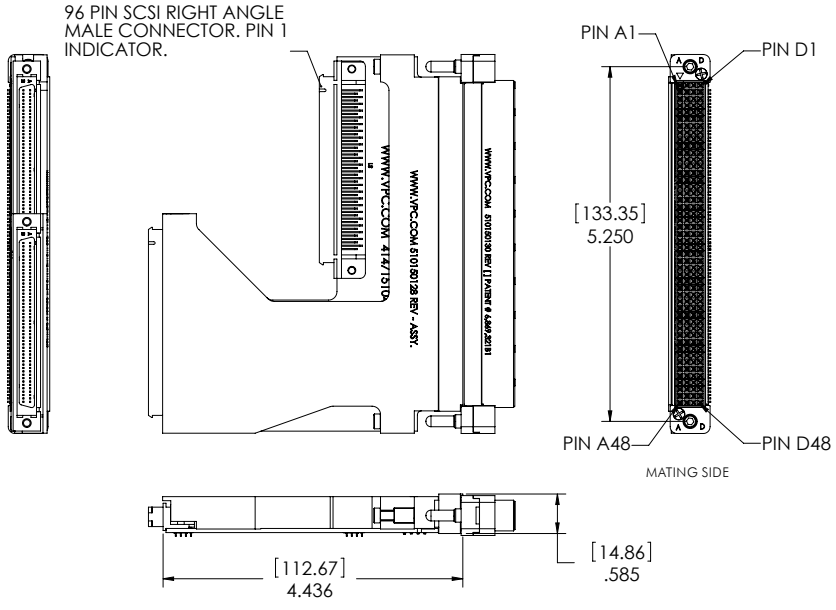

PCB Adapter, Receiver • **Part # 510 150 128**

Part #	Description

2 X 96 SCSI PCB ADAPTER

510 150 128 PCB Adapter, Receiver, QuadraPaddle, 192 Position, to 2x96 Pin Male SCSI Connectors

** For PCB Layout information, refer to PCB Adapter customer drawing online at vpc.com*

STANDARD CABLES FOR PCB ADAPTERS – 18" AND 36"

515 109 007 Cable Assembly, 96 Pin Female SCSI (Spring Latch) to 96 Pin Female SCSI, Double Ended, 18"

515 109 008 Cable Assembly, 96 Pin Female SCSI (Spring Latch) to 96 Pin Female SCSI, Double Ended, 36"

** Custom cable assemblies for specific PXI and VXI instrumentation are available at vpc.com/wire*

PCB Adapter

PCB Specifications

Current Rating	3 amps @ 50 volts RMS
Temperature	–55° C to 105° C
Termination Resistance	50 mΩ typical
Insulation Resistance	1000 MΩ min.
Dielectric Withstanding Voltage (DWV)	500 VAC min.
Module Slots Needed	1

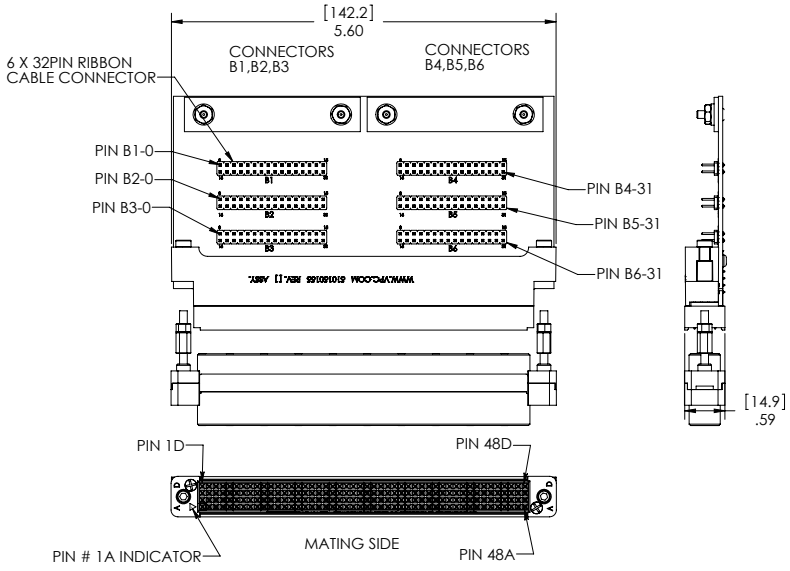

PCB Adapter, Receiver • **Part # 510 150 155**

Part #	Description

PCB ADAPTER WITH ALL PINS WIRED

510 150 155 PCB Adapter, Receiver, QuadraPaddle, 192 Position, to PCB-Mounted 6x32-Pin Ribbon Cable Headers

** For PCB Layout information, refer to PCB Adapter customer drawing online at vpc.com*

STANDARD CABLES FOR PCB ADAPTERS – 20" AND 36"

515 109 162 Cable Assembly, 32 Pin .100" [2.54 mm] Pitch Ribbon Cable, Double Ended, 20"

515 109 163 Cable Assembly, 32 Pin .100" [2.54 mm] Pitch Ribbon Cable, Double Ended, 36"

NOTE: This is a left mount PCB adapter for optimal cable management. Do not use beside a right mount PCB Adapter.

PCB Adapter Solutions

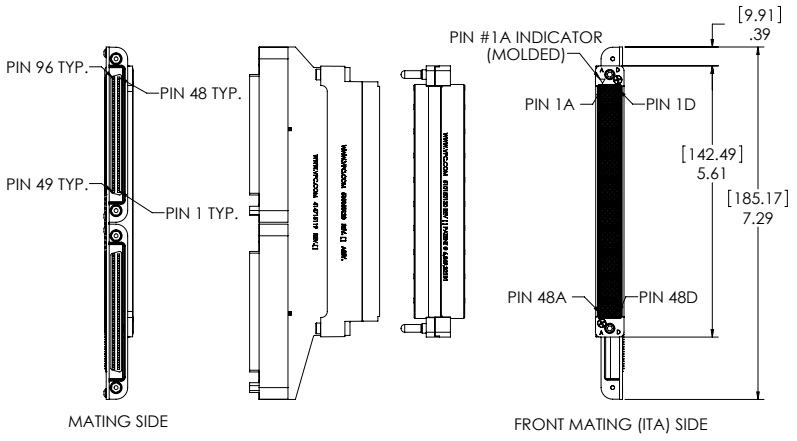

PCB Adapter, Receiver, QuadraPaddle, 192 Position, to PCB-Mounted 2x96 SCSI Connectors • **Part # 510 150 120**

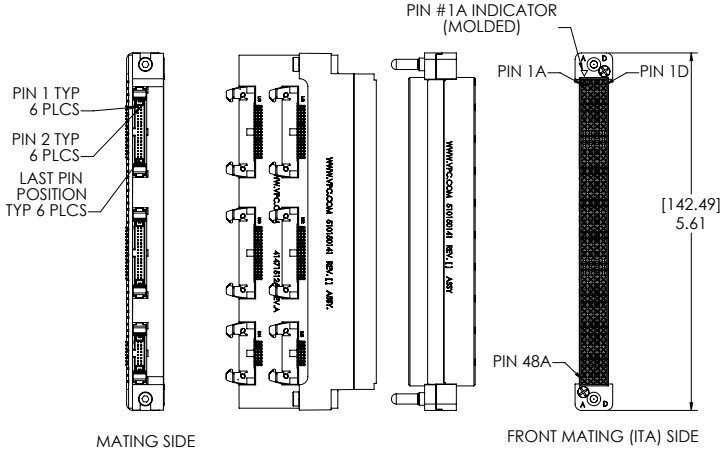

PCB Adapter, Receiver, QuadraPaddle, 192 Position, to NI PXI-2532 • **Part # 510 150 141**

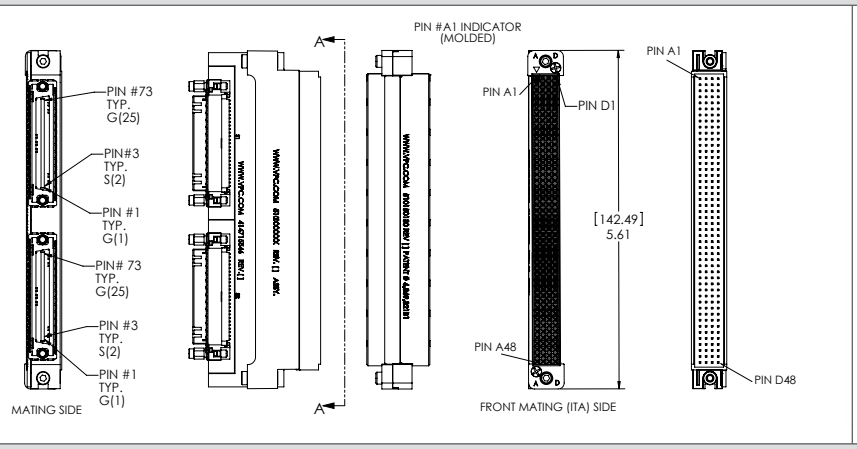

PCB Adapter, Receiver, QuadraPaddle, 192 Position, to 2 PCB Mounted 12X Male InfiniBand Connectors (LVDS) • **Part # 510 150 210**

For more PCB adapter options, visit vpc.com/wire

QuadraPaddle® 192 Position Right Angle Contact Modules

PCB Specifications

Receiver and ITA Material	Black LCP/black PEI
Temperature	–55° C to 125° C
Dielectric Withstanding Voltage (DWV)	1500 VDC min.
Available Contact Positions	192
Module Positions Needed	1

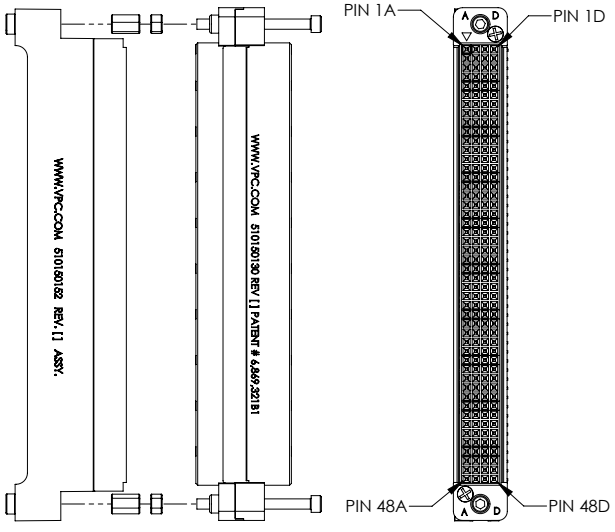

Receiver • Part # 510 150 152

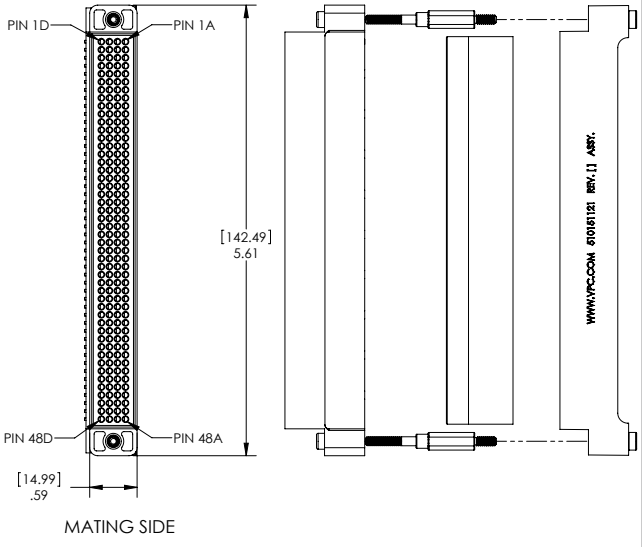

ITA • Part # 510 151 121

Part #	Description
192 POSITION RECEIVER RIGHT ANGLE CONTACT MODULES	
510 150 152	Signal Module, Receiver, QuadraPaddle, 192 Position, Right Angle Contacts for Custom PCB Mounting (510 150 130 and 510 109 315)
510 109 315	Header/Shroud Right Angle Kit, Receiver, QuadraPaddle, for Custom PCB Mounting (requires 510 150 130)
192 POSITION ITA RIGHT ANGLE CONTACT MODULES	
510 151 121	Signal Module, ITA, QuadraPaddle, 192 Position, Right Angle Contacts for Custom PCB Mounting (510 151 107 and 510 109 316)
510 109 316	Header/Shroud Right Angle Kit, ITA, QuadraPaddle, for Custom PCB Mounting (requires 510 151 107)

TriPaddle Signal Contacts

Contact Specifications

Operating Current and Voltage	7 amps max. continuous (20 AWG) 10 amps max. continuous (14 AWG) 600 volt max. use of wire MIL-W-16878/4
Contact Resistance	4 mΩ max. Measured at 50 mV @ 100 mA
Mating Force	10 oz. nominal [.25 kg]
Dielectric Withstanding Voltage (DWV)	1500 VDC min.
Insulation Resistance	4000 MΩ min.
Contact Body Material	Female (RCV) – BeCu Male (ITA) – brass
Contact Plating	Female (RCV) – 30μ" Au over 100μ" Ni Male (ITA) – 30μ" Au over 100μ" Ni 10 Amp (RCV & ITA) – 50μ" Au over 100μ" Ni
Cycle Life	20,000 cycles

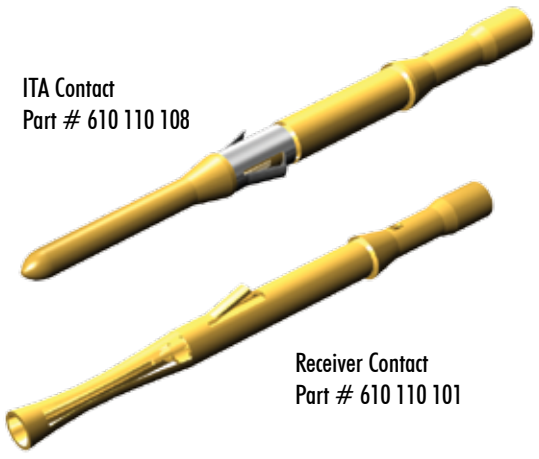

ITA Contact
Part # 610 110 108

Receiver Contact
Part # 610 110 101

Receiver Contact
Part # 610 110 128

ITA Contact
Part # 610 110 129

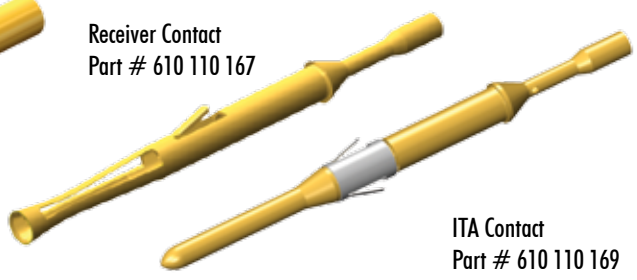

Receiver Contact
Part # 610 110 167

ITA Contact
Part # 610 110 169

TriPaddle Contact
20 AWG & 14 AWG
T-Rise Test

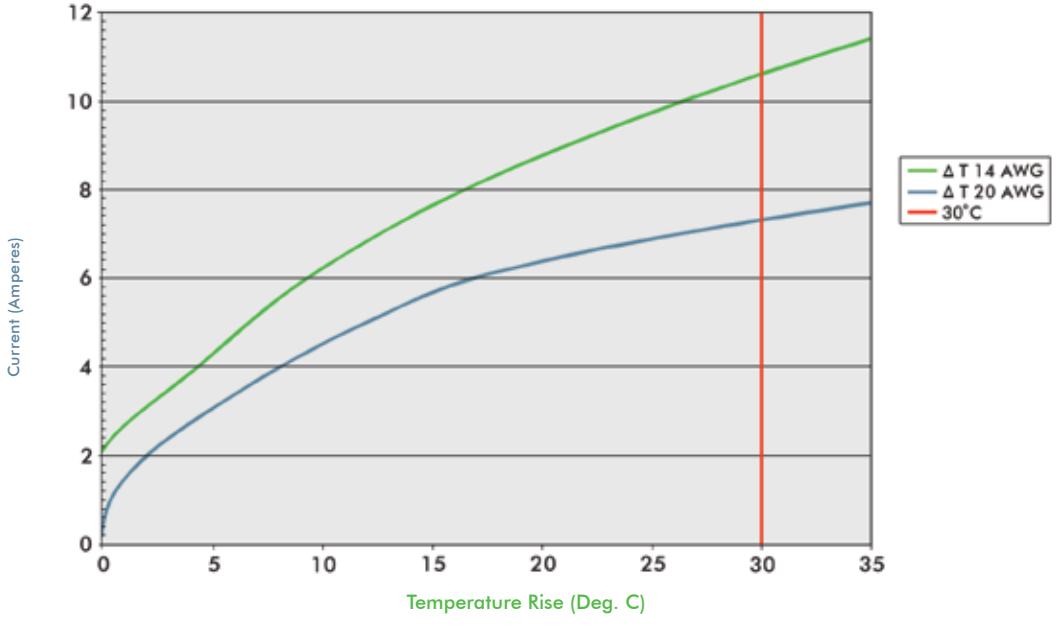

TriPaddle Signal Contacts

ITA Contact
Part # 610 110 113

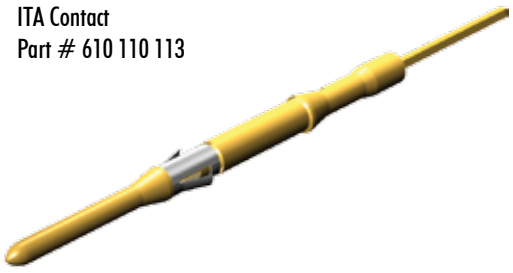

Receiver Contact
Part # 610 110 104

Part #	Description	Used in Module
TRIPADDLE RECEIVER CONTACTS		
610 110 101	Signal Contact, Receiver, TriPaddle, 7 Amp, 20-24 AWG, 30µ" Gold	510 104 134/136/149/206/243/261/306/307 510 160 103/108/109/111/115/124
610 110 128	Signal Contact, Receiver, TriPaddle, 10 Amp, 14-18 AWG max, 50µ" Gold	510 104 134/136/149/206/243/261/306/307 510 160 103/108/109/111/115/124
610 110 167	Signal Contact, Receiver, TriPaddle, 7 Amp, 26-28 AWG, 30µ" Gold	510 104 134/136/149/206/243/261/306/307 510 160 103/108/109/111/115/124
610 110 177	Signal Contact, Receiver, TriPaddle, 10 Amp, 14-18 AWG, 30µ" Gold	510 104 134/136/149/206/243/261/306/307 510 160 103/108/109/111/115/124
610 110 179	Signal Contact, Receiver, TriPaddle, 5 Amp, .025" Round Post, 30µ" Gold	510 104 134/136/149/206/243/261/306/307 510 160 103/108/109/111/115/124
TRIPADDLE ITA CONTACTS		
610 110 108	Signal Contact, ITA, TriPaddle, 7 Amp, 20-24 AWG, 30µ" Gold	510 108 101/126/131/178/210/245 510 161 103/108/109/111/115
610 110 129	Signal Contact, ITA, TriPaddle, 10 Amp, 14-18 AWG max, 30µ" Gold	510 108 101/126/131/178/210/245 510 161 103/108/109/111/115
610 110 146	Signal Contact, ITA, TriPaddle, 7 Amp, 20-24 AWG, 50µ" Gold, Crimp/Solder	510 108 101/126/131/178/210/245 510 161 103/108/109/111/115
610 110 169	Signal Contact, ITA, TriPaddle, 7 Amp, 26-28 AWG, 30µ" Gold	510 108 101/126/131/178/210/245 510 161 103/108/109/111/115
610 110 113	Signal Contact, ITA, TriPaddle, 7 Amp, .025" Post for Wire Wrap, 30µ" Gold	510 108 101/126/131/178/210/245 510 161 103/108/109/111/115

Part #	Description	Used on Contact
CRIMP TOOLS		
910 101 102	Tool, Crimp, 10 Amp TriPaddle, Thermocouple, Micro Power, Receiver and ITA, Locator Required	610 110 128/129/177
910 101 103	Tool, Crimp, QuadraPaddle and TriPaddle, Receiver and ITA Contacts, Locator Required	610 110 101/108/167/169/179
LOCATORS		
910 104 127	Tool, Locator, TriPaddle, Receiver	610 110 101/167/179
910 104 107	Tool, Locator, TriPaddle, ITA	610 110 108/169
910 104 116	Tool, Locator, TriPaddle, Receiver	610 110 128
910 104 118	Tool, Locator, TriPaddle, ITA	610 110 129
EXTRACTION TOOL		
910 110 102	Tool, Extraction, Receiver and ITA, TriPaddle and Thermocouple	

TriPaddle Signal Patchcords

TriPaddle Receiver Patchcord	TriPaddle ITA Patchcord

Part #	Description	Used in Module
TRIPADDLE RECEIVER AND ITA PATCHCORDS		
7-104 924 000-036	Signal Patchcord, Receiver, TriPaddle, 3 Amp, 36", 24 AWG, Single Ended	510 104 134/136/149/206/243/261/306/307 510 160 103/108/109/111/115/124
7-104 922 000-036	Signal Patchcord, Receiver, TriPaddle, 5 Amp, 36", 22 AWG, Single Ended	510 104 134/136/149/206/243/261/306/307 510 160 103/108/109/111/115/124
7-102 914 000-036	Signal Patchcord, Receiver, TriPaddle, 10 Amp, 36", 14 AWG, Single Ended	510 104 134/136/149/206/243/261/306/307 510 160 103/108/109/111/115/124
7-103 924 000-036	Signal Patchcord, ITA, TriPaddle, 36", 3 Amp, 24 AWG, Single Ended	510 108 101/126/131/178/210/245 510 161 103/108/109/111/115/
7-103 922 000-036	Signal Patchcord, ITA, TriPaddle, 36", 5 Amp, 22 AWG, Single Ended	510 108 101/126/131/178/210/245 510 161 103/108/109/111/115
7-101 914 000-036	Signal Patchcord, ITA, TriPaddle, 36", 10 Amp, 14 AWG, Single Ended	510 108 101/126/131/178/210/245 510 161 103/108/109/111/115
TRIPADDLE ITA PATCHCORD JUMPERS (DOUBLE ENDED)		
7-103 924 103-006	Signal Patchcord, ITA, TriPaddle, 6", 3 Amp, 24 AWG, Double Ended Jumpers	510 108 101/126/131/178/210/245 510 161 103/108/109/111/115
7-103 922 103-006	Signal Patchcord, ITA, TriPaddle, 6", 5 Amp, 22 AWG, Double Ended Jumpers	510 108 101/126/131/178/210/245 510 161 103/108/109/111/115
7-101 914 101-006	Signal Patchcord, ITA, TriPaddle, 6", 10 Amp, 14 AWG, Double Ended Jumpers	510 108 101/126/131/178/210/245 510 161 103/108/109/111/115

TriPaddle Receiver Twisted Pair Patchcord	TriPaddle ITA Twisted Pair Patchcord

Part #	Description	Used in Module
TRIPADDLE TWISTED PAIR RECEIVER AND ITA PATCHCORDS		
7-104 424 000-036	Signal Patchcord, Receiver, TriPaddle, 3 Amp, 36", 24 AWG Twisted Pair, Single Ended	510 104 134/136/149/206/243/261/306/307 510 160 103/108/109/111/115/124
7-104 422 000-036	Signal Patchcord, Receiver, TriPaddle, 5 Amp, 36", 22 AWG Twisted Pair, Single Ended	510 104 134/136/149/206/243/261/306/307 510 160 103/108/109/111/115/124
7-103 424 000-036	Signal Patchcord, ITA, TriPaddle, 36", 3 Amp, 24 AWG Twisted Pair, Single Ended	510 108 101/126/131/178/210/245 510 161 103/108/109/111/115
7-103 422 000-036	Signal Patchcord, ITA, TriPaddle, 36", 5 Amp, 24 AWG Twisted Pair, Single Ended	510 108 101/126/131/178/210/245 510 161 103/108/109/111/115
TRIPADDLE ITA TWISTED PAIR PATCHCORD JUMPERS (DOUBLE ENDED)		
7-103 424 103-006	Signal Patchcord, ITA, TriPaddle, 6", 24 AWG Twisted Pair, Double Ended Jumpers	510 108 101/126/131/178/210/245 510 161 103/108/109/111/115
7-103 422 103-006	Signal Patchcord, ITA, TriPaddle, 3 Amp, 6", 22 AWG Twisted Pair, Double Ended Jumpers	510 108 101/126/131/178/210/245 510 161 103/108/109/111/115
USB PATCHCORDS		
7-104 872 596-036	Signal Patchcord, Receiver, TriPaddle, 36", USB 2.0 Wire, to USB Type A Plug	
7-103 872 596-036	Signal Patchcord, ITA, TriPaddle, 36", USB 2.0 Wire, to USB Type A Plug	
RJ45 PATCHCORDS		
7-106 870 595-036	Signal Patchcord, Receiver, TriPaddle, 36", CAT5e, to RJ45 Plug	
7-105 870 595-036	Signal Patchcord, ITA, TriPaddle, 36", CAT5e, to RJ45 Plug	

** To instantly design patchcords online, use our Patchcord Designer at vpc.com/patchcorddesigner.*

33 Position TriPaddle Module Inserts

Specifications

Material	G10 epoxy glass
Operating Temperature	-40°C to 125°C
Dielectric Withstanding Voltage (DWV)	1500 VDC min.
Available Contact Positions	33
Module Positions Needed	1

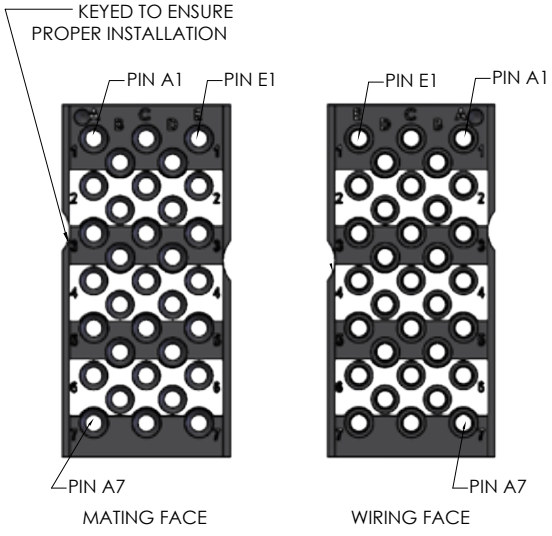

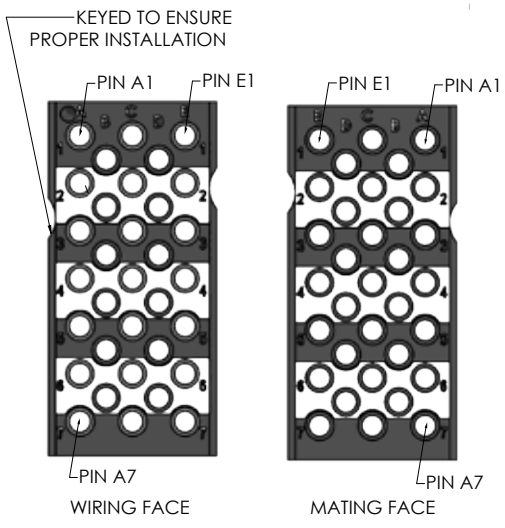

Receiver • **Part # 510 143 006** ITA • **Part # 510 144 006**

Part #	Description	Contacts Used
I2 MX RECEIVER TRIPADDLE MODULE INSERT		
510 143 006	TriPaddle Signal, Module Insert, Receiver, i2 MX, 33 Position	610 110 101 610 110 177 610 110 128 610 110 167
I2 MX ITA TRIPADDLE MODULE INSERT		
510 144 006	TriPaddle Signal, Module Insert, ITA, i2 MX, 33 Position	610 110 108 610 110 113 610 110 129 610 110 169

96 Position TriPaddle Signal Modules

Module Specifications

Material	Black Ryton R4-230 (ITA) G10 epoxy glass (receiver)
Temperature	Operating • -55° C to 125° C Non-operating • -55° C to 140° C
Dielectric Withstanding Voltage (DWV)	1500 VDC min.
Available Contact Positions	96
Module Positions Needed	1

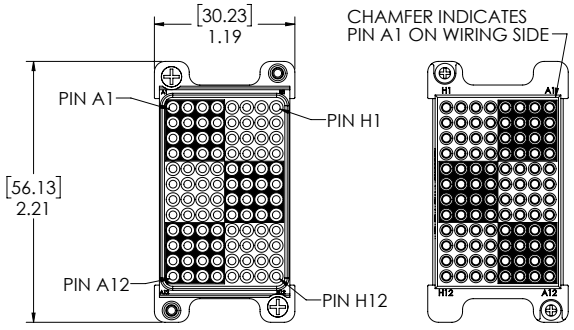

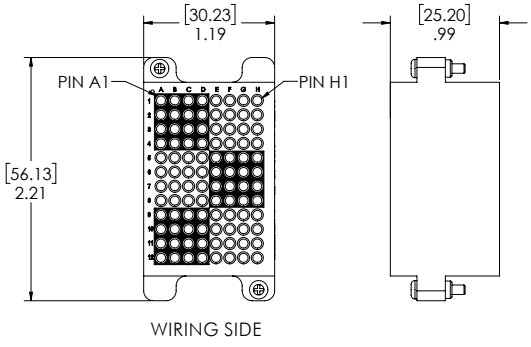

Receiver • Part # 510 160 108 | **ITA • Part # 510 161 108**

Part #	Description	Contacts Used
ICON RECEIVER TRIPADDLE SIGNAL MODULE		
510 160 108	Signal Module, Receiver, TriPaddle, iCon, 96 Position	610 110 101/104/128/167/177/179
ICON ITA TRIPADDLE SIGNAL MODULE		
510 161 108	Signal Module, ITA, TriPaddle, iCon, 96 Position	610 110 108/113/129/169

64 Position TriPaddle Signal Modules

Module Specifications

Receiver Material	Black PPS
Receiver Temperature	Operating • −55° C to 125° C Non-operating • −65° C to 220° C
ITA Material	PBT
ITA Temperature	Operating • -40° C to 125° C Non-operating • -40° C to 140° C
Dielectric Withstanding Voltage (DWV)	1500 VDC min.
Available Contact Positions	64
Module Positions Needed	1

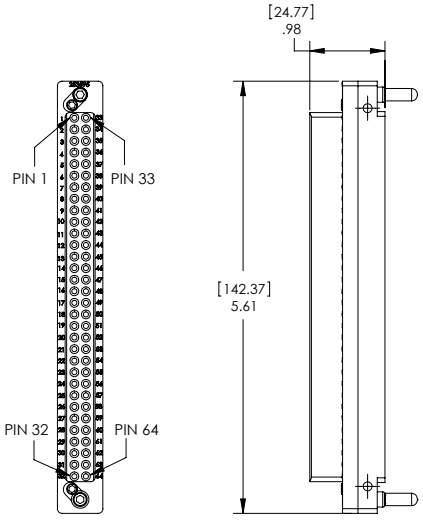

Receiver • Part # 510 104 134

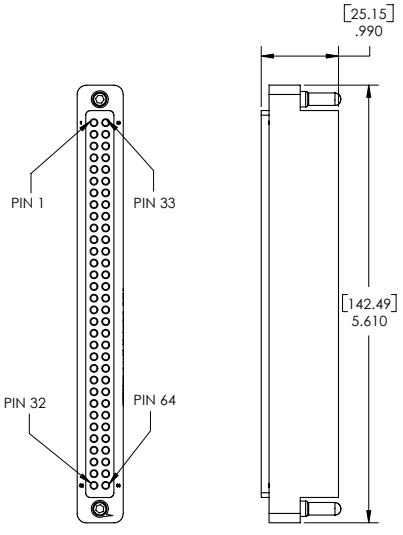

ITA • Part # 510 108 101

Part #	Description	Contacts Used
64 POSITION RECEIVER MODULES AND STRAIN RELIEFS		
510 104 134	Signal Module, Receiver, TriPaddle, 64 Position	610 110 101/104/128/167/177/179
510 109 116	Strain Relief Plate for Select Receiver Modules	
64 POSITION ITA MODULES AND STRAIN RELIEFS		
510 108 101	Signal Module, ITA, TriPaddle, 64 Position	610 110 108/113/129/169
510 109 296	Strain Relief Plate for ITA Modules	

96 Position TriPaddle Signal Modules

Module Specifications

Material	Black PPS
Temperature	Operating • −55° C to 125° C Non-operating • −65° C to 220° C
Dielectric Withstanding Voltage (DWV)	1500 VDC min.
Available Contact Positions	96
Module Positions Needed	1

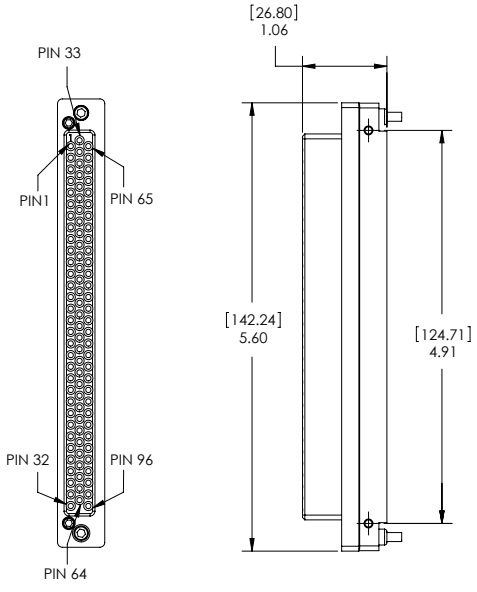

Receiver • Part # 510 104 136

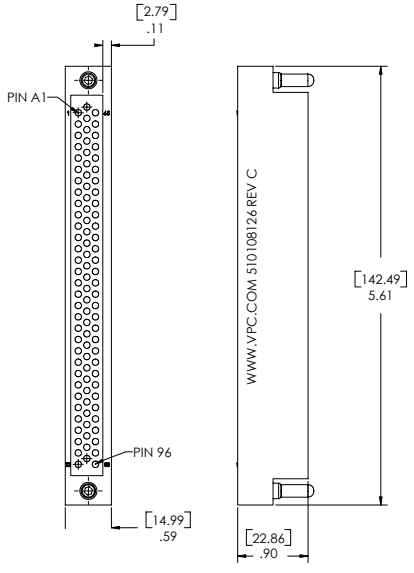

ITA • Part # 510 108 126

Part #	Description	Contacts Used
96 POSITION RECEIVER MODULE AND STRAIN RELIEF		
510 104 136	Signal Module, Receiver, TriPaddle, 96 Position	610 110 101/104/128/167/177/179
510 109 116	Strain Relief Plate for Select Receiver Modules	
96 POSITION ITA MODULE AND STRAIN RELIEF		
510 108 126	Signal Module, ITA, TriPaddle, 96 Position	610 110 108/113/129/169
510 109 296	Strain Relief Plate for ITA Modules	

256 Position TriPaddle Signal Modules

Module Specifications

Receiver Material	Black PPS
Receiver Temperature	Operating • –55° C to 125° C Non-operating • –65° C to 220° C
ITA Material	Black-LCP
ITA Temperature	Operating • –55° C to 125° C Non-operating • –65° C to 200° C
Dielectric Withstanding Voltage (DWV)	1500 VDC min.
Available Contact Positions	256
Module Positions Needed	2

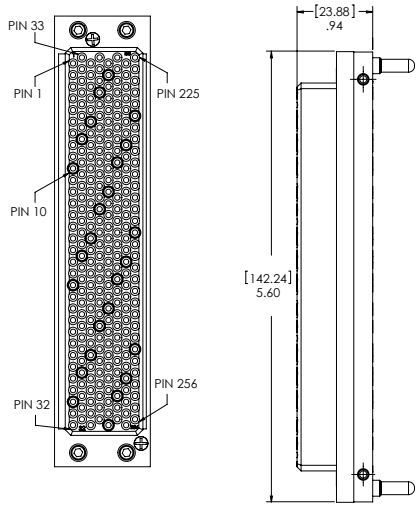

Receiver • Part # 510 104 149

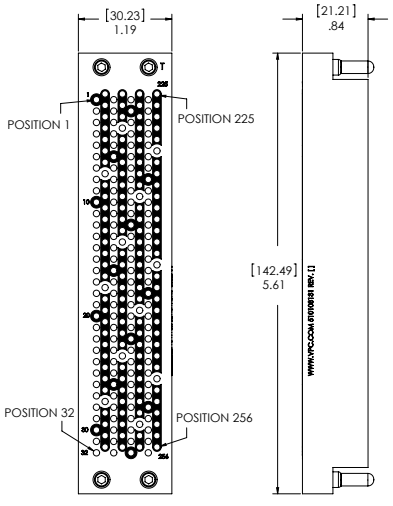

ITA • Part # 510 108 131

Part #	Description	Contacts Used
256 POSITION RECEIVER MODULE AND STRAIN RELIEF		
510 104 149	Signal Module, Receiver, TriPaddle, 256 Position	610 110 101/104/128/167/177/179
510 109 116	Strain Relief Plate for Select Receiver Modules	
256 POSITION ITA MODULE AND STRAIN RELIEF		
510 108 131	Signal Module, ITA, TriPaddle, 256 Position	610 110 108/113/129/169
510 109 296	Strain Relief Plate for ITA Modules	

TriPaddle 64 Position PCB Adapters

Module Specifications

Current Rating	1 amp @ 150 volts RMS
Temperature	–55° C to 105° C
Termination Resistance	50 mΩ typical
Insulation Resistance	1000 MΩ min.
DWV	500 volts RMS
Connector 1	34 pin ribbon cable
Connector 2	34 pin ribbon cable
Module Positions Needed	1

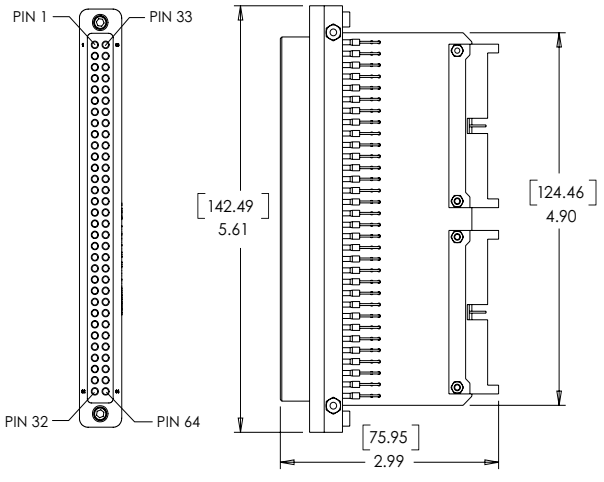

Receiver • Part # 510 104 128

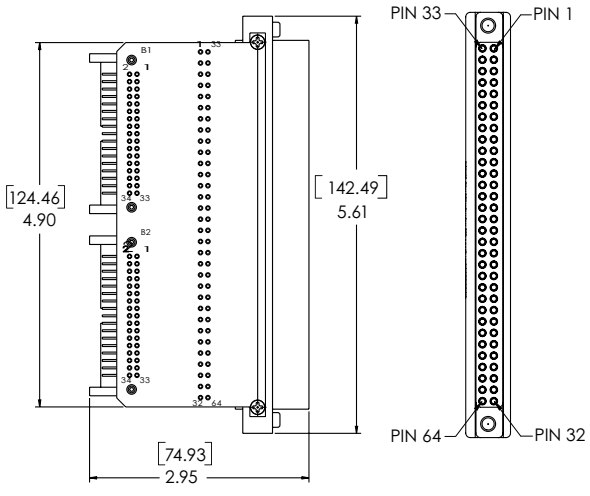

ITA • Part # 510 108 140

Part #	Description

64 POSITION RECEIVER PCB ADAPTER

510 104 128 PCB Adapter, Receiver, TriPaddle, 64 Position, to PCB-Mounted 2x34 pin (BERG 65496-019) Connectors

64 POSITION ITA PCB ADAPTER

510 108 140 PCB Adapter, ITA, TriPaddle, 64 Position, to PCB-Mounted 2x34 pin (BERG 65496-019) Connectors

** For PCB Layout information, refer to PCB Adapter customer drawing online at vpc.com*

** Custom cable assemblies for specific PXI and VXI instrumentation are available at vpc.com/wire*

TriPaddle 64 Position Right Angle Contact Modules

Module Specifications

Material	Black PPS
Temperature	Operating • –55° C to 125° C Non-operating • –65° C to 220°C
Available Contact Positions	64
Module Positions Needed	1

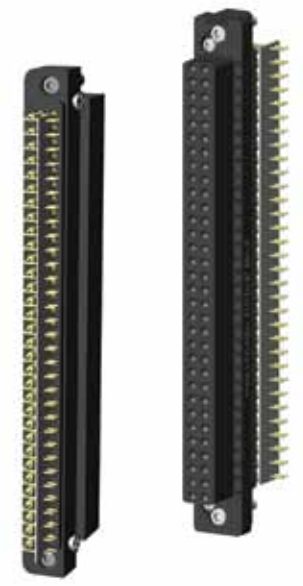

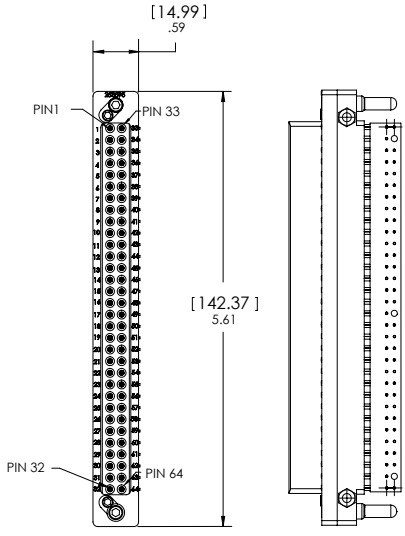

Receiver • Part # 510 104 187

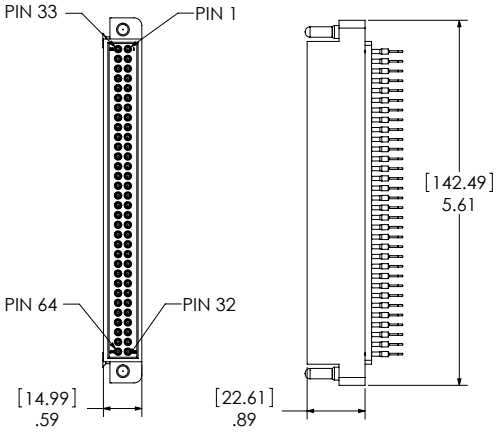

ITA • Part # 510 108 112

Part #	Description

64 POSITION RECEIVER RIGHT ANGLE CONTACT MODULE

510 104 187 Signal Module, Receiver, TriPaddle, 64 Position with Right Angle Contacts for Custom PCB Mounting

64 POSITION ITA RIGHT ANGLE CONTACT MODULE

510 108 112 Signal Module, ITA, TriPaddle, 64 Position with Right Angle Contacts for Custom PCB Mounting

TriPaddle 96 Position PCB Adapters

Module Specifications

Current Rating	3 amp @ 150 volts RMS
Temperature	–55° C to 125° C
Termination Resistance	50 mΩ typical
Insulation Resistance	1000 MΩ
Dielectric Withstanding Voltage (DWV)	500 volts RMS min.
Connector 1	96 pin male din connector
Module Positions Needed	1

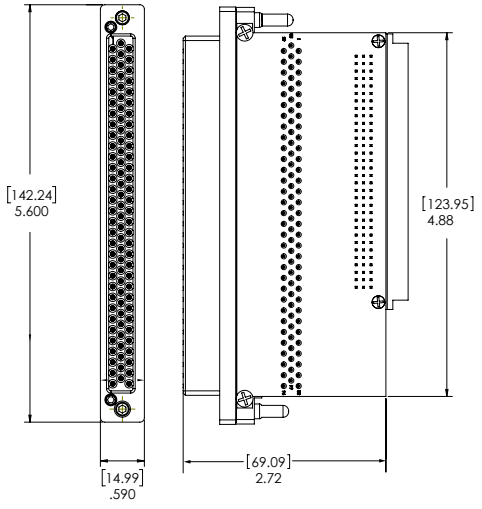

Receiver • Part # 510 104 139

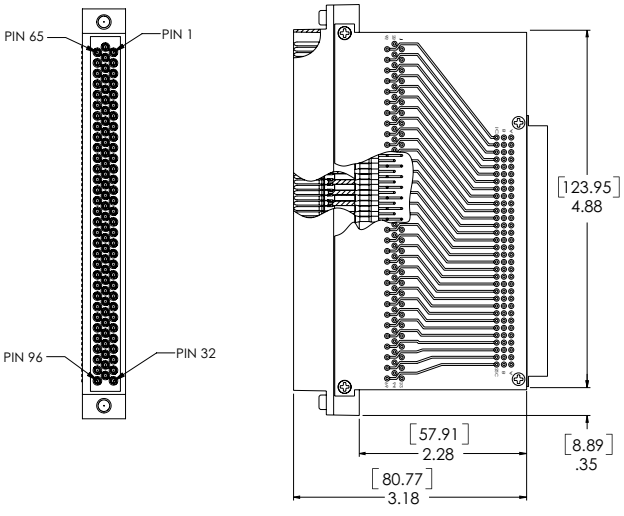

ITA • Part # 510 108 148

Part #	Description

96 POSITION RECEIVER PCB ADAPTER

510 104 139 PCB Adapter, Receiver, TriPaddle, 96 Position, to PCB-Mounted 1x96 Male DIN 41612 Connector

96 POSITION ITA PCB ADAPTER

510 108 148 PCB Adapter, ITA, TriPaddle, 96 Position, to PCB-Mounted 1x96 Male DIN 41612 Connector

** For PCB Layout information, refer to PCB Adapter customer drawing online at vpc.com*

** Custom cable assemblies for specific PXI and VXI instrumentation are available at vpc.com/wire*

TriPaddle 96 Position Right Angle Contact Modules

Module Specifications

Receiver and ITA Material	Black PPS
Temperature	Operating • −55° C to 125° C Non-operating • −65° C to 220° C
Available Contact Positions	96
Module Positions Needed	1

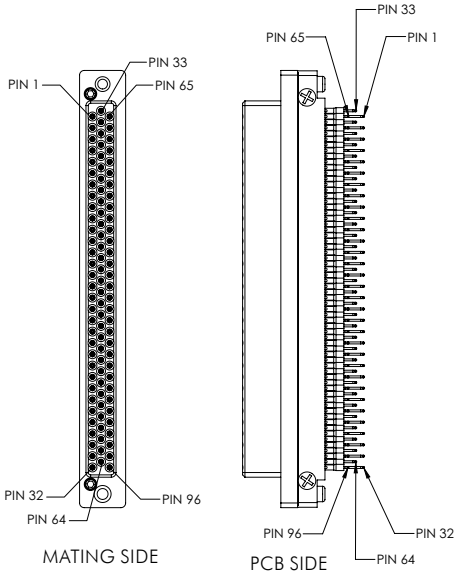

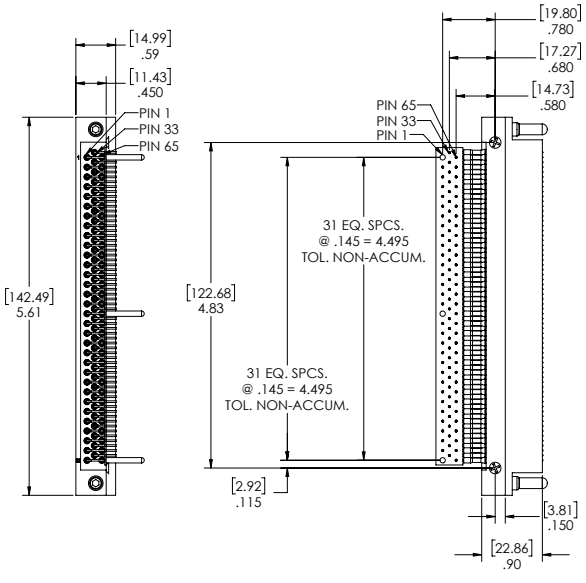

Receiver • Part # 510 104 135 | **ITA • Part # 510 108 125**

Part #	Description

96 POSITION RECEIVER RIGHT ANGLE CONTACT MODULE

510 104 135 Signal Module, Receiver, TriPaddle, 96 Position with Right Angle Contacts for Custom PCB Mounting

96 POSITION ITA RIGHT ANGLE CONTACT MODULE

510 108 125 Signal Module, ITA, TriPaddle, 96 Position with Right Angle Contacts for Custom PCB Mounting

Mini Power Patchcords, Contacts and Tools

Contact Specifications

Operating Current	65 amp max. continuous • 8 AWG 40 amp max. continuous • 12 AWG 30 amp max. continuous • 14 AWG 25 amp max. continuous • 16 AWG
Contact Resistance	1 mΩ max.
Mating Force	5.7 lbs max. [2.58 kg]
Dielectric Withstanding Voltage (DWV)	1500 VDC min.
Insulation Resistance	1000 MΩ min.
Contact Body Material	Female (RCV) – brass Male (ITA) – BeCu
Contact Plating	50μ" Au over 100μ" Ni
Cycle Life	20,000 cycles

Receiver Contact
Part # 610 116 112

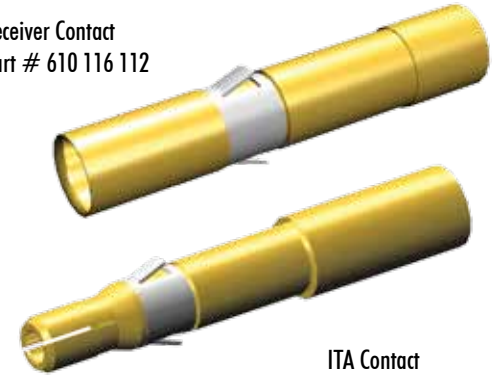

ITA Contact
Part # 610 115 124

Mini Power Contact
610 116 112 / 610 115 124
T-Rise Test

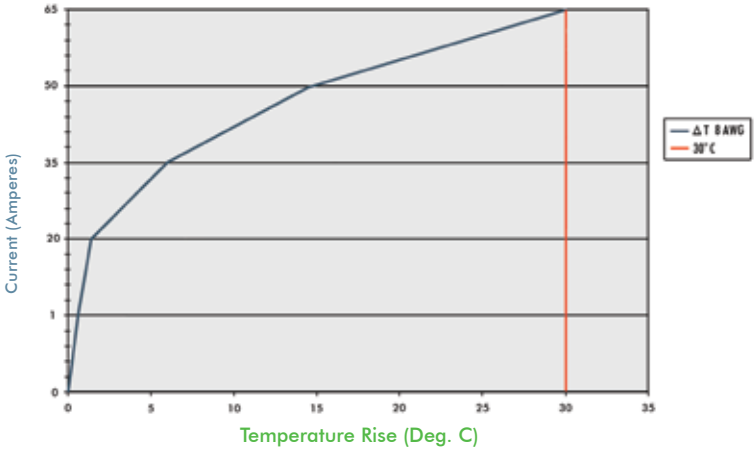

Mini Power Receiver Patchcord	Mini Power ITA Patchcord

Part #	Description	Used in Module
MINI POWER RECEIVER CONTACT		
610 116 112	Mini Power Contact, Receiver, 8 AWG (max.), 50μ" Gold	510 104 123/206 510 160 102/103/104
MINI POWER ITA CONTACTS		
610 115 124	Mini Power Contact, ITA, 8 AWG (max.), 50μ" Gold	510 108 115/178 510 161 102/103/104
610 115 125	Mini Power Contact, ITA, 8 AWG (max.), 30μ" Gold	510 108 115/178 510 161 102/103/104
MINI POWER RECEIVER AND ITA PATCHCORDS		
7-232 912 000-036	Mini Power Patchcord, Receiver, 40 Amp, 36", 12 AWG, White Wire, Single Ended	510 104 123/206 510 160 102/103/104
7-231 912 000-036	Mini Power Patchcord, ITA, 40 Amp, 36", 12 AWG, White Wire, Single Ended	510 108 115/178 510 160 102/103/104
EXTRACTION TOOL		
910 112 104	Tool, Extraction, Mini Power/Mini Coaxial/Mini Pneumatic Contacts, Receiver and ITA	

** To instantly design patchcords online, use our Patchcord Designer at vpc.com/patchcorddesigner.*

19 Position Mini Power Modules

Module Specifications

Material	Ryton R-7
Temperature	Operating • −55° C to 125° C Non-operating • −55° C to 140° C
Dielectric Withstanding Voltage (DWV)	1500 VDC min.
Available Contact Positions	19
Module Positions Needed	1

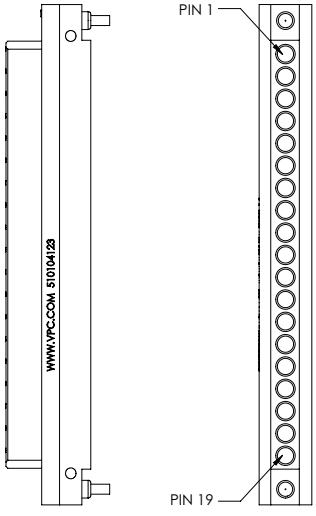

WIRING SIDE

Receiver • Part # 510 104 123

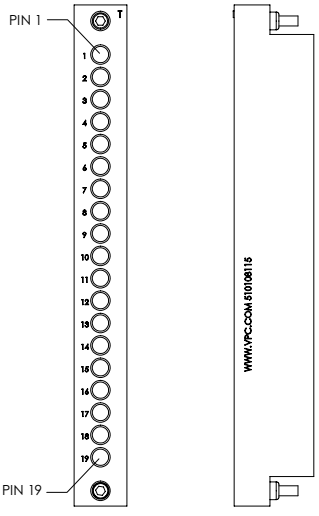

WIRING SIDE

ITA • Part # 510 108 115

Part #	Description	Contacts Used
MINI POWER RECEIVER MODULES AND STRAIN RELIEFS		
510 104 123	Mini Power Module, Receiver, 19 Position	610 116 112
510 109 116	Strain Relief Plate for Select Receiver Modules	
MINI POWER ITA MODULES AND STRAIN RELIEFS		
510 108 115	Mini Power Module, ITA, 19 Position	610 115124/125
510 109 296	Strain Relief Plate for ITA Modules	

16/16 Position TriPaddle Signal/Mini Power Modules

Module Specifications

Material	Ryton R-7
Temperature	Operating • –55° C to 125° C Non-operating • –65° C to 225°C
Dielectric Withstanding Voltage (DWV)	1500 VDC Min.
Available Contact Positions	16 Signal, 16 Mini Power
Module Positions Needed	1

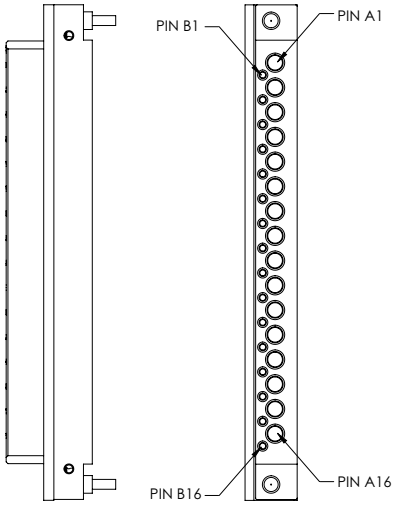

WIRING SIDE

Receiver • Part # 510 104 206

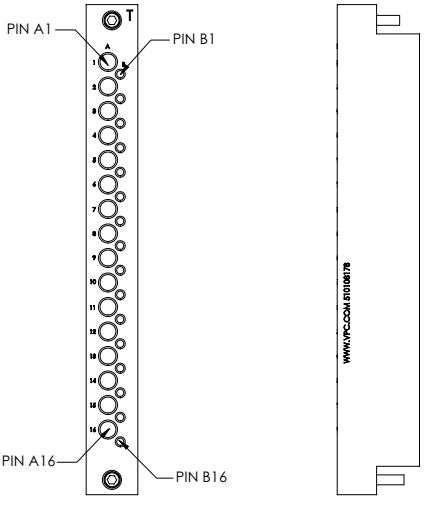

WIRING SIDE

ITA • Part # 510 108 178

Part #	Description	Contacts Used	
TRIPADDLE SIGNAL/MINI POWER RECEIVER MODULES AND STRAIN RELIEFS		TRIPADDLE	MINI POWER
510 104 206	TriPaddle Signal/Mini Power Module, Receiver, 16/16 Position	610 110 101/ 128/167/ 177/179	610 116 112
510 109 116	Strain Relief Plate for Select Receiver Modules		
TRIPADDLE SIGNAL/MINI POWER ITA MODULES AND STRAIN RELIEFS		TRIPADDLE	MINI POWER
510 108 178	TriPaddle Signal/Mini Power Module, ITA, 16/16 Position	610 110 108/ 113/129/169	610 115 124/125
510 109 296	Strain Relief Plate for ITA Modules		

50 Ohm Mini Coaxial Patchcords and Contacts

Contact Specifications

Characteristic Impedance	50 Ω
Frequency Range	DC to 1 GHz
Insertion Loss	1.2 dB @ 1 GHz 1.02 dB @ 500 Mhz
VSWR	≤ 1.06 @ 1 GHz
Operating Current	0.5 amps max. continuous
Contact Resistance	5 mΩ max.
Mating Force	1.5 lbs max. [.68 kg]
Dielectric Withstanding Voltage (DWV)	1500 VDC min.
Insulation Resistance	1000 MΩ min.
Contact Body	Shield – brass Center conductor – BeCu
Contact Plating	Shield – 30μ" Au over 100μ" Ni Shield (610 103 115/130/136) – 30μ" Au over 100μ" Ni Center conductor – 60μ" Au over 100μ" Ni
Cycle Life	20,000 cycles

ITA Contact
Part # 610 103 115

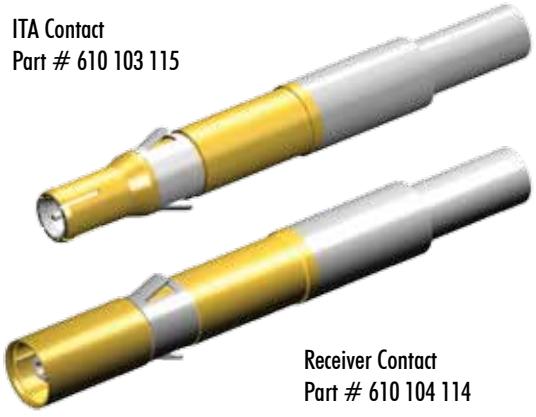

Receiver Contact
Part # 610 104 114

Mini Coaxial RF Response
50 Ohm impedance
RG316 & 178 style de-embedded cable (contact only)

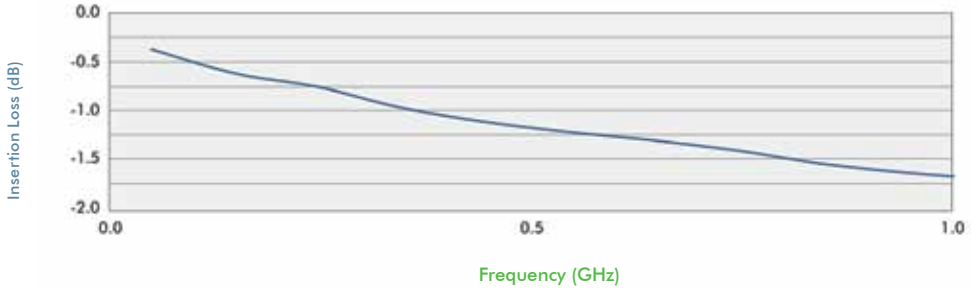

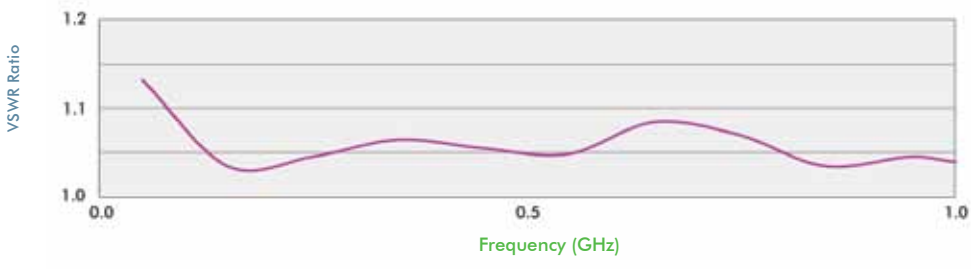

50 Ohm Mini Coaxial Patchcords and Contacts

Mini Coaxial Receiver Patchcord	Mini Coaxial ITA Patchcord

Part #	Description	Used in Module
MINI COAXIAL RECEIVER CONTACTS		
610 104 114	Mini Coaxial Contact, Receiver, RG316	510 104 120/150/243/301 510 160 102/103/104
610 104 140	Mini Coaxial Contact, Receiver, with Two .025" Square Posts for Wire Wrap	510 104 120/150/243 510 160 102/103/104
610 104 141	Mini Coaxial Contact, Receiver, RG178	510 104 120/150/243/301 510 160 102/103/104
610 104 160	Mini Coaxial Contact, Receiver, Right Angle Posts for PCB Mount	510 104 280
610 104 149	Mini Coaxial Contact, Receiver, RG316 Double Shield	510 104 120/150/243 510 160 102/103/104
MINI COAXIAL ITA CONTACTS		
610 103 115	Mini Coaxial Contact, ITA, RG316	510 108 111/132/210/276 510 161 102/103/104
610 103 129	Mini Coaxial Contact, ITA, with Two .025" Square Posts for Wire Wrap	510 108 111/132/210 510 161 102/103/104
610 103 130	Mini Coaxial Contact, ITA, RG178	510 108 111/132/210/276 510 161 102/103/104
610 103 136	Mini Coaxial Contact, ITA, 24 AWG	510 108 111/132/210/276 510 161 102/103/104
610 103 150	Mini Coaxial Contact, ITA, with One .025" Round Post and One .02" square post, .075" Spacing	510 108 111/132/210 510 161 102/103/104
610 103 152	Mini Coaxial Contact, ITA, RG316 Double Shield	510 108 111/132/210 510 161 102/103/104
610 103 161	Mini Coaxial Contact, ITA, 24 & 26 AWG Twisted Pair	510 108 111/132/210/276 510 161 102/103/104
610 103 172	Mini Coaxial Contact, ITA, 22 AWG	510 108 111/132/210/276 510 161 102/103/104
610 103 184	Mini Coaxial Contact, ITA, 22 AWG, Twisted Pair	510 108 111/132/210 510 161 102/132/210
MINI COAXIAL RECEIVER AND ITA PATCHCORDS		
7-332 116 000-036	Coaxial, Patchcord, Receiver, Mini Coaxial, 50 Ohm, 36", RG316 Tan, Single Ended	510 104 120/150/243/301 510 160 102/103/104
7-334 178 000-036	Coaxial, Patchcord, Receiver, Mini Coaxial, 50 Ohm, 36", RG178 Tan, Single Ended	510 104 120/150/243/301 510 160 102/103/104
7-331 116 000-036	Coaxial, Patchcord, ITA, Mini Coaxial, 50 Ohm, 36", RG316 Tan, Single Ended	510 108 111/132/210/276 510 161 102/103/104
7-333 178 000-036	Coaxial, Patchcord, ITA, Mini Coaxial, 50 Ohm, 36", RG178 Tan, Single Ended	510 108 111/132/210/276 510 161 102/103/104
7-335 924 000-036	Coaxial, Patchcord, ITA, Mini Coaxial, 50 Ohm, 36", 24 AWG, Single Ended	510 108 111/132/210/276 510 161 102/103/104

** To instantly design patchcords online, use our Patchcord Designer at vpc.com/patchcorddesigner.*

50 Ohm Mini Coaxial Solder Sleeve Patchcords and Contacts

Contact Specifications

Characteristic Impedance	50 Ω
Frequency Range	DC to 2 GHz
Insertion Loss	.05 dB @ 500 Mhz ≥ −0.3 dB @ 2 GHz
VSWR	≤ 1.2 @ 2 GHz
Operating Current	.5 amp max. continuous
Contact Resistance	5 mΩ max.
Mating Force	1.5 lbs max. [.68 kg]
Dielectric Withstanding Voltage (DWV)	1500 VDC min.
Insulation Resistance	1000 MΩ min.
Contact Body	Shield – brass Center Conductor – BeCu
Contact Plating	Shield – RCV • 30μ" Au over 100μ" Ni ITA • 50μ" Au over 100μ" Ni Center conductor – 60μ" Au over 100μ" Ni
Cycle Life	20,000 cycles

Receiver Contact
Part # 610 104 142

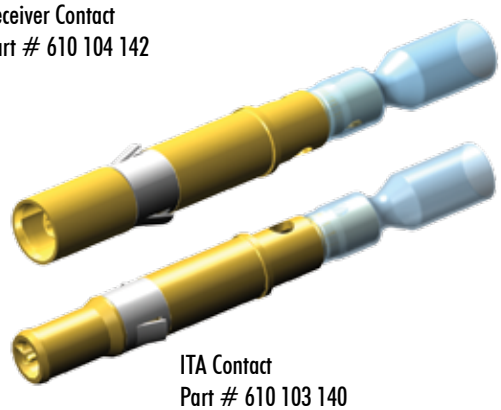

ITA Contact
Part # 610 103 140

Mini Coaxial Solder Sleeve RF Response
50 Ohm impedance
RG316 & 178 style de-embedded cable (contact only)

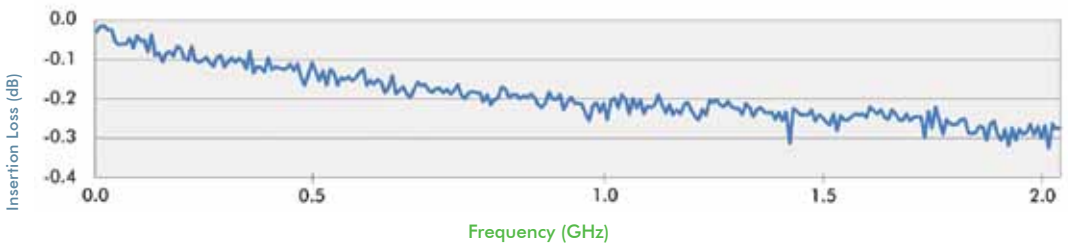

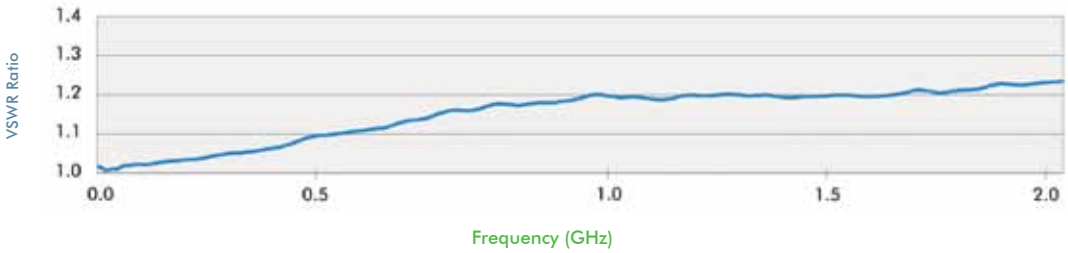

Part #	Description	Used in Module
50 OHM MINI COAX SOLDER SLEEVE RECEIVER CONTACT		
610 104 142	Mini Coaxial Contact, Receiver, Solder Sleeve, RG316 & RG178	510 104 120/150/243 510 160 102/103/104
50 OHM MINI COAX SOLDER SLEEVE ITA CONTACT		
610 103 140	Mini Coaxial Contact, ITA, Solder Sleeve, RG316 & RG178	510 108 111/132/210 510 161 102/103/104

Mini Coaxial Solder Sleeve Patchcords and Mini Coaxial Tools

Mini Coaxial Solder Sleeve Receiver Patchcord

Mini Coaxial Solder Sleeve ITA Patchcord

Part #	Description	Used in Module
50 OHM MINI COAX SOLDER SLEEVE RECEIVER AND ITA PATCHCORDS		
7-338 116 000-036	Mini Coaxial Solder Sleeve Patchcord, Receiver, 50 Ohm, 36", RG316, Single Ended	510 104 120/150/243 510 160 102/103/104
7-338 178 000-036	Mini Coaxial Solder Sleeve Patchcord, Receiver, 50 Ohm, 36", RG178, Single Ended	510 104 120/150/243 510 160 102/103/104
7-339 116 000-036	Mini Coaxial Solder Sleeve Patchcord, ITA, 50 Ohm, 36", RG316, Single Ended	510 108 111/132/243 510 161 102/103/104
7-339 178 000-036	Mini Coaxial Solder Sleeve Patchcord, ITA, 50 Ohm, 36", RG178, Single Ended	510 108 111/132/243 510 161 102/103/104

** To instantly design patchcords online, use our Patchcord Designer at vpc.com/patchcorddesigner.*

Part #	Description	Used on Contact
CRIMP TOOLS		
910 101 115	Tool, Crimp, Coaxial Contacts	610 103 115/130/152/157/161 610 104 114/141/149
910 101 118	Tool, Crimp, Coaxial Contacts, ITA, 24 AWG Wire	610 103 136/161/172/184
LOCATOR		
910 104 128	Tool, Locator, Coaxial Contacts, 24 AWG Wire	610 103 136/161/172/184
EXTRACTION TOOL		
910 112 104	Tool, Extraction, Mini Power/Mini Coaxial/Mini Pneumatic Contacts, Receiver and ITA	610 103 115/129/130 610 103 136/140/150/152/161/172 610 104 114/140/141/142/149
MINI COAXIAL FORMING TOOLS		
910 121 119	Tool, Center Conductor Forming, Mini Coaxial, Receiver (used before assembly)	610 104 114/141
910 121 126	Tool, Outer Shield Conductor Forming, Mini Coaxial, ITA	610 103 115/129/130/136 610 103 140/150/152/161
910 121 142	Tool, Outer Shield Conductor Expanding, Mini Coaxial, ITA	610 103 115/129/130/136 610 103 140/150/152/161
910 121 143	Tool, Center Conductor Enlarging, Mini Coaxial, Receiver	610 104 114/141/149
MINI COAXIAL INSPECTION TOOLS		
910 121 131	Tool, Weight Gage Kit, Mini Coaxial, Receiver	610 104 114/140/141/142/149
910 121 155	Tool, Weight Gage Kit, Mini Coaxial, ITA	610 103 115/129/130/136/140 610 103 150/152/161
910 121 156	Tool, Inspection Depth Gauge, Mini Coaxial, Receiver	610 104 114/140/141/142/149
910 121 157	Tool, Inspection Depth Gauge, Mini Coaxial, ITA	610 103 115/129/130/136 610 103 140/150/152/161
MISCELLANEOUS TOOLS		
910 121 144	Tool, Solder Kit, Mini Coaxial Contacts with Solder Sleeve (includes Raychem Holding Fixture AD-1319)	610 103 140/158 610 104 142
910 121 149	Tool, Adapter for Raychem Holding Fixture (AD-1319-29)	610 103 140/158 610 104 142
910 121 160	Tool, Steinel Heat Gun with Nozzle – 110V	610 103 140/158 610 104 142
910 121 167	Tool, Steinel Heat Gun with Nozzle – 220V	610 103 140/158 610 104 142

8/8 Position TriPaddle/Mini Power and Mini Coaxial Module Inserts

Specifications

Material	G10 epoxy glass
Operating Temperature	-40°C to 125°C
Dielectric Withstanding Voltage (DWV)	1500 VDC min.
Available Contact Positions	8/8
Module Positions Needed	1

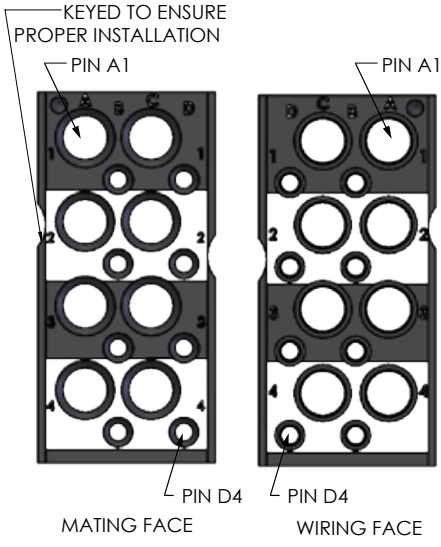

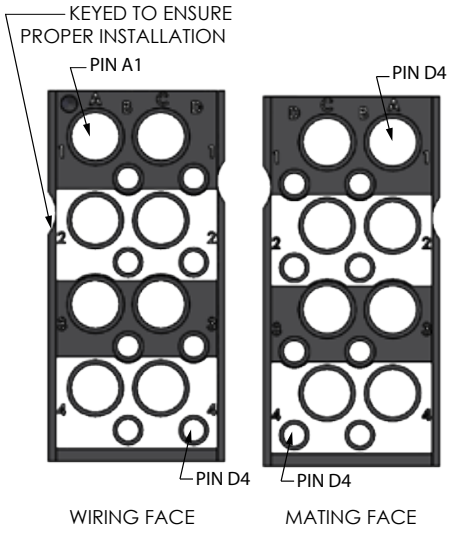

Receiver • **Part # 510 143 005** ITA • **Part # 510 144 005**

Part #	Description	Contacts Used		
I2 MX RECEIVER TRIPADDLE SIGNAL/MINI POWER AND MINI COAXIAL MODULE INSERT		TRIPADDLE	MINI POWER	MICRO COAX
510 143 005	TriPaddle Signal/Mini Power and Mini Coax, Module Insert, Receiver, i2 MX, 8/8 Position	610 110 101 610 110 177 610 110 128 610 110 167	610 116 112	610 104 114 610 104 140 610 104 141
I2 MX ITA TRIPADDLE SIGNAL/MINI POWER AND MINI COAXIAL MODULE INSERT		TRIPADDLE	MINI POWER	MICRO COAX
510 144 005	TriPaddle Signal/Mini Power and Mini Coax, Module Insert, ITA, i2 MX, 8/8 Position	610 110 108 610 110 129 610 110 169	610 115 124 610 115 125	610 103 115 610 103 130 610 103 136 610 103 161

24 Position Mini Power and Mini Coaxial Modules

Module Specifications

Material	Black high-temp thermoplastic
Temperature	Operating • -55° C to 125° C Non-operating • -65° C to 220° C
Dielectric Withstanding Voltage (DWV)	1500 VDC
Available Contact Positions	24
Module Positions Needed	1

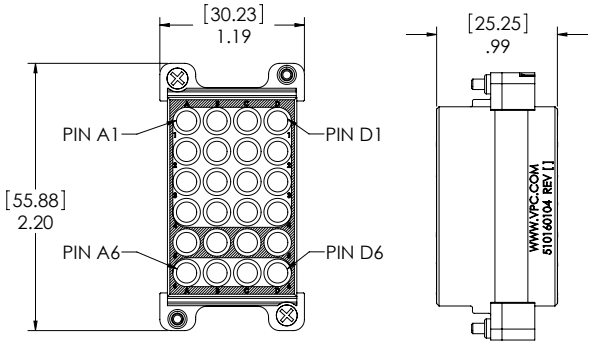

MATING SIDE

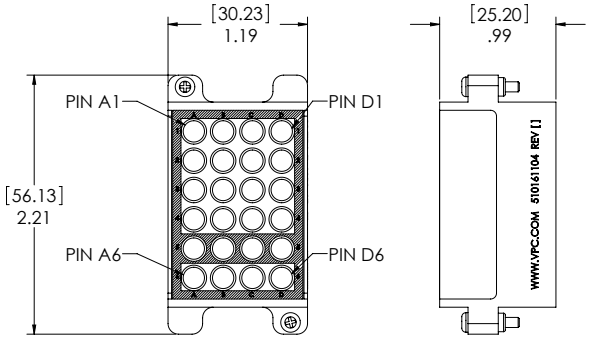

WIRING SIDE

Receiver • Part # 510 160 104 | **ITA • Part # 510 161 104**

Part #	Description	Contacts Used	
		MINI POWER	MINI COAX
ICON RECEIVER MINI POWER AND MINI COAXIAL MODULE			
510 160 104	Mini Power and Mini Coaxial Module, Receiver, iCon, 24 Position	610 116 112	610 104 114 610 104 140 610 104 141 610 104 142 610 104 149
ICON ITA MINI POWER AND MINI COAXIAL MODULE			
510 161 104	Mini Power and Mini Coaxial Module, ITA, iCon, 24 Position	610 115 124 610 115 125	610 103 115 610 103 129 610 103 130 610 103 136 610 103 140 610 103 150 610 103 152 610 103 161 610 103 172 610 103 189

NOTE: Mini Pneumatic contacts (610 132 106 and 610 131 108) and Fiber Optic patchcords can be used with these modules.

NOTE: Refer to User's Manual for power applications with this module.

100/8 QuadraPaddle/Mini Power and Mini Coaxial Modules

Module Specifications

Material	Black high-temp thermoplastic
Temperature	Operating • -55° C to 125° C Non-operating • -65° C to 220° C
Dielectric Withstanding Voltage (DWV)	1500 VDC min.
Available Contact Positions	100/8
Module Positions Needed	1

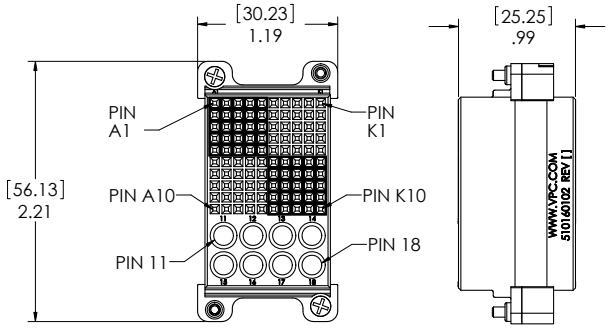

MATING SIDE

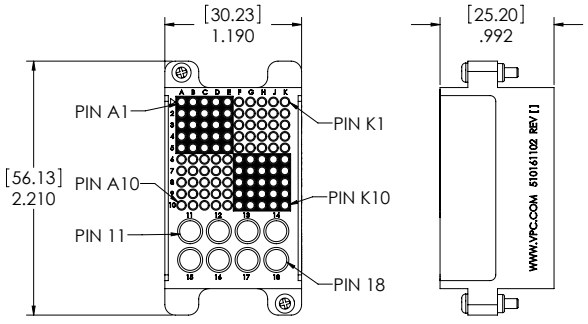

WIRING SIDE

Receiver • Part # 510 160 102

ITA • Part # 510 161 102

Part #	Description	Contacts Used		
		QUADRAPADDLE	MINI POWER	MINI COAX
ICON RECEIVER QUADRAPADDLE/MINI POWER AND MINI COAXIAL MODULE				
510 160 102	QuadraPaddle Signal/Mini Power and Mini Coaxial Module, Receiver, iCon, 100/8 Position	610 138 216	610 116 112	610 104 114 610 104 140 610 104 141 610 104 142 610 104 149
ICON ITA QUADRAPADDLE/MINI POWER AND MINI COAXIAL MODULE				
510 161 102	QuadraPaddle Signal/Mini Power and Mini Coaxial Module, ITA, iCon, 100/8 Position	610 138 109 610 138 122 610 138 112 610 138 115	610 115 124 610 115 125	610 103 115 610 103 129 610 103 130 610 103 136 610 103 140 610 103 150 610 103 152 610 103 161 610 103 172 610 103 184

NOTE: Mini Pneumatic contacts (610 132 106 and 610 131 108) and Fiber Optic patchcords can be used with these modules.

64/8 TriPaddle Signal/Mini Power and Mini Coaxial Modules

Module Specifications

Material	Black high-temp thermoplastic
ITA Material	Black filled black thermoplastic
Temperature	Operating • -55° C to 125° C Non-operating • -65° C to 220° C
ITA Temperature	Operating • -55° C to 125° C Non-operating • -55° C to 140° C
Dielectric Withstanding Voltage (DWV)	1500 VDC min.
Available Contact Positions	64/8
Module Positions Needed	1

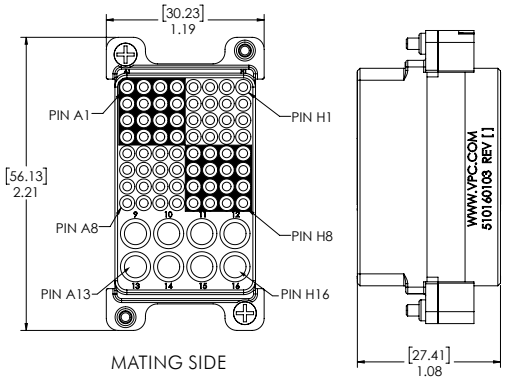

MATING SIDE

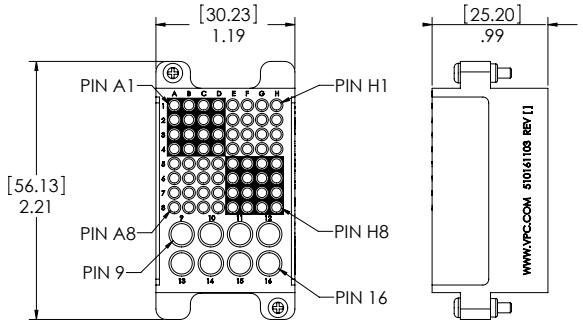

WIRING SIDE

Receiver • Part # 510 160 103

ITA • Part # 510 161 103

Part #	Description	Contacts Used		
		TRIPADDLE	MINI POWER	MINI COAX
ICON RECEIVER TRIPADDLE SIGNAL/MINI POWER AND MINI COAXIAL MODULE				
510 160 103	TriPaddle Signal/Mini Power and Mini Coaxial Module, Receiver, iCon, 64/8 Position	610 110 101 610 110 128 610 110 167 610 110 177 610 110 179	610 116 112	610 104 114 610 104 140 610 104 141 610 104 142 610 104 149
ICON ITA TRIPADDLE SIGNAL/MINI POWER AND MINI COAXIAL MODULE				
510 161 103	TriPaddle Signal/Mini Power and Mini Coaxial Module, ITA, iCon, 64/8 Position	610 110 108 610 110 113 610 110 129 610 110 169	610 115 124 610 115 125	610 103 115 610 103 129 610 103 130 610 103 136 610 103 140 610 103 150 610 103 152 610 103 161 610 103 172 610 103 184

NOTE: Mini Pneumatic contacts (610 132 106 and 610 131 108) and Fiber Optic patchcords can be used with these modules.

19 Position Mini Coaxial Modules

Module Specifications

Material	Black PPS
Temperature	Operating • –55° C to 125° C Non-operating • –65° C to 225° C
Dielectric Withstanding Voltage (DWV)	1500 VDC min.
Available Contact Positions	19
Module Positions Needed	1

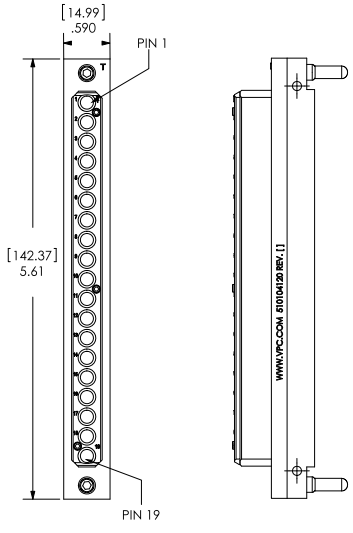

Receiver • Part # 510 104 120

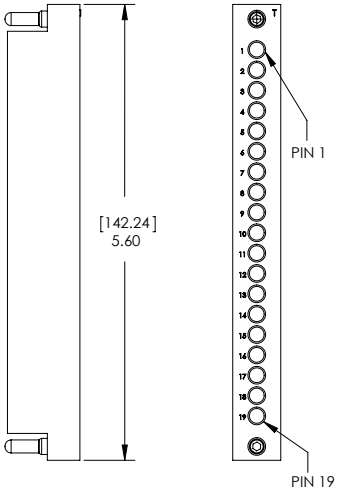

ITA • Part # 510 108 111

Part #	Description	Contacts Used
MINI COAXIAL RECEIVER MODULES AND STRAIN RELIEFS		
510 104 120	Mini Coaxial Module, Receiver, 19 Position	610 104 114/140/141/142/149
510 109 116	Strain Relief Plate for Select Receiver Modules	
MINI COAXIAL ITA MODULES AND STRAIN RELIEFS		
510 108 111	Mini Coaxial Module, ITA, 19 Position	610 103 115/129/130/136/140/150/152/161/172/184
510 109 296	Strain Relief Plate for ITA Modules	

NOTE: Mini Pneumatic contacts (610 132 106 and 610 131 108) and Fiber Optic patchcords can be used with these modules.

37 Position Mini Coaxial Modules

Module Specifications

Receiver Material	G10 epoxy glass
Receiver Temperature	Operating • −55° C to 125° C Non-operating • −55° C to 140° C
ITA Material	G10 epoxy glass
ITA Temperature	Operating • −55° C to 125° C Non-operating • −55° C to 140° C
Dielectric Withstanding Voltage (DWV)	1500 VDC min.
Available Contact Positions	37
Module Positions Needed	1

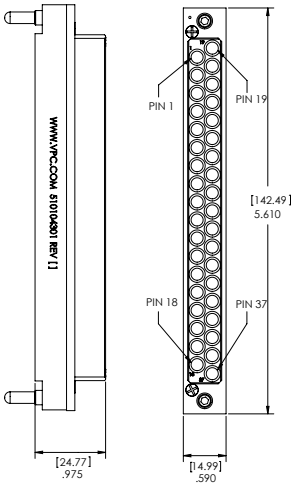

Receiver • Part # 510 104 301

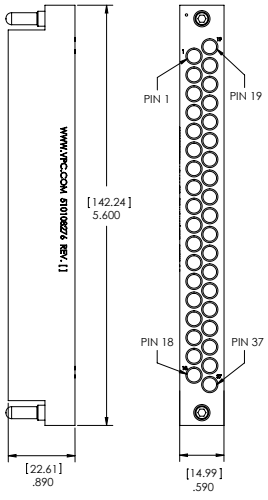

ITA • Part # 510 108 276

Part #	Description	Contacts Used
MINI COAXIAL RECEIVER MODULES AND STRAIN RELIEFS		
510 104 301	Mini Coaxial Module, Receiver, 37 Position	610 104 114/141
510 109 298	Strain Relief Plate for Select Receiver Modules	
MINI COAXIAL ITA MODULES AND STRAIN RELIEFS		
510 108 276	Mini Coaxial Module, ITA, 37 Position	610 103 115/130/136/161/172/184
510 109 296	Strain Relief Plate for ITA Modules	

NOTE: It is not recommended to use Mini Power contacts in a Mini Coax module, which can create performance issues and potentially damage contacts.

NOTE: Fiber Optic patchcords can be used with these modules.

76 Position Mini Coaxial Modules

Module Specifications

Material	Black PPS
Temperature	Operating • −55° C to 125° C Non-operating • −65° C to 225° C
Dielectric Withstanding Voltage (DWV)	1500 VDC min.
Available Contact Positions	76
Module Positions Needed	2

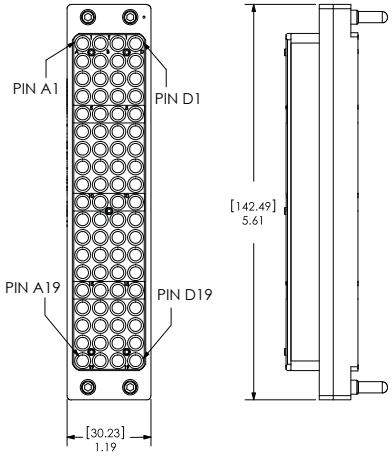

Receiver • Part # 510 104 150

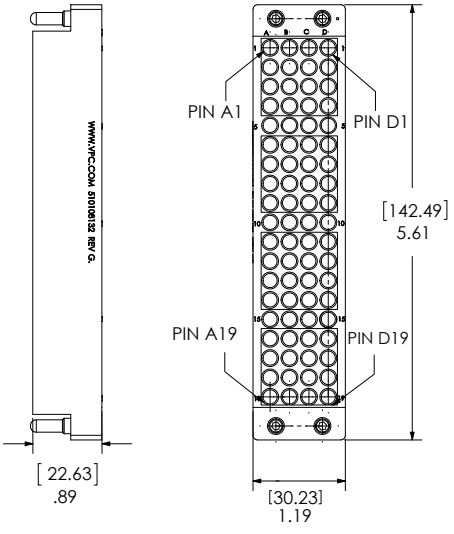

ITA • Part # 510 108 132

Part #	Description	Contacts Used
MINI COAXIAL RECEIVER MODULES AND STRAIN RELIEFS		
510 104 150	Mini Coaxial Module, Receiver, 76 Position	610 104 114/140/141/142/149
510 109 298	Strain Relief Plate for Select Receiver Modules	
MINI COAXIAL ITA MODULES AND STRAIN RELIEFS		
510 108 132	Mini Coaxial Module, ITA, 76 Position	610 103 115/129/130/136/140/150/152/161/172/184
510 109 296	Strain Relief Plate for ITA Modules	

NOTE: Mini Pneumatic contacts (610 132 106 and 610 131 108) and Fiber Optic patchcords can be used with these modules.

16/16 Position TriPaddle Signal/Mini Coaxial Modules

Module Specifications

Material	Black PPS
Temperature	Operating • –55° C to 125° C Non-operating • –65° C to 220° C
Dielectric Withstanding Voltage (DWV)	1500 VDC min.
Available Contact Positions	16 signal, 16 Mini Coax
Module Positions Needed	1

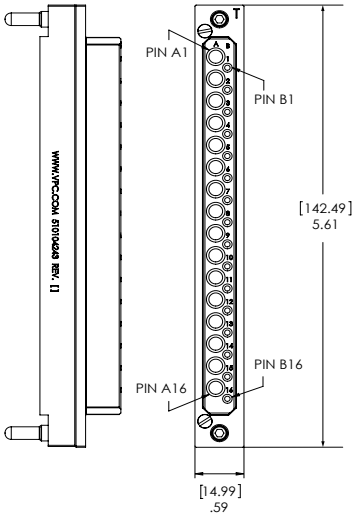

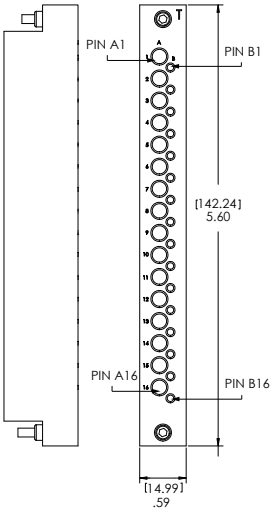

Receiver • Part # 510 104 243 | ITA • Part # 510 108 210

Part #	Description	Contacts Used
TRIPADDLE SIGNAL/MINI COAXIAL RECEIVER MODULES AND STRAIN RELIEFS		
510 104 243	TriPaddle Signal/Mini Coax Module, Receiver, 16/16 Position	610 104 114/140/141/142/149 610 110 101/104/128/167/177/179
510 109 116	Strain Relief Plate for Select Receiver Modules	
TRIPADDLE SIGNAL/MINI COAXIAL ITA MODULES AND STRAIN RELIEFS		
510 108 210	TriPaddle Signal/Mini Coax Module, ITA, 16/16 Position	610 103 115/129/130/136/140/150/152/161/172/184 610 110 108/113/129/169
510 109 296	Strain Relief Plate for ITA Modules	

Right Angle Mini Coaxial Contact and Module

Contact Specifications

Characteristic Impedance	50 Ω
Frequency Range	DC to 1 GHz
Insertion Loss	−0.885 dB @ 1 GHz
VSWR	1.445 @ 1 GHz
Operating Voltage and Current	0.5 amps max. continuous
Contact Resistance	5 mΩ max.
Mating Force	1.5 lbs max. [.68 kg]
Dielectric Withstanding Voltage (DWV)	1500 VDC min.
Insulation Resistance	1000 MΩ min.
Contact Body Material	Shield - brass Center Conductor - BeCu
Contact Plating	Shield - 50μ" Au over 100μ" Ni Center Conductor - 60μ" Au over 100μ" Ni
Cycle Life	20,000 cycles

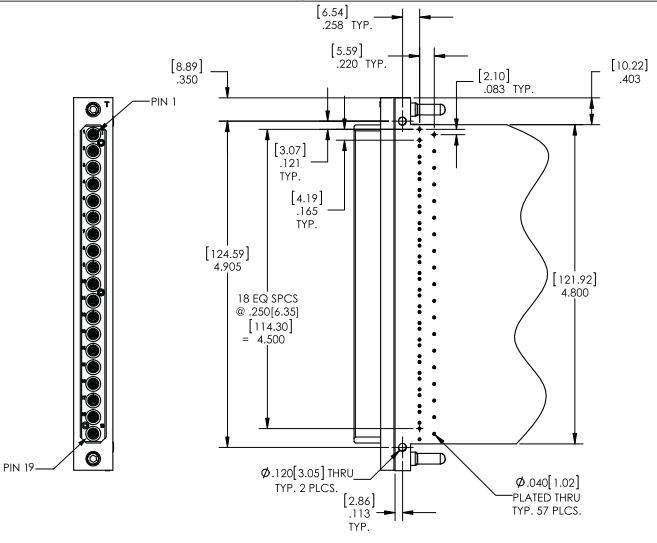

MATING SIDE PCB SIDE

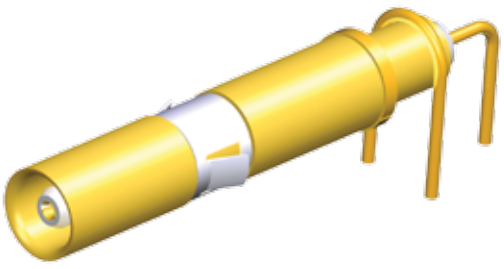

Right Angle Mini Coaxial Receiver Contact
Part # 610 104 160

19 Position Right Angle Coaxial Module (Customer Supplied PCB)
Part # 510 104 280

Part #	Description	Used in Module
RIGHT ANGLE MINI COAXIAL CONTACT		
610 104 160	Mini Coaxial Contact, Receiver, Right Angle Posts for PCB Mount	510 104 280
MINI COAXIAL MODULE		
510 104 280	Mini Coaxial Module, Receiver, 19 Positions, Loaded with Right Angle Contacts (610 104 160)	

Micro Power Contacts and Patchcords

Contact Specifications

Operating Current	21 amp continuous
Contact Resistance	1.5 mΩ max.
Mating Force	2.0 lbs max. [.91 kg]
Dielectric Withstanding Voltage (DWV)	1500 VDC min.
Contact Body Material	Brass
Contact Plating	30μ" Au over 100μ" Ni
Cycle Life	10,000 cycles

ITA Contact
Part # 610 143 101

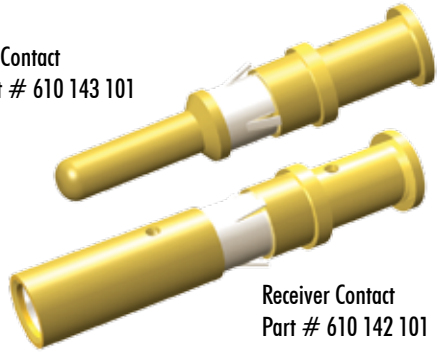

Receiver Contact
Part # 610 142 101

Micro Power Contact 610 142 101/610 143 101
T-Rise Test (12 AWG)

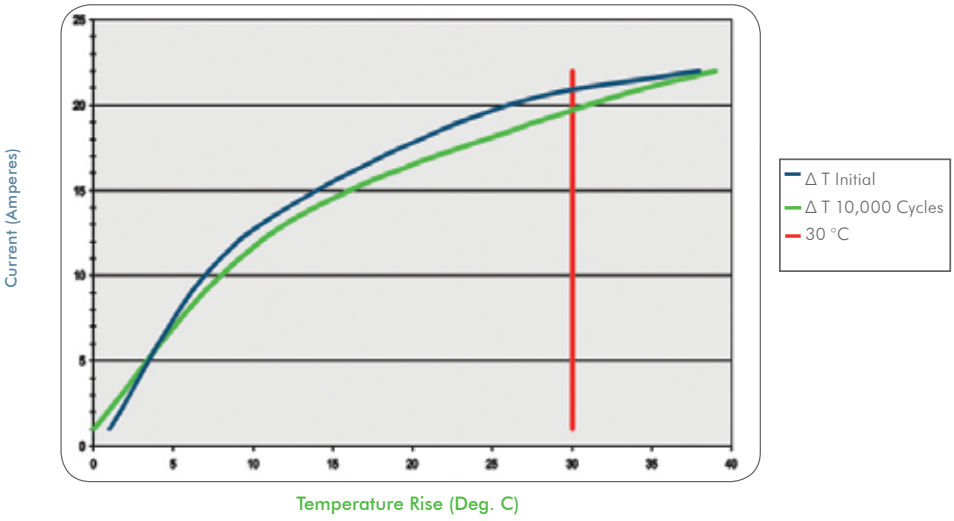

Part #	Description	Used in Module
MICRO POWER RECEIVER CONTACTS		
610 142 101	Micro Power Contact, Receiver, 12-14 AWG, Crimp	510 104 267/270/306 510 160 106/107/111/112/113
610 142 102	Micro Power Contact, Receiver, PCB Mount	510 104 267/270/306 510 160 106/107/111/112/113
MICRO POWER ITA CONTACTS		
610 143 101	Micro Power Contact, ITA, 12-14 AWG, Crimp	510 108 262/263 510 161 106/107/111
MICRO POWER RECEIVER AND ITA PATCHCORDS		
7-252 912 000-036	Power Patchcord, Receiver, Micro Power, 36", 12 AWG White, Single Ended	510 104 267/270/306 510 160 106/107/111/112/113
7-251 912 000-036	Power Patchcord, ITA, Micro Power, 36", 12 AWG White, Single Ended	510 108 262/263 510 161 106/107/111

** To instantly design patchcords online, use our Patchcord Designer at vpc.com/patchcorddesigner.*

CRIMP TOOLS

910 101 102	Tool, Crimp, 10 Amp TriPaddle, Thermocouple, Micro Power, Receiver and ITA, Locator Required
910 104 144	Tool, Locator, Micro Power, ITA
910 104 145	Tool, Locator, Micro Power, Receiver

EXTRACTION TOOL

910 112 123	Tool, Extraction, Micro Power/Micro Coaxial Contacts

Micro Coaxial Contacts and Patchcords

Contact Specifications

Characteristic Impedance	50 Ω 75 Ω • for RG179 50 Ω • for RG316 double shield
Frequency Range	DC – 3 GHz • 50 Ω DC – 2 GHz • for RG179 DC – 10.5 GHz • for RG316 double shield
Contact Isolation	–90 dB minimum
VSWR	1.22 @ 3 GHz • 50 Ω 1.39 @ 2 GHz • for RG179 1.0225 +.05 f(GHz) • for RG316 double shield
Mating Force	1.5 lbs max. [.68 kg]
Insertion Loss	– √f(GHz) x .06 dB
Dielectric Withstanding Voltage (DWV)	800 volts RMS
Contact Plating	50μ" Au over 100μ" Ni
Cycle Life	10,000 cycles

ITA Contact
Part # 610 141 XXX

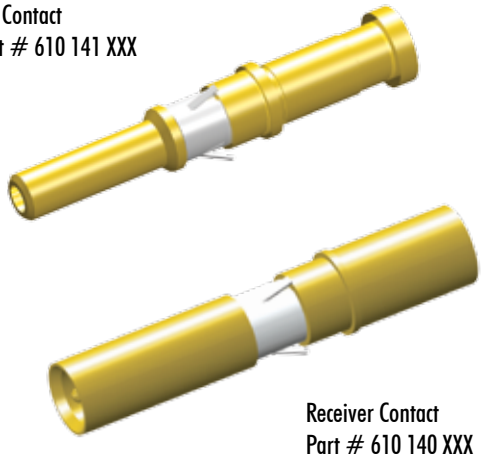

Receiver Contact
Part # 610 140 XXX

Part #	Description	Used in Module
MICRO COAXIAL RECEIVER CONTACTS		
610 140 101	Micro Coaxial Contact, Receiver, RG316, Crimp	510 104 267/270/306 510 160 106/107/111/112/113
610 140 102	Micro Coaxial Contact, Receiver, RG178, Crimp	510 104 267/270/306 510 160 106/107/111/112/113
610 140 103	Micro Coaxial Contact, Receiver, RG179, Crimp	510 104 267/270/306 510 160 106/107/111/112/113
610 140 104	Micro Coaxial Contact, Receiver, RG316 Double Shield, Solder	510 104 267/270/306 510 160 106/107/111/112/113
MICRO COAXIAL ITA CONTACTS		
610 141 101	Micro Coaxial Contact, ITA, RG316, Crimp	510 108 262/263 510 161 106/107/111
610 141 102	Micro Coaxial Contact, ITA, RG178, Crimp	510 108 262/263 510 161 106/107/111
610 141 103	Micro Coaxial Contact, ITA, RG179, Crimp	510 108 262/263 510 161 106/107/111
610 141 104	Micro Coaxial Contact, ITA, RG316 Double Shield, Solder	510 108 262/263 510 161 106/107/111

For information on high speed applications with 50 Ohm Micro Coaxial, visit vpc.com/highspeed

Micro Coaxial Contacts and Patchcords

Micro Coax RF Response
RG316 50 Ohm impedance

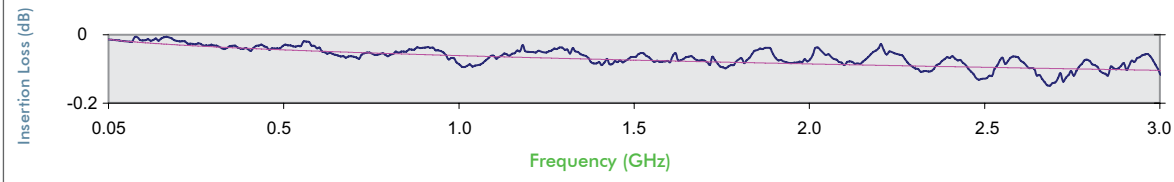

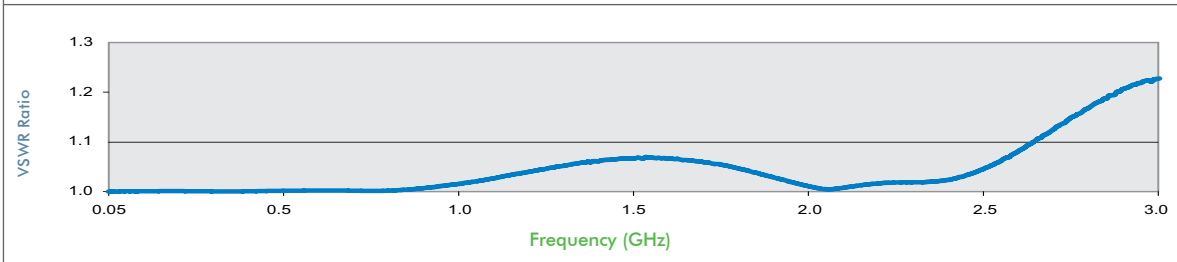

Micro Coax RF Response
50 Ohm impedance Double Shield
RG316DS style de-embedded cable (contact only)

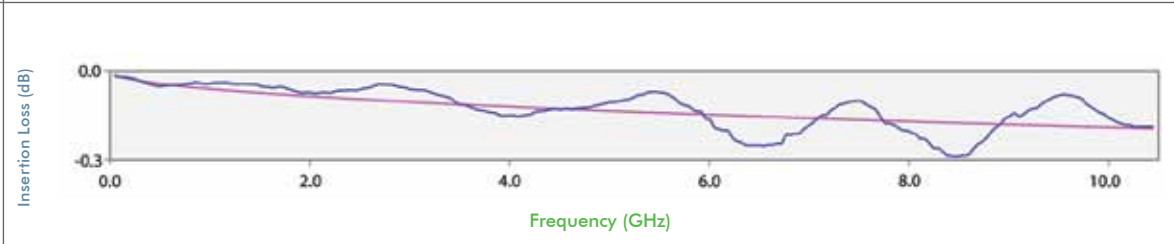

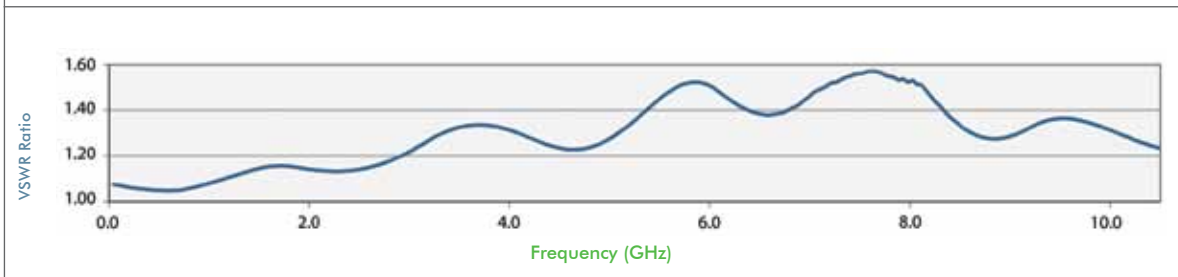

Micro Coax RF Response
75 Ohm impedance
RG179 style de-embedded cable (contact only)

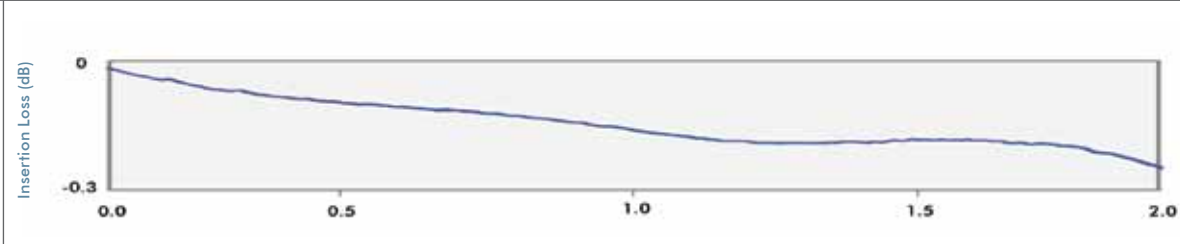

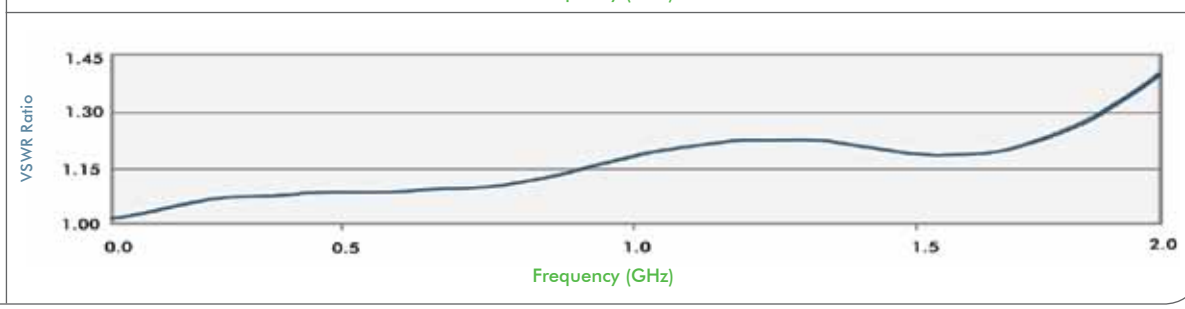

Micro Coaxial Patchcords and Tools

Micro Coaxial Receiver Patchcord	Micro Coaxial ITA Patchcord

Part #	Description	Used in Module
MICRO COAXIAL RECEIVER AND ITA PATCHCORDS		
7-362 116 000-036	Coaxial Patchcord, Receiver, Micro Coaxial, 50 Ohm, 36", RG316 Tan, Single Ended	510 104 267/270/306 510 160 106/107/111/112/113
7-364 178 000-036	Coaxial Patchcord, Receiver, Micro Coaxial, 36", RG178BU Tan, Single Ended	510 104 267/270/306 510 160 106/107/111/112/113
7-366 179 000-036	Coaxial Patchcord, Receiver, Micro Coaxial, 36", RG179U Tan, Single Ended	510 104 267/270/306 510 160 106/107/111/112/113
7-368 117 000-036	Coaxial Patchcord, Receiver, Micro Coaxial, 36", RG316 Double Shield Tan, Single Ended	510 104 267/270/306 510 160 106/107/111/112/113
7-361 116 000-036	Coaxial Patchcord, ITA, Micro Coaxial, 36", RG316 Tan, Single Ended	510 108 262/263 510 161 106/107/111
7-363 178 000-036	Coaxial Patchcord, ITA, Micro Coaxial, 36", RG178BU Tan, Single Ended	510 108 262/263 510 161 106/107/111
7-365 179 000-036	Coaxial Patchcord, ITA, Micro Coaxial, 36", RG179U Tan, Single Ended	510 108 262/263 510 161 106/107/111
7-367 117 000-036	Coaxial Patchcord, ITA, Micro Coaxial, 36", RG316 Double Shield Tan, Single Ended	510 108 262/263 510 161 106/107/111

** To instantly design patchcords online, use our Patchcord Designer at vpc.com/patchcorddesigner.*

Part #	Description	Used on Contact
CRIMP TOOLS		
910 101 131	Tool, Crimp, Micro Coaxial RG178, Receiver and ITA	610 140 102 & 610 141 102
910 101 132	Tool, Crimp, Micro Coaxial RG179 & RG316, Receiver and ITA	610 140 101/103 610 141 101/103
910 101 135	Tool, Locator, Micro Coaxial, Receiver	610 142 101/102
910 101 139	Tool, Locator, Micro Coaxial, ITA	610 143 101
INSPECTION TOOLS		
910 121 179	Tool, Inspection Depth Gage, Micro Coaxial, Receiver	610 140 101/102/103/104
910 121 180	Tool, Inspection Depth Gage, Micro Coaxial, ITA	610 141 101/102/103/104
EXTRACTION TOOL		
910 112 123	Tool, Extraction, Micro Power/Micro Coaxial Contacts	610 140 101/102/103/104 610 141 101/102/103/104
SOLDERING FIXTURE		
910 121 178	Tool, Soldering Fixture, Micro Coaxial, Receiver and ITA	610 140 101/102/103/104 610 141 101/102/103/104

9/9 Position TriPaddle/Micro Power and Micro Coax Module Inserts

Specifications

Material	G10 epoxy glass
Operating Temperature	-40°C to 125°C
Dielectric Withstanding Voltage (DWV)	1500 VDC min.
Available TriPaddle Positions	9
Available Micro Power/Micro Coax Positions	9
Module Positions Needed	1

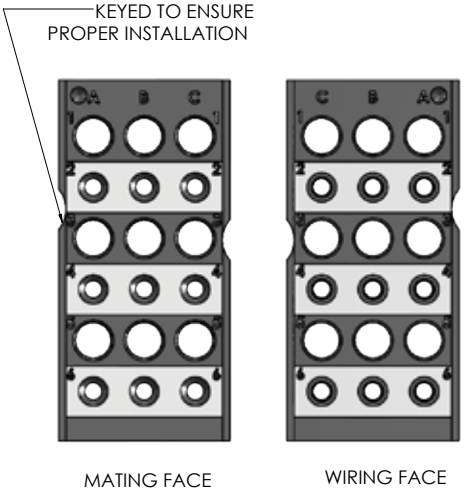

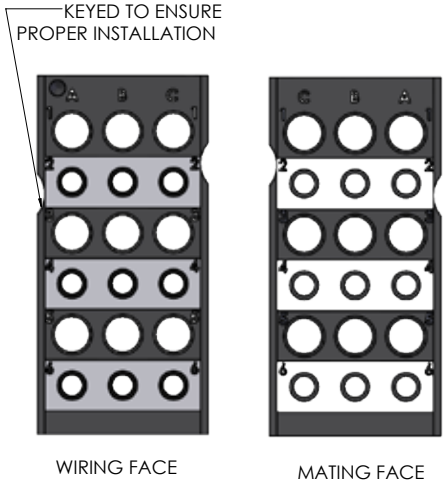

Receiver • **Part # 510 143 004**

ITA • **Part # 510 144 004**

Part #	Description	Contacts Used		
I2 MX RECEIVER TRIPADDLE SIGNAL/MICRO POWER AND MICRO COAXIAL MODULE INSERT		TRIPADDLE	MICRO POWER	MICRO COAX
510 143 004	TriPaddle Signal/Micro Power and Micro Coax, Module Insert, Receiver, i2 MX, 9/9 Position	610 110 101 610 110 177 610 110 128 610 110 167	610 142 101	610 140 101 610 140 102 610 140 103 610 140 104
I2 MX ITA TRIPADDLE SIGNAL/MICRO POWER AND MICRO COAXIAL MODULE INSERT		TRIPADDLE	MICRO POWER	MICRO COAX
510 144 004	TriPaddle Signal/Micro Power and Micro Coax, Module Insert, ITA, i2 MX, 9/9 Position	610 110 108 610 110 129 610 110 169	610 143 101	610 141 101 610 141 102 610 141 103 610 141 104

40 Position Micro Power and Micro Coaxial Modules

Module Specifications

Material	Black high-temp thermoplastic
Temperature	Operating • -55° C to 125° C Non-operating • -65° C to 220° C
Dielectric Withstanding Voltage (DWV)	1500 VDC min.
Available Contact Positions	40
Module Positions Needed	1

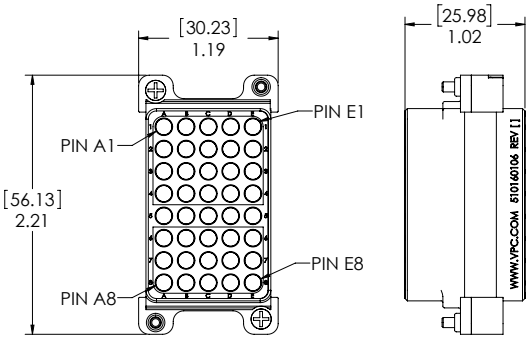

MATING SIDE

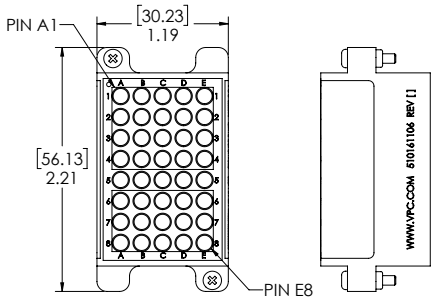

WIRING SIDE

Receiver • Part # 510 160 106 | **ITA • Part # 510 161 106**

Part #	Description	Contacts Used	
		MICRO POWER	MICRO COAX
ICON RECEIVER MICRO POWER AND MICRO COAX MODULE			
510 160 106	Micro Power and Micro Coaxial Module, Receiver, iCon, 40 Position	610 142 101/102	610 140 101/102 610 140 103/104
ICON ITA MICRO POWER AND MICRO COAX MODULE			
510 161 106	Micro Power and Micro Coaxial Module, ITA, iCon, 40 Position	610 143 101	610 141 101/102 610 141 103/104

NOTE: Refer to User's Manual for power applications with this module.

100/15 QuadraPaddle/Micro Power and Micro Coaxial Modules

Module Specifications

Receiver/ITA Module Material	Black high-temp thermoplastic
Receiver/ITA Module Temperature	Operating • -55° C to 125° C Non-operating • -65° C to 220° C
Dielectric Withstanding Voltage (DWV)	1500 VDC min.
Available QuadraPaddle Positions	100
Available Micro Power/Micro Coaxial Positions	15
Module Positions Needed	1

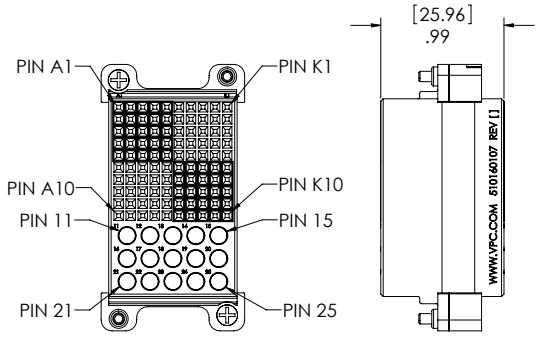

MATING SIDE

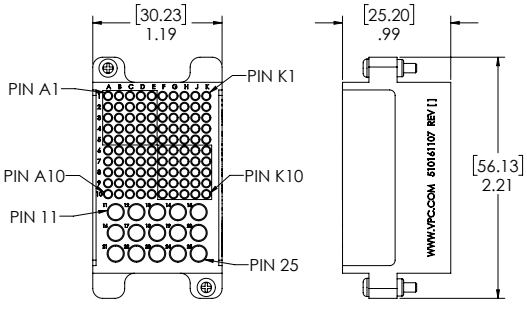

WIRING SIDE

Receiver • Part # 510 160 107 | **ITA • Part # 510 161 107**

Part #	Description	Contacts Used		
		QUADRAPADDLE	MICRO POWER	MICRO COAX
ICON RECEIVER QUADRAPADDLE/MICRO POWER AND MICRO COAXIAL MODULE				
510 160 107	QuadraPaddle Signal / Micro Power and Micro Coaxial Module, Receiver, iCon, 100/15 Position, for Crimp Contacts	610 138 216 610 138 116	610 142 101 610 142 102	610 140 101 610 140 102 610 140 103 610 140 104
510 160 112	QuadraPaddle Signal / Micro Power and Micro Coaxial Module, Receiver, iCon, 100/15 Position, with Twin Female Signal Contacts (610 138 200)	610 138 200 610 138 117 610 138 118 610 138 100	610 142 101 610 142 102	610 140 101 610 140 102 610 140 103 610 140 104
510 160 113	QuadraPaddle Signal / Micro Power and Micro Coaxial Module, Receiver, iCon, 100/15 Position, Fully Loaded with Twin Female Contacts and Round Posts (610138200 and 610138117)	610 138 200 610 138 117	610 142 101 610 142 102	610 140 101 610 140 102 610 140 103 610 140 104
ICON ITA QUADRAPADDLE/MICRO POWER AND MICRO COAXIAL MODULE				
510 161 107	QuadraPaddle Signal / Micro Power and Micro Coaxial Module, ITA, iCon, 100/15 Position	610 138 109 610 138 122 610 138 112 610 138 115	610 143 101	610 141 101 610 141 102 610 141 103 610 141 104

24/30 TriPaddle Signal/Micro Power and Micro Coaxial Modules

Module Specifications

Material	G10 epoxy glass
Temperature	Operating • -55°C to 125°C Non-operating • -55°C to 140°C
Dielectric Withstanding Voltage (DWV)	1500 VDC min.
Available Contact Positions	24/30
Module Positions Needed	1

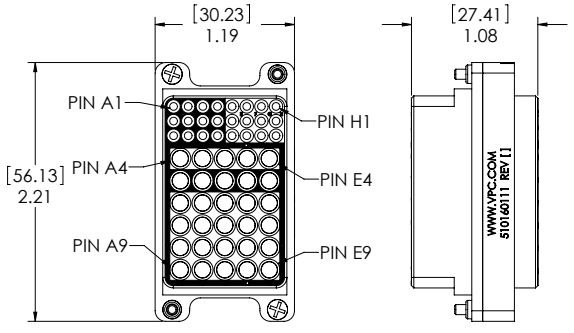

MATING SIDE

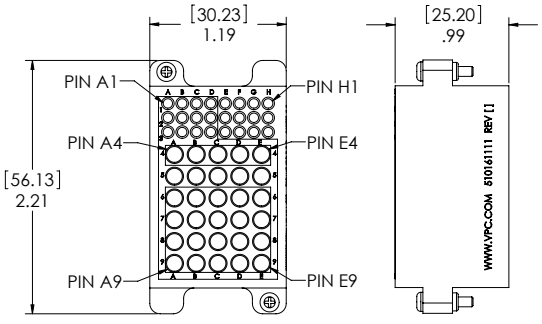

WIRING SIDE

Receiver • Part # 510 160 111

ITA • Part # 510 161 111

Part #	Description	Contacts Used		
		TRIPADDLE	MICRO POWER	MICRO COAX
ICON RECEIVER TRIPADDLE SIGNAL/MICRO POWER AND MICRO COAXIAL MODULE				
510 160 111	TriPaddle Signal/Micro Power and Micro Coaxial Module, Receiver, iCon, 24/30 Position	610 110 101 610 110 128 610 110 167 610 110 177 610 110 179	610 142 101 610 142 102	610 140 101 610 140 102 610 140 103 610 140 104
ICON ITA TRIPADDLE SIGNAL/MICRO POWER AND MICRO COAXIAL MODULE				
510 161 111	TriPaddle Signal/Micro Power and Micro Coaxial Module, ITA, iCon, 24/30 Position	610 110 108 610 110 113 610 110 129 610 110 169	610 143 101	610 141 101 610 141 102 610 141 103 610 141 104

NOTE: Refer to User's Manual for power applications with this module.

50 Position Micro Power and Micro Coaxial Modules

Module Specifications

Material	Black PPS
Temperature	Operating • −55° C to 125° C Non-operating • −55° C to 140° C
Dielectric Withstanding Voltage (DWV)	1500 VDC min.
Available Contact Positions	50
Module Positions Needed	1

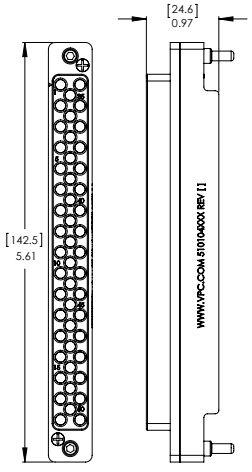

MATING SIDE

Receiver • Part # 510 104 267

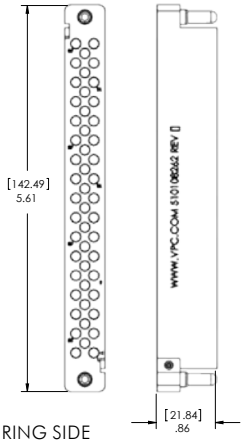

WIRING SIDE

ITA • Part # 510 108 262

Part #	Description	Contacts Used
50 POSITION MICRO POWER AND MICRO COAXIAL RECEIVER MODULES		
510 104 267	Micro Power and Micro Coaxial Module, Receiver, 50 Position	610 140 101/102/103/104 610 142 101/102
510 109 282	Strain Relief Plate 90 Series Receiver, Module, 50 Position, Micro Power and Micro Coaxial	
510 109 298	Strain Relief Plate for Receiver Modules	
50 POSITION MICRO POWER AND MICRO COAXIAL ITA MODULES		
510 108 262	Micro Power and Micro Coaxial Module, ITA, 50 Position	610 141 101/102/103/104 610 143 101
510 109 548	Strain Relief Plate for ITA Modules	

120 Position Micro Power and Micro Coaxial Modules

Module Specifications

Receiver Material	G10 epoxy glass
ITA Material	Black PPS
Receiver Temperature	Operating • −55° C to 125° C Non-operating • −55° C to 140° C
ITA Temperature	Operating • −55° C to 125° C Non-operating • −65° C to 220° C
Dielectric Withstanding Voltage (DWV)	1500 VDC min.
Available Contact Positions	120
Module Positions Needed	2

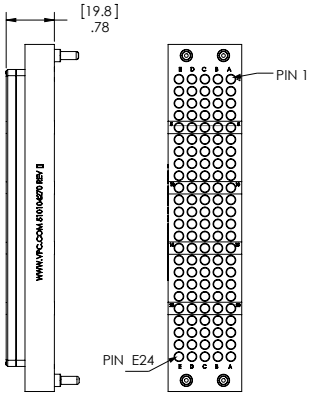

WIRING SIDE

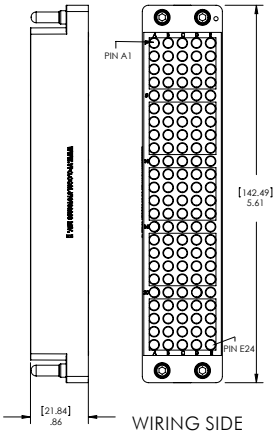

WIRING SIDE

Receiver • Part # 510 104 270

ITA • Part # 510 108 263

Part #	Description	Contacts Used
120 POSITION MICRO POWER AND MICRO COAXIAL RECEIVER MODULES		
510 104 270	Micro Power and Micro Coaxial Module, Receiver, 120 Position	610 140 101/102/103/104 610 142 101/102
510 109 298	Strain Relief Plate for Receiver Modules	
120 POSITION MICRO POWER AND MICRO COAXIAL ITA MODULES		
510 108 263	Micro Power and Micro Coaxial Module, ITA, 120 Position	610 141 101/102/103/104 610 143 101
510 109 296	Strain Relief Plate for ITA Modules	

77/8 Position TriPaddle Signal / Micro Coax/Power Modules

Module Specifications

Receiver Material	G10 epoxy glass
Receiver Temperature	Operating • −55° C to 125° C Non-operating • −55° C to 140° C
ITA Material	G10 epoxy glass
ITA Temperature	Operating • −55° C to 125° C Non-operating • −55° C to 140° C
Dielectric Withstanding Voltage (DWV)	1500 VDC min.
Available Contact Positions	77 signal, 8 Micro Coax/Power
Module Positions Needed	1

Micro Coax/Power contacts occupy the top 8 positions.

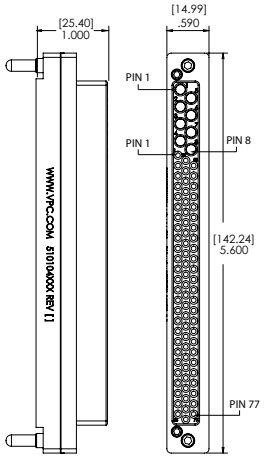

MATING SIDE

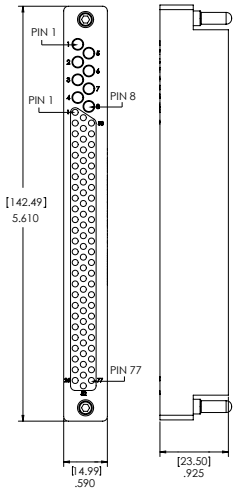

WIRING SIDE

Receiver • Part # 510 104 306 | **ITA • Part # 510 108 278**

Part #	Description	Contacts Used	
		TRIPADDLE	MICO COAX/POWER
TRIPADDLE SIGNAL/MICRO COAX RECEIVER MODULES			
510 104 306	TriPaddle Signal/Micro Coax Module, Receiver, 77/8 Position	610 110 101/ 128/167/177/ 179	610 140 101/102/ 103/104 610 142 101/102
510 109 116	Strain Relief Plate for Select Receiver Modules		
TRIPADDLE SIGNAL/MICRO COAX ITA MODULES			
510 108 278	TriPaddle Signal/Micro Coax Module, ITA, 77/8 Position	610 110 108/ 113/129/169	610 141 101/102/ 103/104 610 143 101/102
510 109 296	Strain Relief Plate for ITA Modules		

High Power Contacts and Patchcords

Contact Specifications

Operating Current	150 amp continuous (using 2 AWG wire)
Contact Resistance	.35 mΩ
Mating Force	2.5 lbs max. [1.13 kg]
Operating Voltage	600V
Operating Temperature	-40°C to 125 °C
T-Rise	+40°C at 150 amps +30°C at 125 amps
Contact Body Material	Cu alloy Internal contact beams - Cu alloy
Contact Plating	Body - 30μ" Au over 100μ" Ni Internal contact beams - 5μ" Ag over 50μ" Ni
Contact Termination	Crimp
Cycle Life	10,000 cycles

Receiver Contact • Part # 610 149 101

ITA Contact • Part # 610 150 101

150 Amp High Power Receiver Patchcord | 150 Amp High Power ITA Patchcord

Temperature Rise Test

150 Amp High Power Contacts

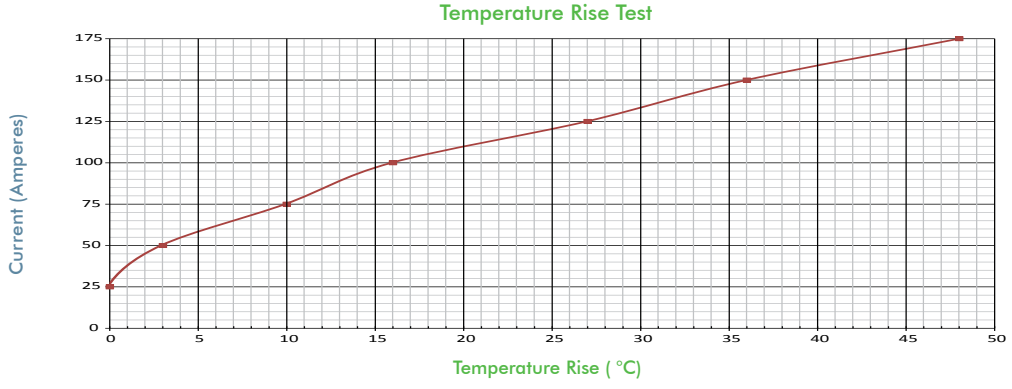

Part #	Description	Used in Module
150 AMP HIGH POWER RECEIVER CONTACT		
610 149 101	High Power Contact, Receiver, 150 Amps, 2 AWG, 30μ" Gold	510 104 307 510 160 124
150 AMP HIGH POWER ITA CONTACT		
610 150 101	High Power Contact, ITA, 150 Amps, 2 AWG, 30μ" Gold	510 108 281 510 161 124
150 AMP HIGH POWER RECEIVER AND ITA PATCHCORDS		
7-221 902 000-036	High Power Contact, Receiver, 150 Amps, 36", 2 AWG, Single Ended	510 104 307 510 160 307
7-222 902 000-036	High Power Contact, ITA, 150 Amps, 36", 2 AWG, Single Ended	510 108 281 510 161 124
CRIMP TOOLS		
910 102 116	Tool, Crimp Kit (Pneumatic Crimp Tool, Locator and Die), High Power, Receiver and ITA	
910 102 117	Tool, Crimp Kit (Locator and Die), High Power, Receiver and ITA	
EXTRACTION TOOL		
910 112 129	Tool, Extraction, High Power, Receiver and ITA	

High Power iCon Modules

Module Specifications

Receiver Material	G10 epoxy glass
Receiver Temperature	Operating • –55° C to 125° C Non-operating • –55° C to 140° C
ITA Material	G10 epoxy glass
ITA Temperature	Operating • –55° C to 125° C Non-operating • –65° C to 140°C
Dielectric Withstanding Voltage (DWV)	1500 VDC min.
Available Contact Positions	4 signal/4 high power
Module Positions Needed	1

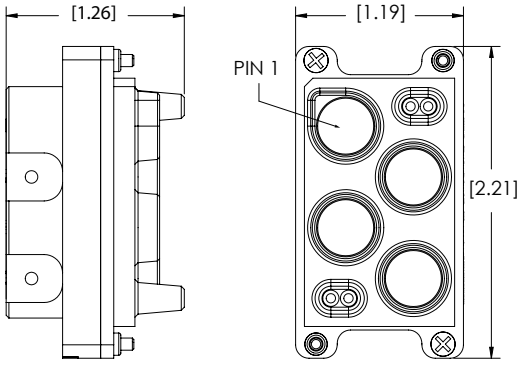

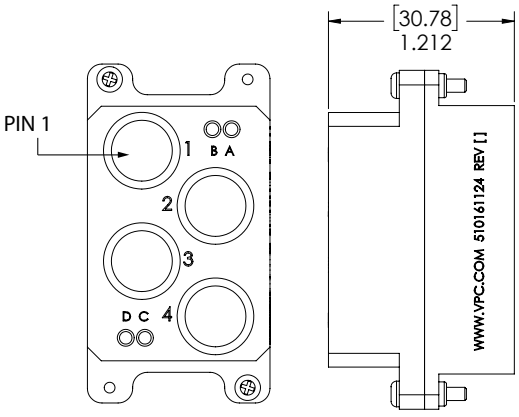

Receiver • Part # 510 160 124

ITA • Part # 510 161 124

Part #	Description	Contacts Used
HIGH POWER ICON RECEIVER MODULES		
510 160 124	TriPaddle Signal/High Power Module, Receiver, iCon, 4/4 Position	610 149 101
510 109 572	Strain Relief Plate, iCon High Power, Receiver	
HIGH POWER ICON ITA MODULE		
510 161 124	TriPaddle Signal/High Power Module, ITA, iCon, 4/4 Position	610 150 101

High Power Modules

Module Specifications

Receiver Material	G10 epoxy glass
Receiver Temperature	Operating • −55° C to 125° C Non-operating • −55° C to 140° C
ITA Material	G10 epoxy glass
ITA Temperature	Operating • −55° C to 125° C Non-operating • −65° C to 220°C
Dielectric Withstanding Voltage (DWV)	1500 VDC min.
Available Contact Positions	6 signal/6 high power
Module Positions Needed	1

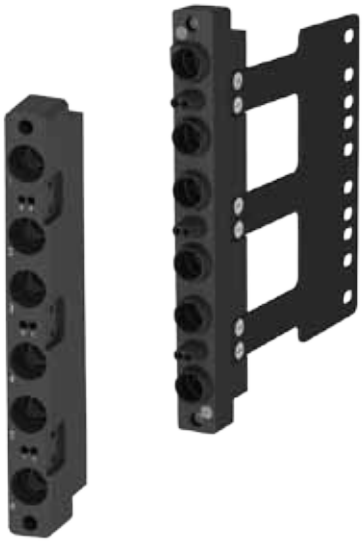

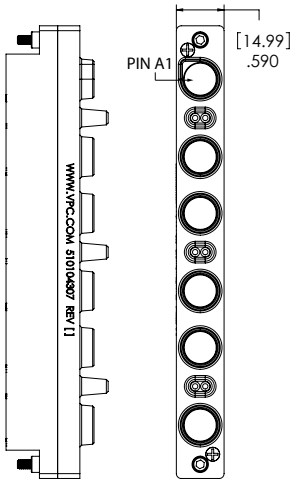

MATING SIDE

Receiver • Part # 510 104 307

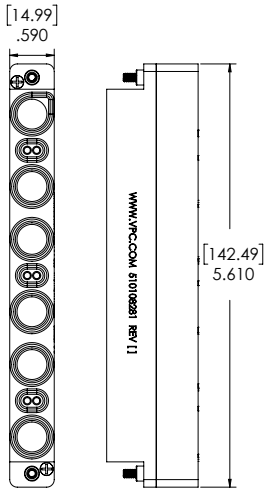

MATING SIDE

ITA • Part # 510 108 281

Part #	Description	Contacts Used
HIGH POWER RECEIVER MODULE		
510 104 307	TriPaddle Signal/High Power Module, Receiver, 6/6 Position, Strain Relief Plate Included	610 149 101
HIGH POWER ITA MODULES		
510 108 281	TriPaddle Signal/High Power Module, ITA, 6/6 Position	610 150 101
510 109 549	Strain Relief Plate for High Power 90 Series ITA and Receiver Modules	

75 Ohm Coaxial Contacts and Patchcords

Contact Specifications

Characteristic Impedance	75 Ω
Frequency Range	DC to 3 GHz
Insertion Loss	-1.64 dB @ 3 GHz
VSWR	< 2.95 @ 3 GHz
Operating Current	3.0 amp DC max. continuous
Contact Resistance	Center contact – 5 mΩ Outer shield – 3 mΩ
Mating Force	4.0 lbs max. [1.81 kg]
Dielectric Withstanding Voltage (DWV)	800 volts RMS
Insulation Resistance	1000 MΩ min.
Contact Body Material	Female & male shield • brass Center contact • BeCu
Contact Plating	Center conductor shield • 30μ" Au over 100μ" Ni
Cycle Life	20,000 cycles

Receiver Contact • Part # 610 104 157

ITA Contact • Part # 610 103 169

75 Ohm Coaxial Receiver Patchcord | 75 Ohm Coaxial ITA Patchcord

75 Ohm Coaxial RF Response
75 Ohm impedance
RG179 style de-embedded cable (contact only)

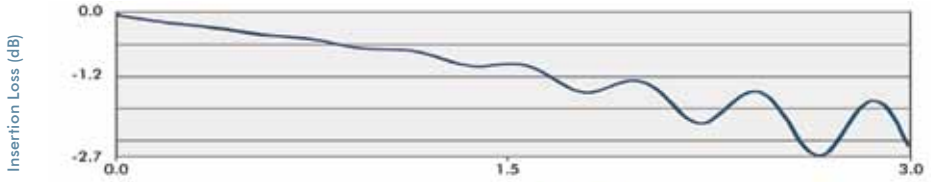

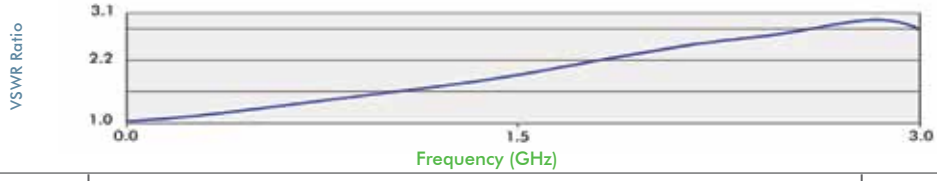

Part #	Description	Used in Module
75 OHM COAXIAL RECEIVER CONTACT		
610 104 157	Coaxial Contact, Receiver, 75 Ohm, RG179, Crimp	510 104 249
75 OHM COAXIAL ITA CONTACT		
610 103 169	Coaxial Contact, ITA, 75 Ohm, RG179, Crimp	510 108 179
75 OHM COAXIAL RECEIVER AND ITA PATCHCORDS		
7-382 179 000-036	Coaxial Patchcord, Receiver, 75 Ohm, 36", RG179, Single Ended	510 104 249
7-381 179 000-036	Coaxial Patchcord, ITA, 75 Ohm, 36", RG179, Single Ended	510 108 179
** To instantly design patchcords online, use our Patchcord Designer at vpc.com/patchcorddesigner.*		
CRIMP TOOLS		
910 102 106	Tool Kit, 75 Ohm Coaxial Contacts, Receiver	
910 102 107	Tool Kit, 75 Ohm Coaxial, ITA	
910 104 139	Tool, Hex Crimp for Outer Shield, 75 Ohm Coaxial, Receiver and ITA Contacts	
EXTRACTION TOOL		
910 112 117	Tool, Extraction, for 75 Ohm and 20/26 GHz Receiver and ITA Contacts	

32 Position 75 Ohm Coaxial Modules

Module Specifications

Receiver Material	G10 epoxy glass
Receiver Temperature	Operating • –55° C to 125° C Non-operating • –55° C to 140° C
ITA Material	Black-PPS
ITA Temperature	Operating • –55° C to 125° C Non-operating • –65° C to 220°C
Dielectric Withstanding Voltage (DWV)	1500 VDC min.
Available Contact Positions	32
Module Positions Needed	1

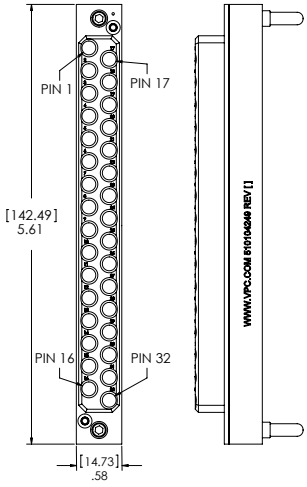

MATING SIDE

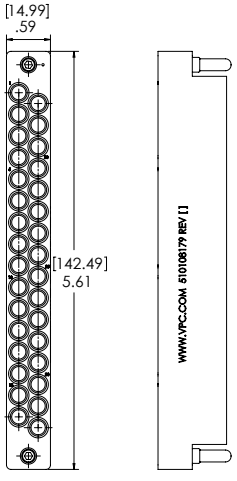

WIRING SIDE

Receiver • Part # 510 104 249 | **ITA • Part # 510 108 179**

Part #	Description	Contacts Used
75 OHM COAXIAL RECEIVER MODULES		
510 104 249	Coaxial Module, Receiver, 75 Ohm, 32 Position	610 104 157
510 109 298	Strain Relief Plate for Receiver Modules	
20 GHZ/75 OHM COAXIAL ITA MODULES		
510 108 179	Coaxial Module, ITA, 20/26 GHz, 75 Ohm and 75 Ohm HD, 32 Position	610 103 169 610 102 132
510 109 296	Strain Relief Plate for ITA Modules	

75 Ohm High Definition (HD) Coaxial Patchcords and Contacts

Contact Specifications

Characteristic Impedance	75 Ω
Frequency Range	DC to 3 GHz
Insertion Loss	-.86 dB @ 3 GHz
VSWR	< 2.26 @ 3 GHz
Operating Current	3.0 amp DC max. continuous
Contact Resistance	Center contact – 5 mΩ Outer shield – 3 mΩ
Mating Force	
Dielectric Withstanding Voltage (DWV)	800 VDC min.
Insulation Resistance	1000 MΩ min.
Contact Body Material	Female & male shield • brass Center contact • BeCu
Contact Plating	Center conductor shield • 30μ" Au over 100μ" Ni
Cycle Life	20,000 cycles

Receiver Contact • Part # 610 102 133

ITA Contact • Part # 610 102 132

75 Ohm HD Coaxial Receiver Patchcord | 75 Ohm HD Coaxial ITA Patchcord

75 Ohm HD Coaxial RF Response
75 Ohm impedance
de-embedded cable (contact only)

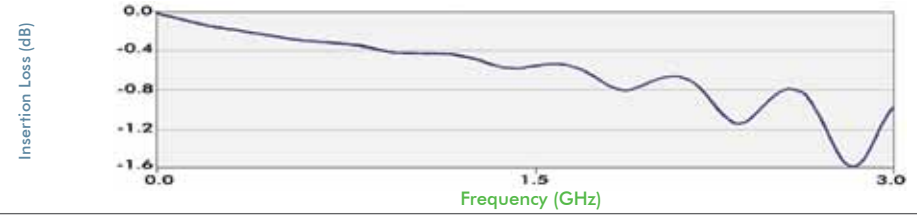

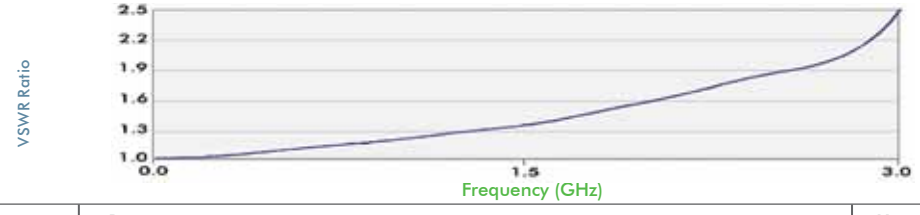

Part #	Description	Used in Module
75 OHM HD COAXIAL RECEIVER CONTACT		
610 102 133	Coaxial Contact, Receiver, 75 Ohm HD, sm59/U Belden 1855A, 3 GHz, Crimp	510 104 251 510 160 114/115
75 OHM HD COAXIAL ITA CONTACT		
610 102 132	Coaxial Contact, ITA, 75 Ohm HD, sm59/U Belden 1855A, 3 GHz, Crimp	510 108 179 510 161 114/115
75 OHM HD COAXIAL RECEIVER AND ITA PATCHCORDS		
7-412 873 000-036	Coaxial Patchcord, Receiver, 75 Ohm HD, 36" sm59/U Belden 1855A, Single Ended	510 104 251 510 160 114/115
7-411 873 000-036	Coaxial Patchcord, ITA, 75 Ohm HD, 36", sm59/U Belden 1855A, Single Ended	510 108 179 510 161 114/115

** To instantly design patchcords online, use our Patchcord Designer at vpc.com/patchcorddesigner.*

CRIMP TOOL	
910 104 139	Tool, Hex Crimp for Outer Shield, 75 Ohm Coaxial, Receiver and ITA
EXTRACTION TOOL	
910 112 117	Tool, Extraction, 75 Ohm and 20/26 GHz Coaxial, Receiver and ITA

20/26 GHz Coaxial Contacts and Patchcords

Contact Specifications

Characteristic Impedance	50 Ω
Frequency Range	DC to 26 GHz
Insertion Loss	.06 x√f(GHz) dB
VSWR	1.15 + .01 (f) GHz (w/ SF142 [20 GHz]) 1.25 for 2 – 18 GHz (w/ TF402) 1.30 for 18 – 26 GHz (w/ TF402)
Operating Current	5 Amps DC max. continuous
Contact Isolation	> –90 dB over frequency range
Contact Resistance	4 mΩ max. center conductor 2 mΩ max. shield
Mating Force	4.0 lbs max. [1.81 kg]
Dielectric Withstanding Voltage (DWV)	800 volts RMS shield to center contact 1000 volts RMS contact to contact
Insulation Resistance	2000 MΩ min.
Contact Body Material	Female & male plug (RCV & ITA) Shield – brass Center conductor – BeCu
Contact Plating	30μ" Au over 100μ" Ni
Cycle Life	20,000 cycles

ITA Crimp Contact
Part # 610 102 110

Receiver Crimp Contact
Part # 610 102 109

ITA Solder Contact
Part # 610 102 118

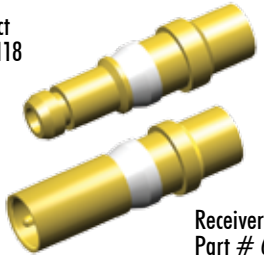

Receiver Solder Contact
Part # 610 102 119

For applications in which a more flexible cable is needed, use Flex 402 patchcords. Flex 402 cable has half the minimum bend radius as SF142. When flexibility is not as important, use our crimp contact with SF142 cable.

20/26 GHz Coaxial RF Response
50 Ohm impedance
SF142 style de-embedded cable (contact only)

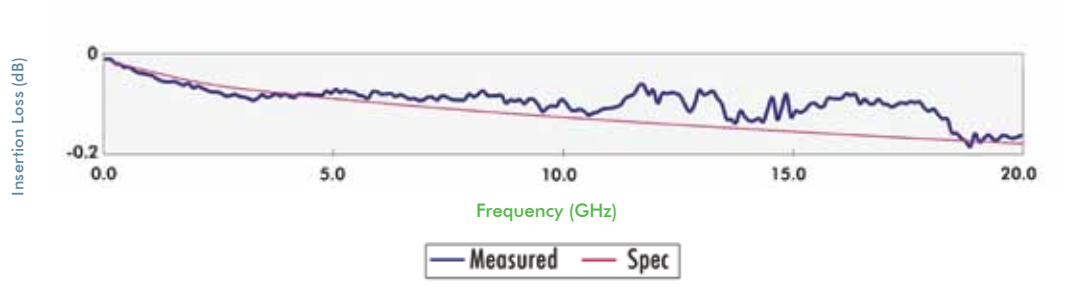

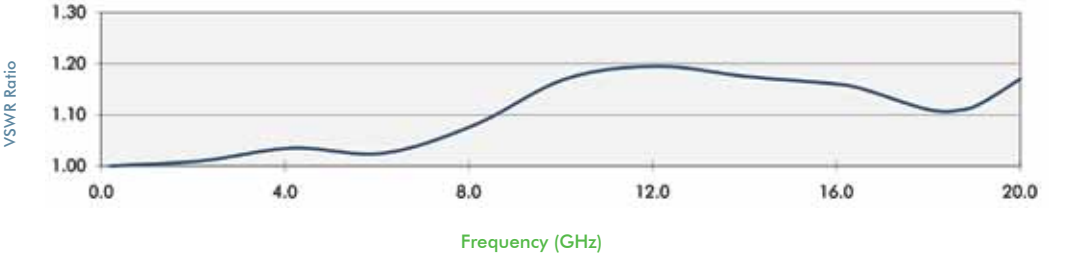

20/26 GHz Coaxial Contacts and Patchcords

20/26 GHz Coaxial Receiver Patchcord • SF142B

20/26 GHz Coaxial ITA Patchcord • SF142B

20/26 GHz Coaxial Receiver Patchcord • Flex 402

20/26 GHz Coaxial ITA Patchcord • Flex 402

Part #	Description	Used in Module
20/26 GHZ COAXIAL RECEIVER CONTACTS		
610 102 109	Coaxial Contact, Receiver, 20/26 GHz, SF142B, Crimp/Clamp	510 104 251
610 102 119	Coaxial Contact, Receiver, 20/26 GHz, Flex 402, Solder (available only in patchcords)	510 104 251/289 510 160 114/115
20/26 GHZ COAXIAL ITA CONTACTS		
610 102 110	Coaxial Contact, ITA, 20/26 GHz, SF142B, Crimp/Clamp	510 108 179 510 161 114/115
610 102 118	Coaxial Contact, ITA, 20/26 GHz, Flex 402, Solder (available only in patchcords)	510 108 179 510 161 114/115
20/26 GHZ COAXIAL RECEIVER AND ITA PATCHCORDS		
7-384 143 000-036	20/26 GHz Coaxial Patchcord, Receiver, 50 Ohm, 36", SF142B, Single Ended	510 104 251
7-388 102 000-036	20/26 GHz Coaxial Patchcord, Receiver, 50 Ohm, 36", Flex 402, Single Ended	510 104 251 510 160 114/115
7-383 143 000-036	20/26 GHz Coaxial Patchcord, ITA, 50 Ohm, 36", SF142B, Single Ended	510 108 179
7-387 102 000-036	20/26 GHz Coaxial Patchcord, ITA, 50 Ohm, 36", Flex 402, Single Ended	510 108 179 510 161 114/115

** To instantly design patchcords online, use our Patchcord Designer at vpc.com/patchcorddesigner.*

CRIMP TOOL

910 101 124	Tool, Crimp, 20/26 GHz Coaxial Contacts, Receiver and ITA

EXTRACTION TOOL

910 112 117	Tool, Extraction, 75 Ohm and 20/26 GHz Coaxial Contacts, Receiver and ITA

18 Position 20/26 GHz and 75 Ohm HD Coaxial Modules

Module Specifications

Material	G10 epoxy glass
Temperature	Operating • -55°C to 125°C Non-operating • -55°C to 140°C
Dielectric Withstanding Voltage (DWV)	1500 VDC min.
Available Contact Positions	18
Module Positions Needed	1

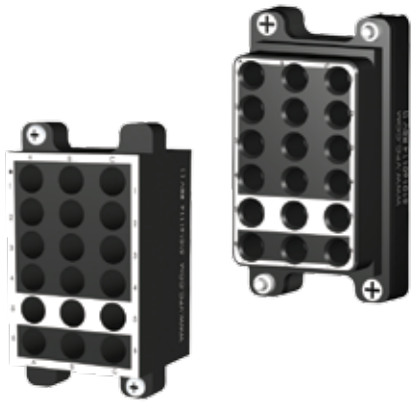

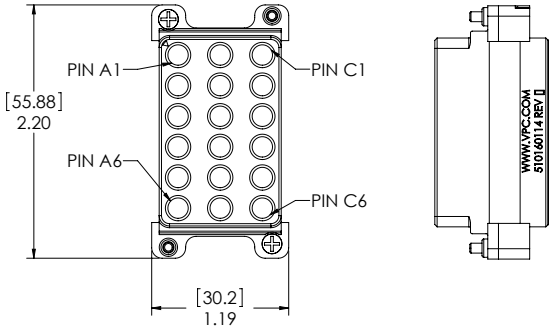

MATING SIDE

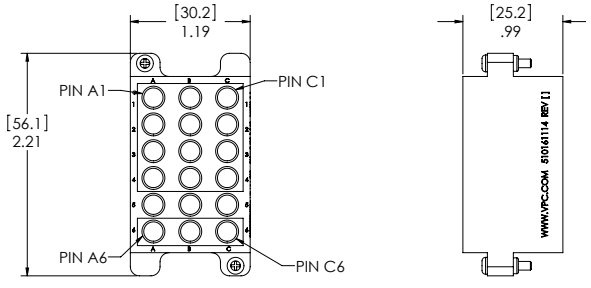

WIRING SIDE

Receiver • Part # 510 160 114 | **ITA • Part # 510 161 114**

Part #	Description	Contacts Used 20/26 GHz	Contacts Used 75 OHM HD
ICON RECEIVER 20/26 GHZ AND 75 OHM HD COAXIAL MODULE			
510 160 114	Coaxial Module, Receiver, iCon, 20/26 GHz/75 Ohm HD, 18 Position	610 102 119 (patchcord only)	610 102 133
ICON ITA 20/26 GHZ AND 75 OHM HD COAXIAL MODULE			
510 161 114	Coaxial Module, ITA, iCon, 20/26 GHz/75 Ohm HD, 18 Position	610 102 118 (patchcord only)	610 102 132

NOTE: Refer to User's Manual for power applications with this module.

64/8 TriPaddle Signal / 20/26 GHz & 75 Ohm HD Coaxial Modules

Module Specifications

Material	G10 epoxy glass
Temperature	Operating • -55°C to 125°C Non-operating • -55°C to 140°C
Dielectric Withstanding Voltage (DWV)	1500 VDC min.
Available Contact Positions	64/8
Module Positions Needed	1

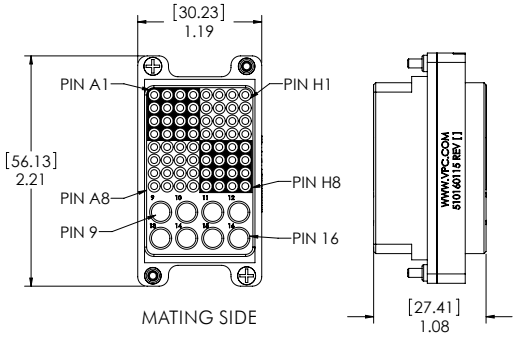

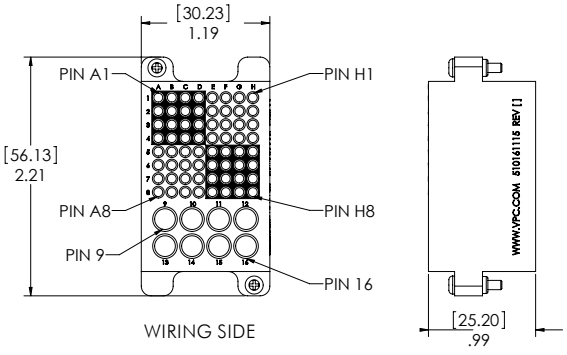

Receiver • Part # 510 160 115

ITA • Part # 510 161 115

Part #	Description	Contacts Used		
		TRIPADDLE	20/26 GHz	75 OHM HD
ICON RECEIVER TRIPADDLE SIGNAL / 20/26 GHZ & 75 OHM HD COAXIAL MODULE				
510 160 115	TriPaddle Signal / 20/26 GHz & 75 Ohm HD Coaxial Module, Receiver, iCon, 64/8 Position	610 110 101 610 110 128 610 110 167 610 110 177 610 110 179	610 102 119 (patchcord only)	610 102 133
ICON ITA TRIPADDLE SIGNAL / 20/26 GHZ COAXIAL MODULE				
510 161 115	TriPaddle Signal / 20/26 GHz & 75 Ohm HD Coaxial Module, ITA, iCon, 64/8 Position	610 110 108 610 110 113 610 110 129 610 110 169	610 102 118 (patchcord only)	610 102 132

32 Position 20/26 GHz or 75 Ohm High Definition (HD) Coaxial Modules

Module Specifications

Material	Black PPS
Temperature	Operating • −55° C to 125° C Non-operating • −65° C to 220° C
Module with Strain Relief Material	Black PPS
Module with Strain Relief Temperature	Operating • −55° C to 125° C Non-operating • −65° C to 220° C
Strain Relief Material	Aluminum
Strain Relief Finish	Powder coat
Dielectric Withstanding Voltage (DWV)	1500 VDC min.
Available Contact Positions	32
Module Positions Needed	1

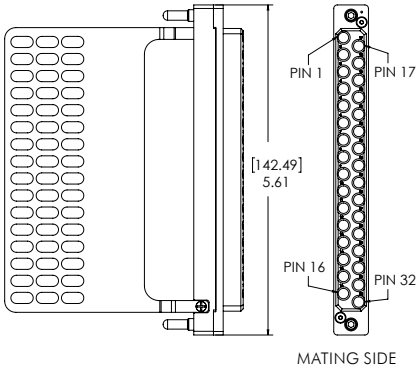

Receiver • Part # 510 104 289

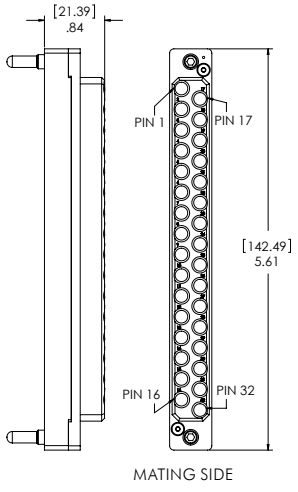

Receiver • Part # 510 104 251

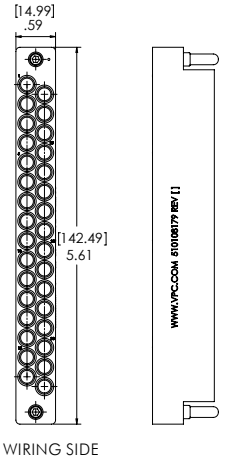

ITA • Part # 510 108 179

Part #	Description	Contacts Used
	20/26 GHZ OR 75 OHM HD COAXIAL RECEIVER MODULES	
510 104 251	Coaxial Module, Receiver, 20/26 GHz and 75 Ohm HD, 32 Position	610 102 109/119/133
510 104 289	Coaxial Module, Receiver, 20/26 GHz and 75 Ohm HD, 32 Position, Includes Strain Relief Plate	610 102 109/119
510 109 298	Strain Relief Plate for Receiver Modules	
	20/26 GHZ OR 75 OHM HD COAXIAL ITA MODULES	
510 108 179	Coaxial Module, ITA, 20/26 GHz, 75 Ohm and 75 Ohm HD, 32 Position	610 102 110/117/118/132 610 103 169
510 109 296	Strain Relief Plate for ITA Modules	

20/26 GHz Coaxial SMA Contacts

Contact Specifications

Characteristic Impedance	50 Ω
Frequency Range	DC to 26 GHz
Insertion Loss	.06 x√f(GHz) dB
VSWR	1.15 + .01 (f) GHz
Operating Current	5 Amp DC max. continuous
Contact Isolation	> –90 dB over frequency range
Mating Force	4.0 lbs max. [1.81 kg]
Contact Resistance	5 mΩ max. center conductor 3 mΩ max. shield
Dielectric Withstanding Voltage (DWV)	800 volts RMS shield to center contact 1000 volts RMS contact to contact
Insulation Resistance	2000 MΩ min.
Contact Body Material	Shield – brass Center conductor – BeCu
Contact Plating	30μ" Au over 100μ" Ni
Cycle Life	20,000 cycles

ITA Contact • Part # 610 102 134

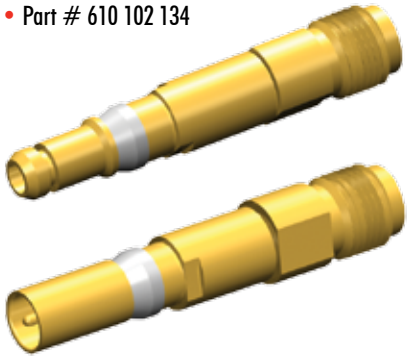

Receiver Contact • Part # 610 102 135

20/26 GHz Coaxial SMA Receiver Patchcord	20/26 GHz Coaxial SMA ITA Patchcord

Part #	Description	Used in Module
20/26 GHZ COAXIAL RECEIVER CONTACT		
610 102 135	Coaxial Contact, Receiver, 20/26 GHz with SMA Adapter	510 104 287
20/26 GHZ COAXIAL ITA CONTACT		
610 102 134	Coaxial Contact, ITA, 20/26 GHz with SMA Adapter	510 108 240
20/26 GHZ COAXIAL SMA PATCHCORDS		
7-528 143 000-036	Coaxial Patchcord, SMA Plug, 36", SF142B Tan, Single Ended	
7-531 102 000-036	Coaxial Patchcord, SMA Plug, 36", Flex 402 Blue, Single Ended	

17 Position 20/26 GHz SMA Coaxial Modules

Module Specifications

Module Material	G10 epoxy glass
Module Temperature	Operating • −55° C to 125° C Non-operating • −55° C to 140° C
Dielectric Withstanding Voltage (DWV)	1500 VDC min.
Receiver Strain Relief Material	Aluminum
Receiver Strain Relief Finish	Clear anodize
Available Contact Positions	17
Module Positions Needed	1

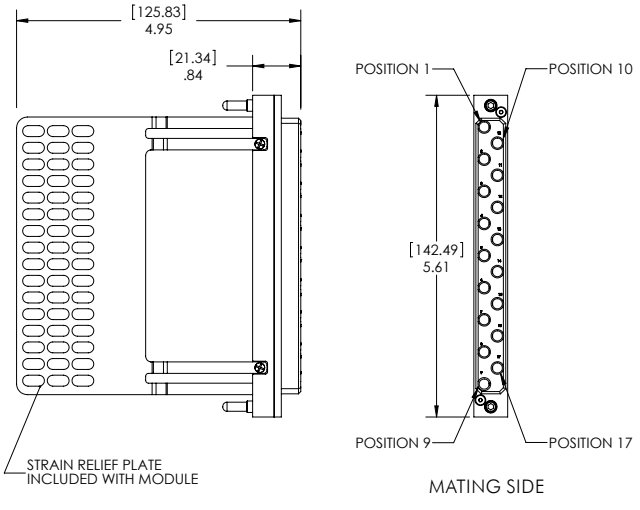

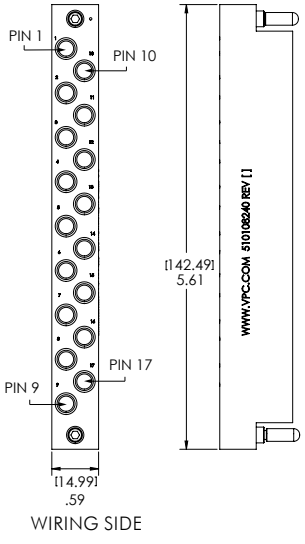

Receiver • Part # 510 104 287 | **ITA • Part # 510 108 240**

Part #	Description	Contacts Used
18 GHZ COAXIAL RECEIVER MODULE AND STRAIN RELIEF		
510 104 287	Coaxial Module, Receiver, 20/26 GHz, 17 Position	610 102 135
18 GHZ COAXIAL ITA MODULE		
510 108 240	Coaxial Module, ITA, 20/26 GHz, 17 Position	610 102 134

40 GHz Coaxial Contact

Contact Specifications

Characteristic Impedance	50 Ω
Frequency Range	DC – 40 GHz
Temperature	–50° C to 125° C
Insertion Loss	≤ -0.3 dB @ DC - 18 GHz ≤ -1.5 dB @ 18 - 40 GHz
VSWR	1.35 DC to 18 GHz 1.55 18 to 40 GHz
Mating Force	1.5 lbs max. [.68 kg]
Contact Body	Passivated stainless steel body Beryllium copper contacts Au plated
Contact Isolation	> –85 dB
Cycle Life	20,000 cycles

Part # 610 102 114

40 GHz Coaxial RF Response
50 Ohm impedance
PE-LL095P style de-embedded cable (contact only)

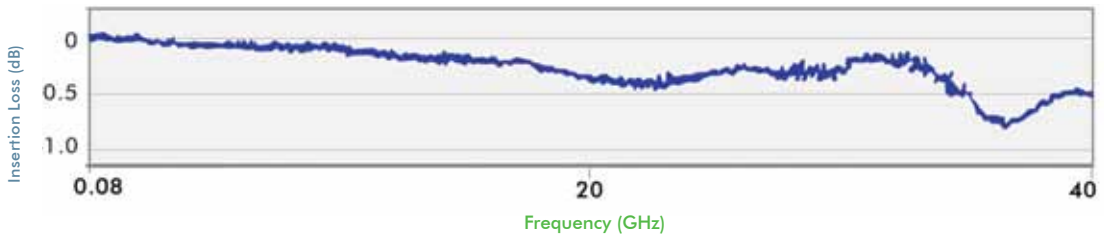

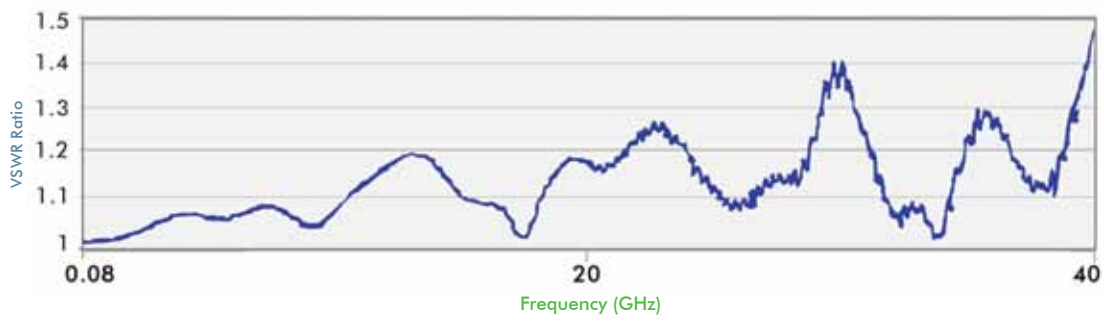

Part #	Description	Used in Module
40 GHZ COAXIAL RECEIVER/ITA CONTACT		
610 102 114	Coaxial Contact, Receiver/ITA, 40 GHz	510 108 169 510 104 224

NOTE: The 40 GHz Connector is a blind mate connector that mates with 3.5 mm and 2.92 mm connectors. 2.92 mm connectors are recommended for frequencies above 26 GHz.

** VPC recommends the 40 GHz modules be placed in module slots near the outside edges of the receiver.*

40 GHZ COAXIAL PATCHCORD		
7-632 195 632-036	Coaxial Patchcord, 2.92 mm Plug, 36", Double Ended (40 GHz)	

8 Position 40 GHz Coaxial Modules

Module Specifications

Material	Aluminum
Finish	Clear chromate
Temperature	–55° C to 125° C
Dielectric Withstanding Voltage (DWV)	1500 VDC min.
Available Contact Positions	8
Module Positions Needed	1

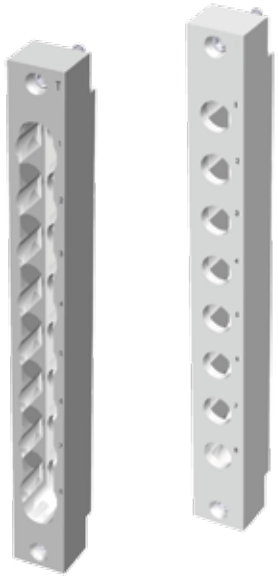

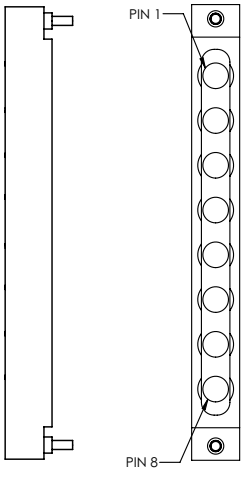

WIRING SIDE

Receiver • Part # 510 104 224

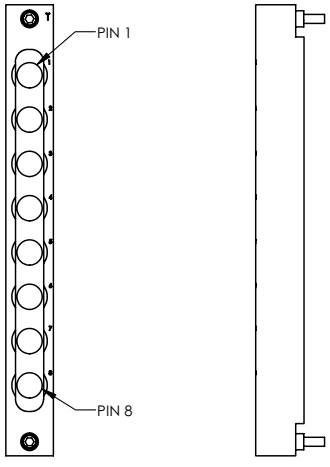

WIRING SIDE

ITA • Part # 510 108 169

Part #	Description	Contacts Used
40 GHZ COAXIAL RECEIVER MODULE AND STRAIN RELIEF		
510 104 224	Coaxial Module, Receiver, 40 GHz, 8 Position	610 102 114
510 109 298	Strain Relief Plate for Receiver Modules	
40 GHZ COAXIAL ITA MODULE AND STRAIN RELIEF		
510 108 169	Coaxial Module, ITA, 40 GHz, 8 Position	610 102 114
510 109 296	Strain Relief Plate for ITA Modules	

** VPC recommends the 40 GHz modules be placed in module slots near the outside edges of the receiver.*

Twinaxial Contacts and Patchcords

Contact Specifications

Operating Current and Voltage	3 amp max. continuous 480 RMS
Contact Resistance	Center contact is < 6.5 mΩ; Intermediate contact is < 3 mΩ; Outer contact is < 3.5 mΩ
Insertion Loss	−0.044 dB @ 0.2 GHz
VSWR	Approximately 1.1:1 @ 100 MHz
Insulation Resistance	106 MΩ min.
Mating Force	3.5 lbs max. [1.59 kg]
Contact Body Material	Outer shell • brass Inner shield • bronze Male contact • brass
Contact Plating	40μ" Au over 130μ" Ni
Cycle Life	20,000 cycles

ITA Contact • Part # 610 113 145

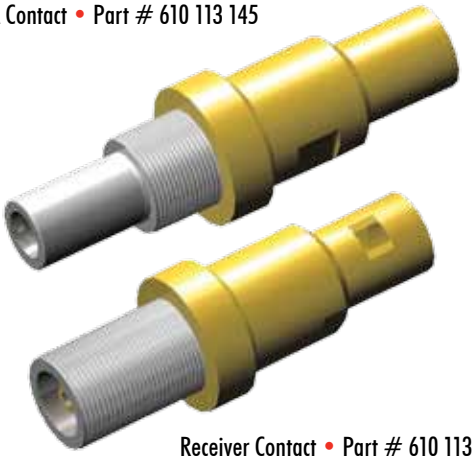

Receiver Contact • Part # 610 113 144

Twinaxial Receiver Patchcord	Twinaxial ITA Patchcord

Part #	Description	Used in Module
TWINAXIAL RECEIVER CONTACT		
610 113 144	Twinaxial Contact, Receiver	510 104 155 510 160 109
TWINAXIAL ITA CONTACT		
610 113 145	Twinaxial Contact, ITA	510 108 138 510 161 109
TWINAXIAL RECEIVER AND ITA PATCHCORDS		
7-402 423 000-036	Twinaxial Patchcord, Receiver, 3 Amp, 36", 22 AWG Shielded Twisted Pair, Single Ended	510 104 155 510 160 109
7-401 423 000-036	Twinaxial Patchcord, ITA, 3 Amp, 36", 22 AWG Shielded Twisted Pair, Single Ended	510 108 138 510 161 109

** To instantly design patchcords online, use our Patchcord Designer at vpc.com/patchcorddesigner.*

40/4 Position TriPaddle/Twinaxial Modules

Module Specifications

Material	G10 epoxy glass
Temperature	Operating • -55° C to 125° C Non-operating • -55° C to 140° C
Dielectric Withstanding Voltage (DWV)	1500 VDC min.
Available Contact Positions	40/4
Module Positions Needed	1

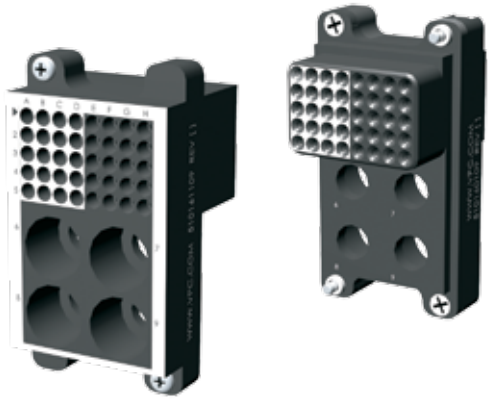

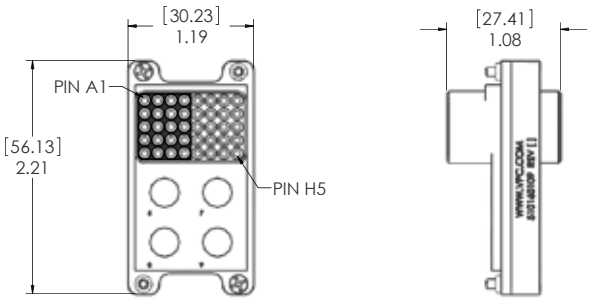

MATING SIDE

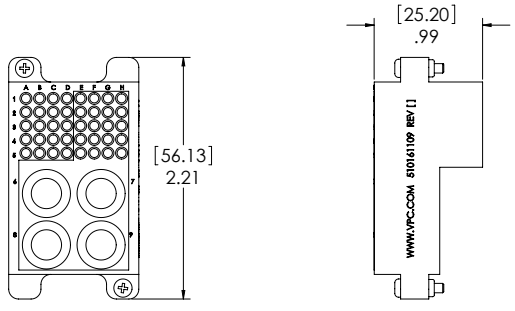

WIRING SIDE

Receiver • Part # 510 160 109 | **ITA • Part # 510 161 109**

Part #	Description	Contacts Used	
		TRIPADDLE	TWINAXIAL
ICON RECEIVER TRIPADDLE/TWINAXIAL MODULE			
510 160 109	TriPaddle Signal/Twinaxial Module, Receiver, iCon, 40/4 Position	610 110 101 610 110 104 610 110 128 610 110 167	610 113 144
ICON ITA TRIPADDLE/TWINAXIAL MODULE			
510 161 109	TriPaddle Signal/Twinaxial Module, ITA, iCon, 40/4 Position	610 110 108 610 110 113 610 110 129 610 110 169	610 113 145

8 Position Twinaxial Modules

Module Specifications

Material	G10 epoxy glass
Temperature	Operating • −55° C to 125° C Non-operating • −55° C to 140° C
Available Contact Positions	8
Module Positions Needed	1

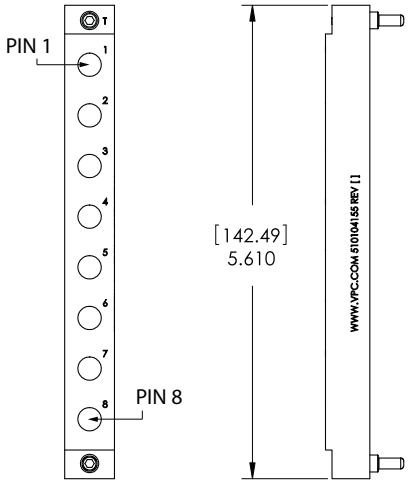

MATING SIDE

Receiver • Part # 510 104 155

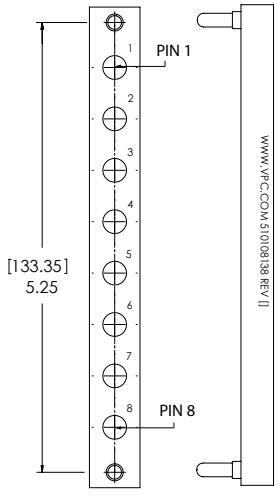

MATING SIDE

ITA • Part # 510 108 138

Part #	Description	Contacts Used
TWINAXIAL RECEIVER MODULE		
510 104 155	Twinaxial Module, Receiver, 8 Position	610 113 144
TWINAXIAL ITA MODULE		
510 108 138	Twinaxial Module, ITA, 8 Position	610 113 145

Thermocouple Patchcords and Contacts

Contact Specifications

ANSI Type	K
Thermocouple Pair Materials	Chromel® Alumel®
Polarity	Chromel® + Alumel® –
Material Type	Base
TC Temperature Range	Chromel® & Alumel® –200° C to 1250° C
EMF (mV)	–5.97 to +50.63
Cycle Life	20,000 cycles

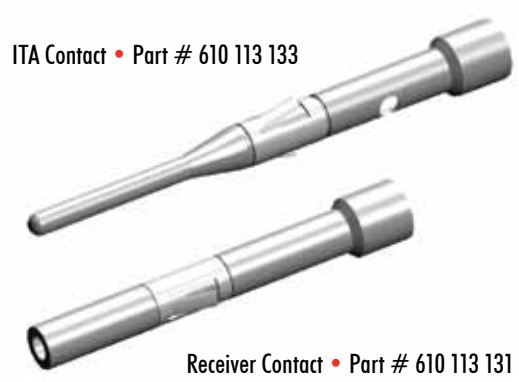

Thermocouple Receiver Patchcord	Thermocouple ITA Patchcord

Part #	Description	Used in Module
THERMOCOUPLE RECEIVER CONTACTS		
610 113 131	Thermocouple Contact, Receiver, Chromel	510 104 133/261 510 160 110
610 113 132	Thermocouple Contact, Receiver, Alumel	510 104 133/261 510 160 110
THERMOCOUPLE ITA CONTACTS		
610 113 133	Thermocouple Contact, ITA, Chromel	510 108 124/245 510 161 110
610 113 134	Thermocouple Contact, ITA, Alumel	510 108 124/245 510 161 110
NOTE: The Chromel-Alumel thermocouple is composed of a positive Chromel wire and a negative Alumel wire.		
THERMOCOUPLE RECEIVER AND ITA PATCHCORDS		
7-410 803 000-036	Thermocouple Patchcord, Receiver, 36", 24 AWG, Chromel and Alumel, Single Ended	510 104 133/261 510 160 110
7-409 803 000-036	Thermocouple Patchcord, ITA, 36", 24 AWG, Chromel and Alumel, Single Ended	510 108 124/245 510 161 110

** To instantly design patchcords online, use our Patchcord Designer at vpc.com/patchcorddesigner.*

TOOLS AND LOCATORS	
910 101 102	Tool, Crimp, 10 Amp TriPaddle, Thermocouple, Micro Power, Receiver and ITA, Locator Required
910 104 134	Tool, Locator, Thermocouple, Receiver
910 104 135	Tool, Locator, Thermocouple, ITA
910 110 102	Tool, Extraction, TriPaddle and Thermocouple, Receiver and ITA

96 Position Thermocouple Modules

Module Specifications

Material	G10 epoxy glass
Temperature	Operating • -55° C to 125° C Non-operating • -55° C to 140° C
Available Contact Positions	96
Module Positions Needed	1

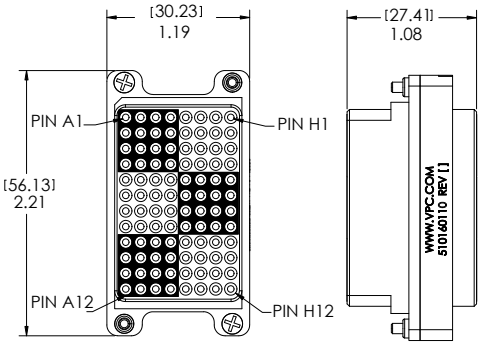

MATING SIDE

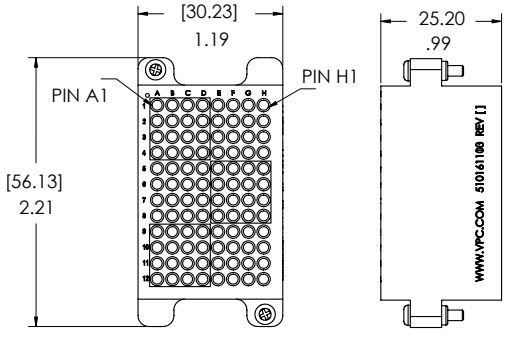

WIRING SIDE

Receiver • Part # 510 160 110 | **ITA • Part # 510 161 110**

Part #	Description	Contacts Used	
		CHROMEL	ALUMEL
ICON RECEIVER THERMOCOUPLE MODULE			
510 160 110	Thermocouple Module, Receiver, iCon, 96 Position	610 113 131	610 113 132
ICON ITA THERMOCOUPLE MODULE			
510 161 110	Thermocouple Module, ITA, iCon, 96 Position	610 113 133	610 113 134

64 Position Thermocouple Modules

Module Specifications

Material	Black PPS
Temperature	Operating • −55° C to 125° C Non-operating • −65° C to 220° C
Available Contact Positions	64
Module Positions Needed	1

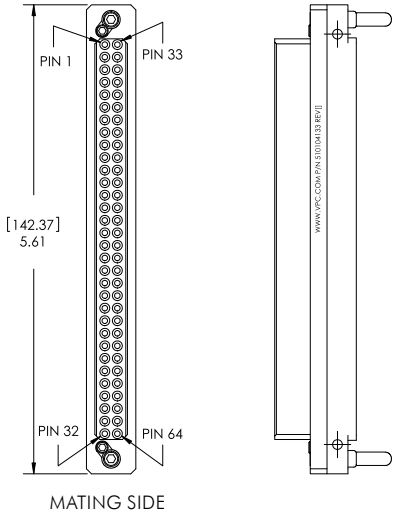

MATING SIDE

Receiver • **Part # 510 104 133**

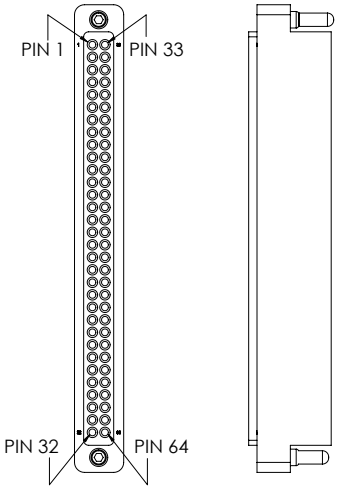

WIRING SIDE

ITA • **Part # 510 108 124**

Part #	Description	Contacts Used
THERMOCOUPLE RECEIVER MODULES AND STRAIN RELIEFS		
510 104 133	Thermocouple Module, Receiver, 64 Position	610 113 131/132
510 109 116	Strain Relief Plate for Select Receiver Modules	
THERMOCOUPLE ITA MODULES AND STRAIN RELIEFS		
510 108 124	Thermocouple Module, ITA, 64 Position	610 113 133/134
510 109 296	Strain Relief Plate for ITA Modules	

84/12 Position TriPaddle Signal/Thermocouple Modules

Module Specifications

Receiver Material	G10 epoxy
Receiver Temperature	Operating • −55° C to 125° C Non-operating • −65° C to 140° C
ITA Material	Black PPS
ITA Temperature	Operating • −55° C to 125° C Non-operating • −65° C to 225° C
Dielectric Withstanding Voltage (DWV)	1500 VDC min.
Available Contact Positions	84 signal, 12 thermocouple
Module Positions Needed	1

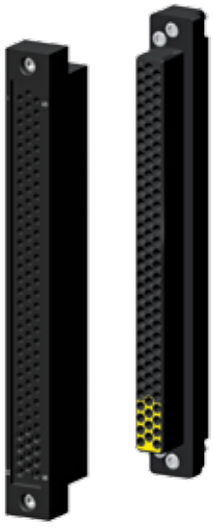

Thermocouple Contacts occupy the bottom 12 positions.

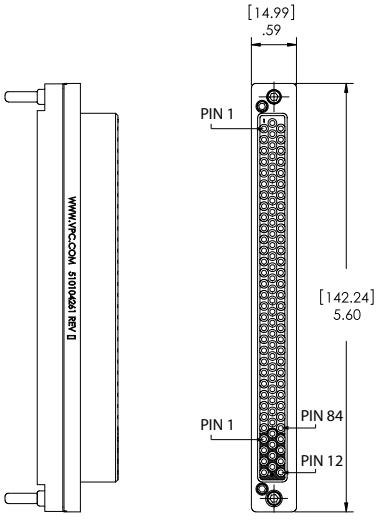

MATING SIDE

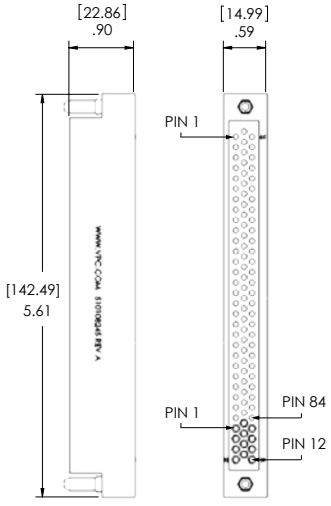

WIRING SIDE

Receiver • Part # 510 104 261 | **ITA • Part # 510 108 245**

Part #	Description	Contacts Used	
		TRIPADDLE	THERMOCOUPLE
TRIPADDLE SIGNAL/THERMOCOUPLE RECEIVER MODULES			
510 104 261	TriPaddle Signal/Thermocouple Module, Receiver, 84/12 Position	610 110 101/ 128/167/177/ 179	610 113 131/132
510 109 116	Strain Relief Plate for Select Receiver Modules		
TRIPADDLE SIGNAL/THERMOCOUPLE ITA MODULES			
510 108 245	TriPaddle Signal/Thermocouple Module, ITA, 84/12 Position	610 110 108/ 113/129/169	610 113 133/134
510 109 296	Strain Relief Plate for ITA Modules		

Mini Fiber Optic Patchcords - POF

Contact Specifications

Insertion Loss	−4.0 dB max. / mated pair
Mating Force	1.5 lbs [.68 kg]
Polymer Optical Fiber (POF)	980/1000 μ"
Contact Body Material	Nickel silver
Cycle Life	5,000 cycles

ITA Contact • Part # 610 113 171

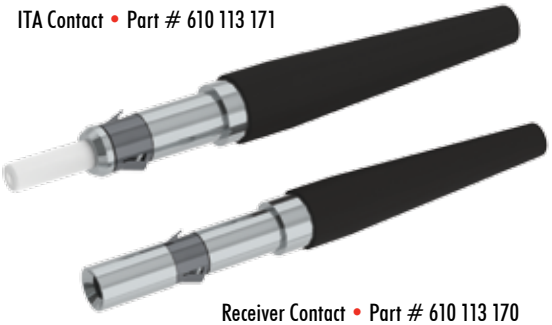

Receiver Contact • Part # 610 113 170

Fiber POF Receiver Patchcord	Fiber POF ITA Patchcord

Part #	Description	Used in Module
POLYMER OPTICAL FIBER RECEIVER PATCHCORDS		
7-414 845 000-036	Fiber Optic Patchcord, Receiver, Mini Fiber Optic, 36", Polymer Optic Fiber, Single Ended	510 104 120/150/243/301 510 160 102/103/104
7-414 845 504-036	Fiber Optic Patchcord, Receiver, Mini Fiber Optic, 36", Polymer Optic Fiber, to FC with PC Polish	510 104 120/150/243/301 510 160 102/103/104
7-414 845 510-036	Fiber Optic Patchcord, Receiver, Mini Fiber Optic, 36", Polymer Optic Fiber, to SC with PC Polish	510 104 120/150/243/301 510 160 102/103/104
POLYMER OPTICAL FIBER ITA PATCHCORDS		
7-413 845 000-036	Fiber Optic Patchcord, ITA, Mini Fiber Optic, 36", Polymer Optic Fiber, Single Ended	510 108 111/132/210/276 510 161 102/103/104
7-413 845 504-036	Fiber Optic Patchcord, ITA, Mini Fiber Optic, 36", Polymer Optic Fiber, to FC with PC Polish	510 108 111/132/210/276 510 161 102/103/104
7-413 845 510-036	Fiber Optic Patchcord, ITA, Mini Fiber Optic, 36", Polymer Optic Fiber, to SC with PC Finish	510 108 111/132/210/276 510 161 102/103/104
FIBER OPTIC ACCESSORIES		
910 112 125	Tool, Extraction, Mini Fiber Optic, Receiver and ITA	

** To instantly design patchcords online, use our Patchcord Designer at vpc.com/patchcorddesigner*

Mini Fiber Optic Patchcords - Multimode

Contact Specifications

Insertion Loss	–1.5 dB max / mated pair
Mating Force	2.8 lbs [1.3 kg]
Glass Fiber	Multimode 62.5/125
Contact Body Material	Ceramic and nickel silver
Cycle Life	5,000 cycles

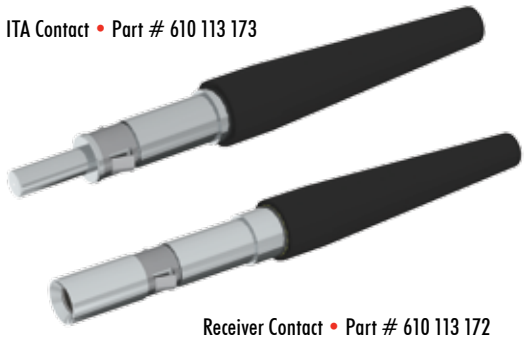

Fiber Mini Multimode Receiver Patchcord	Fiber Mini Multimode ITA Patchcord

Part #	Description	Used in Module
MINI MULTIMODE FIBER RECEIVER PATCHCORDS		
7-416 804 000-036	Fiber Optic Patchcord, Receiver, Mini Fiber Optic, 36", Multimode Glass Fiber, Single Ended	510 104 120/150/243/301 510 160 102/103/104
7-416 804 503-036	Fiber Optic Patchcord, Receiver, Mini Fiber Optic, 36", Multimode Glass Fiber, to FC with SPC Polish	510 104 120/150/243/301 510 160 102/103/104
7-416 804 506-036	Fiber Optic Patchcord, Receiver, Mini Fiber Optic, 36", Multimode Glass Fiber, to ST with SPC Polish	510 104 120/150/243/301 510 160 102/103/104
7-416 804 509-036	Fiber Optic Patchcord, Receiver, Mini Fiber Optic, 36", Multimode Glass Fiber, to SC with SPC Polish	510 104 120/150/243/301 510 160 102/103/104
7-416 804 512-036	Fiber Optic Patchcord, Receiver, Mini Fiber Optic, 36", Multimode Glass Fiber, to LC with SPC Polish	510 104 120/150/243/301 510 160 102/103/104
7-416 804 663-036	Fiber Optic Patchcord, Receiver, Mini Fiber Optic, 36", Multimode Glass Fiber, to SMA-F with SPC Polish	510 104 120/150/243/301 510 160 102/103/104
MINI MULTIMODE FIBER ITA PATCHCORDS		
7-415 804 000-036	Fiber Optic Patchcord, ITA, Mini Fiber Optic, 36", Multimode Glass Fiber, Single Ended	510 108 111/132/210/276 510 161 102/103/104
7-415 804 503-036	Fiber Optic Patchcord, ITA, Mini Fiber Optic, 36", Multimode Glass Fiber, to FC with SPC Polish	510 108 111/132/210/276 510 161 102/103/104
7-415 804 506-036	Fiber Optic Patchcord, ITA, Mini Fiber Optic, 36", Multimode Glass Fiber, to ST with SPC Polish	510 108 111/132/210/276 510 161 102/103/104
7-415 804 509-036	Fiber Optic Patchcord, ITA, Mini Fiber Optic, 36", Multimode Glass Fiber, to SC with SPC Polish	510 108 111/132/210/276 510 161 102/103/104
7-415 804 512-036	Fiber Optic Patchcord, ITA, Mini Fiber Optic, 36", Multimode Glass Fiber, to LC with SPC Polish	510 108 111/132/210/276 510 161 102/103/104
7-415 804 663-036	Fiber Optic Patchcord, ITA, Mini Fiber Optic, 36", Multimode Glass Fiber, to SMA-F with SPC Polish	510 108 111/132/210/276 510 161 102/103/104
FIBER OPTIC ACCESSORIES		
910 112 125	Tool, Extraction, Mini Fiber Optic, Receiver and ITA	
910 121 192	Tool, Fiber Optic Cleaning Pen, Multimode Glass Fiber, Receiver/ITA	

Pneumatic Contacts

Contact Specifications • 1/4" Flow [6.4 mm]

Pressure/Vacuum Rated	250 psi (17.3 Bar)
Temperature	−40°F to 180°F (−40°C to 82°C)
Contact Body Material	Chrome-plated brass
Mating Force	9.4 lbs typical [4.26 kg]
Cycle Life	20,000 cycles

Contact Specifications • 1/8" Flow [3.2 mm]

Pressure/Vacuum Rated	100 psi (6.9 Bar)
Temperature	−40°F to 180°F (−40°C to 82°C)
Contact Body Material	Delrin®
Mating Force	1.5 lbs typical [.68 kg]
Cycle Life	20,000 cycles

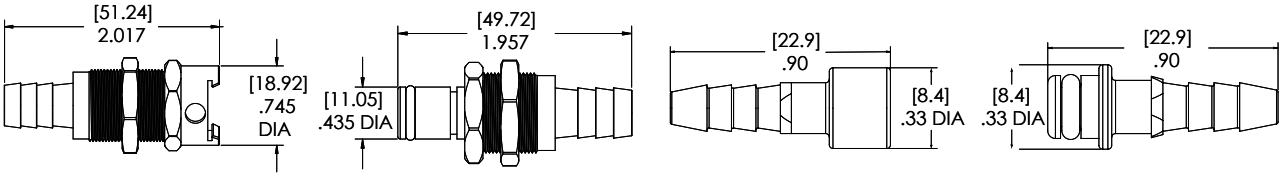

Part # 610 131 104	Part # 610 132 104	Part # 610 132 105 Part # 610 131 107	Part # 610 131 106

Part #	Description	Used in Module
PNEUMATIC RECEIVER CONTACTS		
610 131 101	Pneumatic Contact, Receiver, Ferruless Fitting, for 3/8" OD, .250" ID [9.5 x 6 mm] Tubing	510 104 160/276
610 131 104	Pneumatic Contact, Receiver, Hose Barb, for 3/8" ID [9.5 mm] Tubing	510 104 160/276
610 131 106	Pneumatic Contact, Receiver, Hose Barb, for 1/8" ID [3.2 mm] Tubing	510 104 185
PNEUMATIC ITA CONTACTS		
610 132 101	Pneumatic Contact, ITA, Ferruless Fitting, for 3/8" OD, .250" ID [9.5 x 6 mm] Tubing	510 108 144/264
610 132 104	Pneumatic Contact, ITA, Hose Barb, for 3/8" ID [9.5 mm] Tubing	510 108 144/264
610 132 105	Pneumatic Contact, ITA, Hose Barb, for 1/8" ID [3.2 mm] Tubing	510 108 160
PNEUMATIC CONTACT WITH VALVE		
610 131 107*	Pneumatic Contact (with valve), Hose Barb, for 1/8" ID [4 mm] Tubing	510 104 185 510 108 160

** This contact mates with contact Part # 610 131 106. It can be used in either the ITA or receiver module, however the mating module must be the opposite.*

5 and 10 Position Pneumatic Modules

Module Specifications

Material	G10 epoxy glass
Temperature	Operating • −55° C to 125° C Non-operating • −65° C to 140°C
Available Contact Positions	5 (⅜" ID) 10 (⅛" ID)
Module Positions Needed	2 (⅜" ID), 1 (⅛" ID)

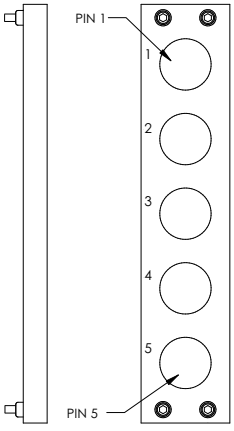

Receiver
Part # 510 104 160

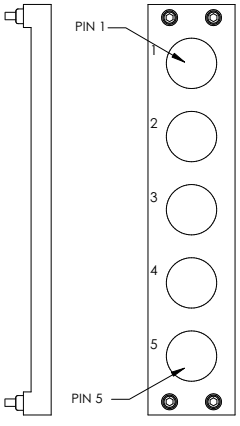

ITA
Part # 510 108 144

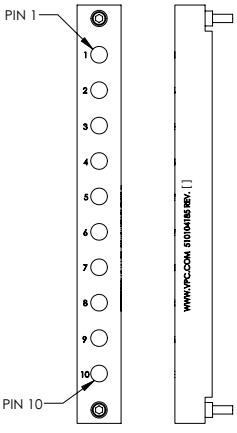

Receiver
Part # 510 104 185

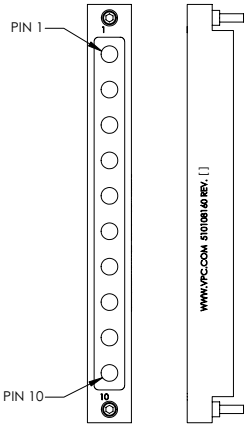

ITA
Part # 510 108 160

Part #	Description	Contacts Used
PNEUMATIC RECEIVER MODULES - 5 AND 10 POSITION		
510 104 160	Pneumatic Module, Receiver, 5 Position (3/8" Flow)	610 131 101/104
510 104 185	Pneumatic Module, Receiver, 10 Position (1/8" Flow)	610 131 106/107
PNEUMATIC ITA MODULES - 5 AND 10 POSITION		
510 108 144	Pneumatic Module, ITA, 5 Position (3/8" Flow)	610 132 101/104
510 108 160	Pneumatic Module, ITA, 10 Position (1/8" Flow)	610 132 105 610 131 106 610 131 107

Mini Pneumatic Contacts

Contact Specifications • .075" Flow [1.9 mm]

Pressure/Vacuum Rated	100 psi (6.9 bar)
Contact Body Material	Nickel plated brass
Cycle Life	20,000 cycles

ITA Contact • Part # 610 132 106

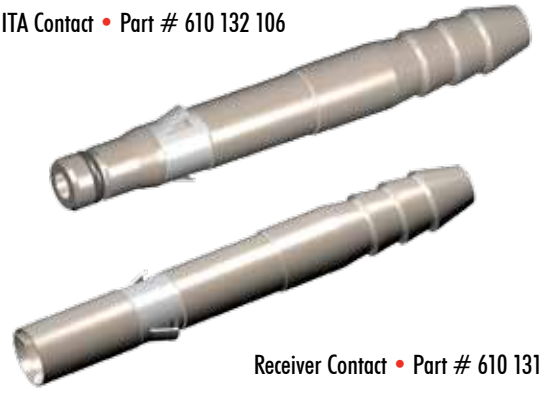

Receiver Contact • Part # 610 131 108

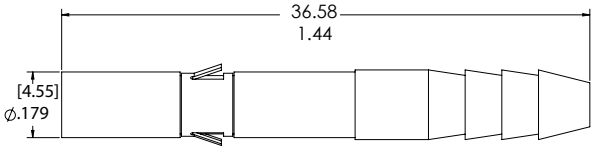

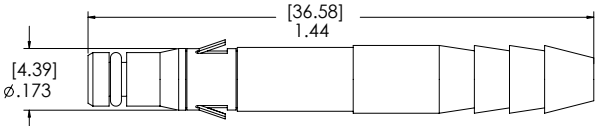

Receiver • **Part # 610 131 108**

ITA • **Part # 610 132 106**

Part #	Description	Used in Module
MINI PNEUMATIC RECEIVER CONTACT		
610 131 108	Mini Pneumatic Contact, Receiver, Hose Barb for 0.125" [3.2mm] ID Tubing, Fits Mini Coaxial or Mini Power Modules	510 104 123 510 104 206 510 104 120 510 104 150 510 104 243 510 160 102/103/104
MINI PNEUMATIC ITA CONTACT		
610 132 106	Mini Pneumatic Contact, ITA, Hose Barb for 0.125" [3.2mm] ID Tubing, Fits Mini Coaxial or Mini Power Modules	510 108 115 510 108 178 510 108 111 510 108 132 510 108 210 510 161 102/103/104
EXTRACTION TOOL		
910 112 104	Tool, Extraction, Mini Power/Mini Coaxial Contacts, Receiver and ITA	

2 Port Vacuum Modules

Module Specifications

Material	Black anodized aluminum
Temperature	–65° C to 200° C
Available Vacuum Positions	2
Module Positions Needed	2

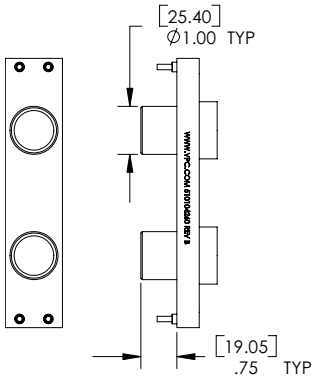

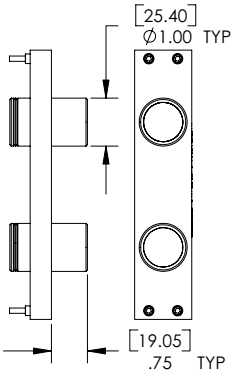

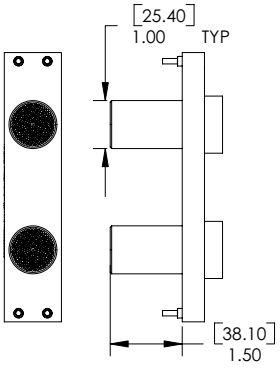

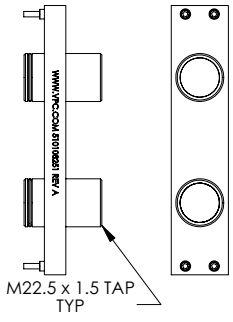

Receiver	ITA	Receiver	ITA
Part # 510 104 260	**Part # 510 108 242**	**Part # 510 104 266**	**Part # 510 108 251**

Part #	Description

VACUUM RECEIVER MODULES

510 104 260	Vacuum Module, Receiver, 2 Port Positions
510 104 266	Vacuum Module, Receiver, 2 Port Positions with Filter

VACUUM ITA MODULES

510 108 242	Vacuum Module, ITA, 2 Port Positions
510 108 251	Vacuum Module, ITA, 2 Port Positions with M22.5 x 1.5 Tap

Vacuum-Pneumatic Modules

Module Specifications

Material	Black anodized aluminum
Temperature	–65° C to 200° C
Available Vacuum Positions	1
Available Pneumatic Positions	2
Module Positions Needed	2

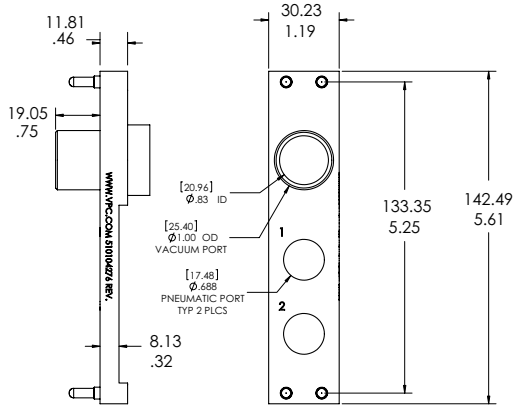

Receiver • **Part # 510 104 276**

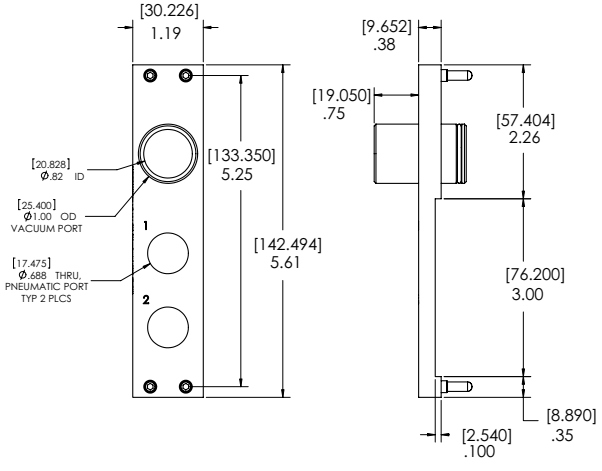

ITA • **Part # 510 108 264**

Part #	Description	Contacts Used
VACUUM-PNEUMATIC RECEIVER MODULE		
510 104 276	Vacuum-Pneumatic Module, Receiver, 1-2 Position	610 131 101/104
VACUUM-PNEUMATIC ITA MODULE		
510 108 264	Vacuum-Pneumatic Module, ITA, 1-2 Position	610 132 101/104

Blank Modules

Module Specifications

Material	Black-PEI (Part # 510 104 118) Black anodized aluminum
Temperature	Black-PEI: operating • −65° C to 125° C Black anodized aluminum: operating • −55° C to 125° C

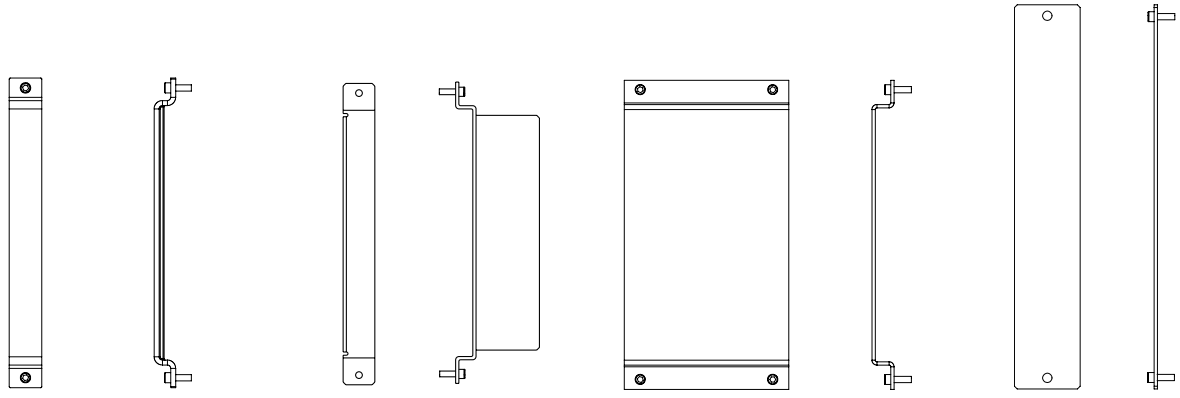

Part # 510 104 118	Part # 510 104 129	Part # 510 104 144	Part # 510 104 178

Part #	Description
BLANK RECEIVER/ITA MODULES	
510 104 118	Blank Module, Receiver/ITA, 1 Module Position
510 104 129	Blank Shielding Module, Receiver/ITA, 1 Module Position
510 104 144	Blank Module, Receiver/ITA, 5 Module Positions
510 104 178	Blank Module, VXI Receiver, 2 Module Positions*

** Part # 510 104 178 does not require VXI module retainer blocks to mount to the inner frame of the VXI receiver.*

Cable Management

VPC solutions are designed to accommodate an array of ATE chassis sizes/configurations, including PXI, SCXI, GPIB, LXI, PCI, VXI and AXIe applications. These solutions are available in various wired configurations, including direct panel mount, slide mount, and Vertical Hinged Mounting Frame. Regardless of the type of configuration you choose, cable routing and strain relief are important considerations to make in managing your cabling.

For more detailed cable management information, visit **vpc.com/cable** or contact VPC to discuss your cable management needs with an application engineer.

Strain Relief

With any configuration type, strain relief is critical in developing a reliable and consistent tester. VPC offers several strain relief options.

Module Strain Relief: The most common method is to attach strain relief plates directly to the modules (**Figure 1**). Wire or cable bundles are secured to the plate with wire ties, preventing forces exerted on the cables from transferring directly to the contact termination which can cause damage and loss of signal integrity.

Figure 1 *Module Strain Relief*

Figure 2 *Cable Tie Down Bar on Instrument Bracket*

Cable Tie Down Bar: A second method is to use cable tie-down bars on the receiver side. These bars are included with the Vertical Hinged Mounting Frames and are designed into the instrument bracket or cable tray kits used with slide mount receivers (**Figure 2**).

When slide mounting your receiver, cables connecting to the receiver should be secured to the strain relief on the instrument bracket. This prevents the cables from being damaged when the slides are extended. Cables routed to instrumentation not placed on the instrument bracket should be secured to the strain relief on the instrument bracket.

Cable Management

Measuring and Routing Cable

Direct Panel Mount

Direct panel mount systems enable the instrument chassis to be placed directly behind the VPC receiver. When using the direct panel mount method, keep a space of 8-10" from the front of the chassis to prevent tight bends in the cable. To determine the proper cable length required, measure the distance from the front face of the instrument to the module location in the receiver, allowing for bends in the cable for proper cable routing.

Slide Mount

Slide mount configurations, popular for use with PXI-based testers, offer short cable lengths, easy access to instrumentation, and the ability to connect to secondary instrumentation. In addition, the cabling remains static and electrically consistent when accessing instrumentation.

When slide mounting your receiver, consider whether or not the instrument chassis will be placed on an instrument bracket. The recommended cable length is 20" when the instrument bracket is used with a slide mounted receiver. This length can change if the instrument is being wired to a receiver module on the opposite side of the tester (**Figure 3**).

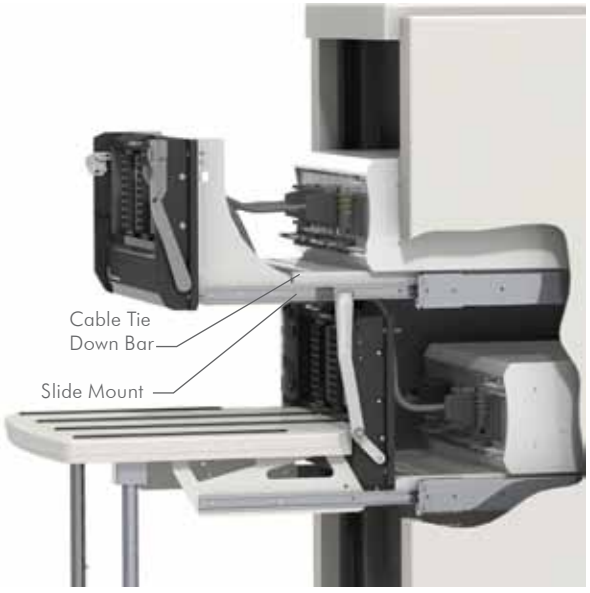

Figure 3 *Slide Mount Configuration Routing.*

The cables used to connect the instrumentation located somewhere other than the instrument bracket to the receiver must be long enough to allow the slides to extend fully without putting tension on the cables (**Figure 3**). To determine the appropriate cable length, measure the vertical distance from the receiver to the instrument, then measure the distance from the front of the rack to the receiver with the slides fully extended, taking any bends and special routing into consideration.

Vertical Hinged Mounting Frame

Vertical Hinged Mounting Frames (VHMF) enable the instrument chassis to be placed directly behind the VHMF. When using a VHMF, keep a space of 8-10" from the front of the chassis to prevent tight bends in the cables when the VHMF is closed. To determine the proper cable length required, measure the distance from the front face of the instrument to the module location in the receiver with the VHMF in the "open" position (**Figure 4**), allowing for bends in the cable for proper cable routing and allowing extra length in the cable to prevent tight bends when the VHMF is closed.

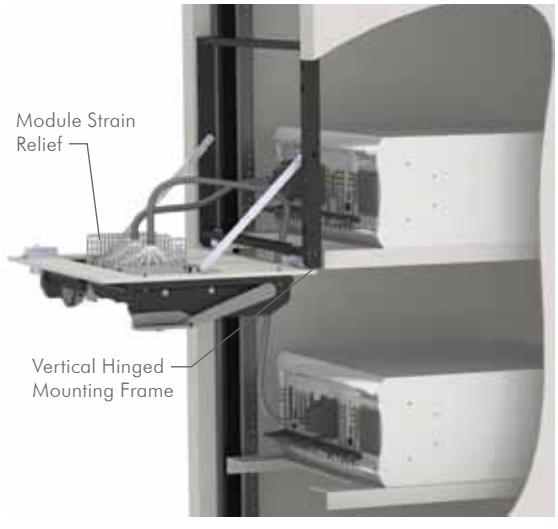

Figure 4 *Vertical Hinged Mounting Frame Configuration.*

vpc.com/cable

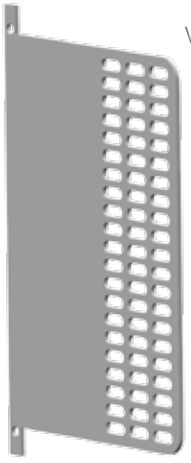

Works with receiver modules:
510 104 102
510 104 120
510 104 123
510 104 133
510 104 134
510 104 136
510 104 149
510 104 206
510 104 243
510 104 261
510 104 306

Strain Relief Plate for Select Receiver Modules
Part # 510 109 116

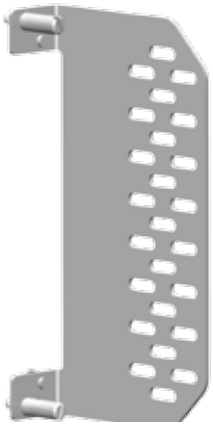

Designed to support the Racal "Adapt-a-Switch" and the VTI Instruments SMIP II instrumentation cards

Strain Relief Plate for 160 Pin DIN VXI Connectors
Part # 510 109 338

Works with QuadraPaddle receiver modules:
510 150 130
510 150 115

Strain Relief Plate for QuadraPaddle 192 Position Receiver Modules • **Part # 510 109 349**

Works with QuadraPaddle receiver modules:
510 150 131
510 150 116

Strain Relief Plate for QuadraPaddle 480 Position Receiver Modules • **Part # 510 109 348**

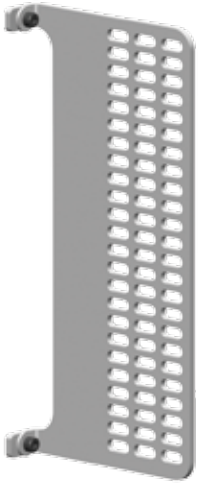

Works with all receiver modules

Strain Relief Plate for Receiver Modules
Part # 510 109 298

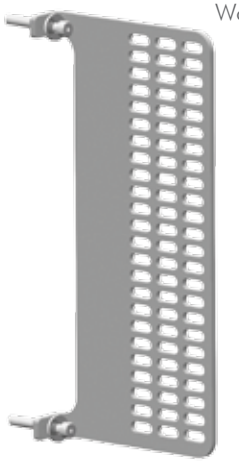

Works with all ITA modules

NOTE: Plate is not needed for ITAs with cable clamps

Strain Relief Plate for ITA Modules
Part # 510 109 296

Cross Reference for Receivers with Platforms Accessories

ACCESSORIES	S6 RECEIVER 310 122 100	15" S6 RECEIVER 310 122 101	20" S6 RECEIVER 310 122 108	15" G12 RECEIVER 310 104 325	20" G12 RECEIVER 310 104 334	15" G12X RECEIVER 310 104 386	20" G12X RECEIVER 310 104 385	G20 RECEIVER 310 120 188(193)	G20X RECEIVER 310 120 186(183)	20" 9025TR 310 104 435	20" 9050TR 310 104 369
CABLE TRAY - 310 113 424		X	X	X	X	X	X			X	
KEYBOARD TRAY KIT 310 113 439		X	X	X	X	X	X			X	X
ADJUSTABLE LEG KIT 310 113 566			X		X		X			X	X
INSTRUMENT BRACKET KIT WITH STRAIN RELIEF * - 310 113 453		X	X	X	X	X	X			X	
RACK EXTENDER KIT, S6 310 113 430	X	X	X								
RACK EXTENDER KIT, G12 310 113 406				X	X						
RACK EXTENDER KIT, G12X 310 113 519						X	X				
GAP COVER ** - 310 113 433				X	X	X	X				
15" PLATFORM KIT - 310 113 435	X										
20" PLATFORM KIT - 310 113 525	X										
RACK EXTENDER KIT, 9025TR 310 113 494										X	
24" SLIDE KIT - 310 113 410		X	X	X	X	X	X	X	X		
28" SLIDE KIT - 310 113 451		X	X	X	X	X	X	X	X	X	X
30" SLIDE KIT - 310 113 411		X	X	X	X	X	X	X	X	X	X
36" SLIDE KIT - 310 113 500		X	X	X	X	X	X	X	X	X	X
ADAPTER PLATE FOR ICON MODULES - 310 113 606									X		
MOUNTING FLANGE KIT, NI PXI-1045 - 310 113 622								X	X		
MOUNTING FLANGE KIT, PICKERING 40-923 - 310 113 644								X	X		
MOUNTING FLANGE KIT, KEYSIGHT M9018A - 310 113 622								X	X		

NOTES:

* The instrument bracket kit is incompatible with the cable tray.

**The gap cover is incompatible when using a rack extender kit.

Cross Reference for Module Screw Sizes

Module Part #	SOCKETHEAD 4-40 X .56 SST	SOCKETHEAD 4-40 X .625 SST	SOCKETHEAD 4-40 X .750 SST	SOCKETHEAD CAPTIVE 4-40 X .562 SS	FLATHEAD 2-56 X .5 SST
510 104 109		X			
510 104 118					
510 104 120					
510 104 123					
510 104 128		X			X
510 104 133		X			
510 104 134		X			
510 104 135		X			
510 104 136		X			
510 104 139		X			
510 104 149		X			
510 104 150	X				
510 104 155	X				
510 104 160	X				
510 104 185		X			
510 104 187		X			
510 104 206		X			
510 104 224		X			
510 104 243		X			
510 104 249			X		
510 104 251			X		
510 104 260			X		
510 104 261		X			
510 104 266			X		
510 104 267	X				
510 104 270	X				
510 104 307				X	
510 108 101	X				
510 108 111	X				
510 108 112	X				
510 108 115	X				
510 108 124	X				
510 108 125	X				
510 108 126	X				
510 108 131	X				
510 108 132	X				

Cross Reference for Module Screw Sizes, cont.

Module Part #	SOCKETHEAD 4-40 X .56 SST	SOCKETHEAD 4-40 X .625 SST	SOCKETHEAD 4-40 X .750 SST	SOCKETHEAD CAPTIVE 4-40 X .562 SST	FLATHEAD 2-56 X .5 SST
510 108 138	X				
510 108 140	X				
510 108 144		X			
510 108 148	X				
510 108 160		X			
510 108 169		X			
510 108 178	X				
510 108 179		X			
510 108 210	X				
510 108 242			X		
510 108 245	X				
510 108 251			X		
510 108 262	X		X		
510 108 263	X				
510 108 264		X			
510 108 281				X	
510 150 115			X		
510 150 116			X		
510 150 130			X		
510 150 131			X		
510 150 135			X		
510 150 136			X		
510 150 137			X		
510 150 147			X		
510 151 105			X		
510 151 106		X			
510 151 107		X			
510 151 108		X			
510 151 121					X
510 151 124		X			
510 170 101				X	
510 171 101				X	

Cross Reference for 90 Series Receiver Contacts and Receiver Modules

RECEIVER CONTACTS	RECEIVER MODULES																																		
	510 104 120	510 104 123	510 104 133	510 104 134	510 104 136	510 104 149	510 104 150	510 104 155	510 104 160	510 104 185	510 104 206	510 104 224	510 104 243	510 104 249	510 104 251	510 104 261	510 104 267	510 104 270	510 104 276	510 104 287	510 104 289	510 104 301	510 104 306	510 104 307	510 150 115	510 150 116	510 150 130	510 150 131	510 150 135	510 150 136	510 150 137	510 150 147	510 170 101	510 180 101
610 102 109																					X													
610 102 114												X																						
610 102 116															X																			
610 102 119															X						X													
610 102 133															X																			
610 102 135																				X														
610 104 114	X						X						X									X												
610 104 140	X						X						X																					
610 104 141	X						X						X									X												
610 104 142	X						X						X																					
610 104 149	X						X						X																					
610 104 157														X																				
610 110 101				X	X	X					X		X			X							X	X										
610 110 128				X	X	X					X		X			X							X	X										
610 110 167				X	X	X					X		X			X							X	X										
610 110 177				X	X	X					X		X			X							X	X										
610 110 179				X	X	X					X		X			X							X	X										
610 113 131			X													X																		
610 113 132			X													X																		
610 113 144								X																										
610 113 170	X						X						X									X												
610 113 172	X						X						X									X												
610 116 112		X									X																							
610 131 101									X										X															
610 131 104									X										X															
610 131 107										X																								
610 131 108	X	X					X				X		X																					
610 132 105										X																								
610 138 117*																											X	X	X		X			
610 138 118*																											X	X		X		X		
610 138 200																											X	X	X		X			
610 138 216																									X	X								X
610 140 101																	X	X					X											
610 140 102																	X	X					X											
610 140 103																	X	X					X											
610 140 104																	X	X					X											
610 142 101																	X	X					X											
610 142 102																	X	X					X											
610 149 101																								X										
610 151 101																																	X	
610 151 103																																	X	

** Must be used with 610 138 200*

Cross Reference for 90 Series ITA Contacts and ITA Modules

ITA CONTACTS	ITA MODULES																												
	510 108 101	510 108 111	510 108 115	510 108 124	510 108 126	510 108 131	510 108 132	510 108 138	510 108 144	510 108 160	510 108 169	510 108 178	510 108 179	510 108 210	510 108 240	510 108 245	510 108 262	510 108 263	510 108 264	510 108 276	510 108 278	510 108 281	510 151 105	510 151 106	510 151 107	510 151 108	510 151 124	510 151 127	510 171 101
610 102 110													X																
610 102 114											X																		
610 102 117													X																
610 102 118													X																
610 102 132													X																
610 102 134															X														
610 103 115		X					X							X						X									
610 103 129		X					X							X															
610 103 130		X					X							X						X									
610 103 136		X					X							X						X									
610 103 140		X					X							X															
610 103 152		X					X							X															
610 103 150		X					X							X															
610 103 161		X					X							X						X									
610 103 169													X																
610 103 172		X					X							X						X									
610 103 184		X					X							X						X									
610 110 108	X				X	X						X		X		X					X	X							
610 110 113	X				X	X						X		X		X					X	X							
610 110 129	X				X	X						X		X		X					X	X							
610 110 169	X				X	X						X		X		X					X	X							
610 113 133				X												X													
610 113 134				X												X													
610 113 145								X																					
610 113 171		X					X							X						X									
610 113 173		X					X							X						X									
610 115 124			X									X																	
610 115 125			X									X																	
610 132 101									X										X										
610 132 104									X										X										
610 132 105										X																			
610 132 106		X	X				X					X		X															
610 138 109																							X	X					
610 138 112																							X	X					
610 138 115																							X	X	X	X			
610 138 122																							X	X			X	X	
610 141 101																	X	X			X								
610 141 102																	X	X			X								
610 141 103																	X	X			X								
610 141 104																	X	X			X								
610 143 101																	X	X			X								
610 150 101																						X							
610 151 101																													X

Cross Reference for iCon Receiver Contacts and Receiver Modules

RECEIVER CONTACTS	RECEIVER MODULES																
	510 160 101	510 160 102	510 160 103	510 160 104	510 160 105	510 160 106	510 160 107	510 160 108	510 160 109	510 160 110	510 160 111	510 160 112	510 160 113	510 160 114	510 160 115	510 160 122	510 160 124
610 102 119														X	X		
610 102 133														X	X		
610 104 114		X	X	X													
610 104 140		X	X	X													
610 104 141		X	X	X													
610 104 142		X	X	X													
610 104 149		X	X	X													
610 110 101			X					X	X		X				X		X
610 110 128			X					X	X		X				X		X
610 110 167			X					X	X		X				X		X
610 110 177			X					X	X		X				X		X
610 110 179			X					X	X		X				X		X
610 113 131										X							
610 113 132										X							
610 113 144									X								
610 113 170		X	X	X													
610 113 172		X	X	X													
610 116 112		X	X	X													
610 131 108		X	X	X													
610 138 117*					X							X	X			X	
610 138 118*					X							X					
610 138 200					X							X	X			X	
610 138 216	X	X					X										
610 140 101						X	X				X	X	X				
610 140 102						X	X				X	X	X				
610 140 103						X	X				X	X	X				
610 140 104						X	X				X	X	X				
610 142 101						X	X				X	X	X				
610 142 102						X	X				X	X	X				
610 149 101																	X

** Must be used with 610 138 200*

Cross Reference for iCon ITA Contacts and ITA Modules

ITA CONTACTS	ITA MODULES												
	510 161 101	510 161 102	510 161 103	510 161 104	510 161 106	510 161 107	510 161 108	510 161 109	510 161 110	510 161 111	510 161 114	510 161 115	510 161 124
610 102 118											X	X	
610 102 132											X	X	
610 103 115		X	X	X									
610 103 129		X	X	X									
610 103 130		X	X	X									
610 103 136		X	X	X									
610 103 140		X	X	X									
610 103 150		X	X	X									
610 103 152		X	X	X									
610 103 161		X	X	X									
610 103 172		X	X	X									
610 103 184		X	X	X									
610 110 108			X				X	X		X		X	
610 110 113			X				X	X		X		X	
610 110 129			X				X	X		X		X	
610 110 169			X				X	X		X		X	
610 113 133									X				
610 113 134									X				
610 113 145								X					
610 113 171		X	X	X									
610 113 173		X	X	X									
610 115 124		X	X	X									
610 115 125		X	X	X									
610 132 106		X	X	X									
610 138 109	X	X				X							
610 138 112	X	X				X							
610 138 115	X	X				X							
610 138 122	X	X				X							
610 141 101					X	X				X			
610 141 102					X	X				X			
610 141 103					X	X				X			
610 141 104					X	X				X			
610 143 101					X	X				X			
610 150 101													X

Cross Reference for Receiver Contacts and Tools

		RECEIVER CONTACTS																														
		610 102 109	610 102 116	610 102 119	610 102 133	610 104 114	610 104 140	610 104 141	610 104 142	610 104 149	610 104 157	610 110 101	610 110 128	610 110 167	610 110 177	610 110 179	610 113 131	610 113 132	610 113 170	610 113 172	610 116 112	610 131 108	610 138 216	610 140 101	610 140 102	610 140 103	610 140 104	610 142 101	610 142 102	610 149 101	610 151 101	610 151 103
CRIMP TOOLS AND LOCATORS	910 101 102												X		X		X	X										X				
	910 101 103											X		X		X																
	910 101 115					X		X		X																						
	910 101 124	X	X																													
	910 101 125																						X									
	910 101 131																								X							
	910 101 132																							X		X						
	910 102 106										X																					
	910 102 116																													X		
	910 102 117																													X		
	910 104 116												X																			
	910 104 127											X		X		X																
	910 104 134																X	X														
	910 104 139				X						X																					
	910 104 145																											X				
	910 104 146												X		X																	
EXTRACTION	910 110 102											X	X	X	X	X	X	X														
	910 110 112																						X									
	910 112 104					X	X	X	X	X											X	X										
	910 112 117	X	X	X	X						X																					
	910 112 123																							X	X	X	X	X	X			
	910 112 125																		X	X												
	910 112 129																													X		
	910 112 130																														X	X
MISCELLANEOUS	910 121 119					X		X																								
	910 121 131					X	X	X	X	X																						
	910 121 143					X		X		X																						
	910 121 144								X																							
	910 121 149								X																							
	910 121 156					X	X	X	X	X																						
	910 121 160								X																							
	910 121 167								X																							
	910 121 170																		X	X												
	910 121 178																							X	X	X	X					
	910 121 179																							X	X	X	X					
	910 121 192																			X												

Cross Reference for ITA Contacts and Tools

ITA CONTACTS	CRIMP TOOLS AND LOCATORS																	EXTRACTION									MISCELLANEOUS																	
	910 101 102	910 101 103	910 101 115	910 101 118	910 101 124	910 101 131	910 101 132	910 102 107	910 102 116	910 102 117	910 104 107	910 104 118	910 104 128	910 104 135	910 104 139	910 104 140	910 104 144	910 110 102	910 110 111	910 112 104	910 112 117	910 112 123	910 112 127	910 112 129	910 112 130	910 113 106	910 112 125	910 121 126	910 121 142	910 121 144	910 121 149	910 121 155	910 121 157	910 121 160	910 121 167	910 121 170	910 121 178	910 121 180	910 121 192
610 102 110					X																X																						
610 102 117					X																X																						
610 102 118																					X																						
610 102 132															X						X																						
610 103 115			X																	X							X	X			X	X										
610 103 129																				X							X	X			X	X										
610 103 130			X																	X							X	X			X	X										
610 103 136				X									X							X							X	X			X	X										
610 103 140																				X							X	X	X	X	X	X	X	X								
610 103 150																				X							X	X			X	X										
610 103 152			X																	X							X	X			X	X										
610 103 161			X	X									X							X							X	X			X	X										
610 103 169								X							X						X																						
610 103 172				X									X							X																						
610 103 184			X	X									X							X																						
610 110 108		X									X							X																								
610 110 113																		X																								
610 110 129	X											X						X																								
610 110 169		X									X							X																								
610 113 133	X													X				X																								
610 113 134	X													X				X																								
610 113 171																											X								X							
610 113 173																											X								X							X
610 115 124																				X																						
610 115 125																				X																						
610 132 106																				X																						
610 138 109		X														X			X																							
610 138 112		X														X			X																							
610 138 115																			X																							
610 138 122																			X							X																
610 141 101							X															X	X														X	X			
610 141 102						X																X	X														X	X			
610 141 103							X															X	X														X	X			
610 141 104																						X	X														X	X			
610 143 101	X																X					X																				
610 150 101									X	X														X																		
610 151 101																									X																	

Cross Reference for Mating Contacts

	ITA CONTACTS																																							
RECEIVER CONTACTS	610 102 110	610 102 114	610 102 117	610 102 118	610 102 132	610 102 134	610 103 115	610 103 129	610 103 130	610 103 136	610 103 140	610 103 150	610 103 152	610 103 161	610 103 169	610 103 184	610 110 108	610 110 113	610 110 129	610 110 169	610 113 133	610 113 134	610 113 145	610 113 171	610 113 173	610 115 124	610 115 125	610 131 106	610 132 101	610 132 104	610 132 106	610 138 109	610 138 112	610 138 115	610 143 101	610 141 101	610 141 102	610 141 103	610 141 104	610 150 101
610 102 109	X																																							
610 102 114		X																																						
610 102 116			X																																					
610 102 119				X		X																																		
610 102 133					X																																			
610 102 135	X			X		X																																		
610 104 114							X	X	X	X	X	X		X		X																								
610 104 140							X	X	X	X	X	X		X		X																								
610 104 141							X	X	X	X	X	X		X		X																								
610 104 142							X	X	X	X	X	X		X		X																								
610 104 149													X																											
610 104 157															X																									
610 104 160							X	X	X	X	X	X		X																										
610 110 101																	X	X	X	X																				
610 110 128																	X	X	X	X																				
610 110 167																	X	X	X	X																				
610 110 177																	X	X	X	X																				
610 110 179																	X	X	X	X																				
610 113 131																					X																			
610 113 132																						X																		
610 113 144																							X																	
610 113 170																								X																
610 113 172																									X															
610 116 112																										X	X													
610 131 101																													X											
610 131 104																														X										
610 131 107																												X												
610 131 108																															X									
610 132 105																												X												
610 138 200																																X	X	X						
610 138 216																																X	X							
610 142 101																																			X					
610 142 102																																			X					
610 140 101																																				X				
610 140 102																																					X			
610 140 103																																						X		
610 140 104																																							X	
610 149 101																																								X

Cross Reference for Mating Contacts

	ITA CONTACTS																																							
RECEIVER CONTACTS	610 102 110	610 102 114	610 102 117	610 102 118	610 102 132	610 102 134	610 103 115	610 103 129	610 103 130	610 103 136	610 103 140	610 103 150	610 103 152	610 103 161	610 103 169	610 103 184	610 110 108	610 110 113	610 110 129	610 110 169	610 113 133	610 113 134	610 113 145	610 113 171	610 113 173	610 115 124	610 115 125	610 131 106	610 132 101	610 132 104	610 132 106	610 138 109	610 138 112	610 138 115	610 143 101	610 141 101	610 141 102	610 141 103	610 141 104	610 150 101
610 102 109	X																																							
610 102 114		X																																						
610 102 116			X																																					
610 102 119				X		X																																		
610 102 133					X																																			
610 102 135	X			X		X																																		
610 104 114							X	X	X	X	X	X		X		X																								
610 104 140							X	X	X	X	X	X		X		X																								
610 104 141							X	X	X	X	X	X		X		X																								
610 104 142							X	X	X	X	X	X		X		X																								
610 104 149													X																											
610 104 157															X																									
610 104 160							X	X	X	X	X	X		X																										
610 110 101																	X	X	X	X																				
610 110 128																	X	X	X	X																				
610 110 167																	X	X	X	X																				
610 110 177																	X	X	X	X																				
610 110 179																	X	X	X	X																				
610 113 131																					X																			
610 113 132																						X																		
610 113 144																							X																	
610 113 170																								X																
610 113 172																									X															
610 116 112																										X	X													
610 131 101																													X											
610 131 104																														X										
610 131 107																												X												
610 131 108																															X									
610 132 105																												X												
610 138 200																																X	X	X						
610 138 216																																X	X							
610 142 101																																			X					
610 142 102																																			X					
610 140 101																																				X				
610 140 102																																					X			
610 140 103																																						X		
610 140 104																																							X	
610 149 101																																								X

Part #	Description	Page Number
111 107 138	Edge Card Adapter, Universal, for .062 PCB	176
111 107 148	Edge Card Adapter, for .093 PCB	176
310 104 127	Receiver, 9025, 25 Module VXI, C-Size Interlocking	153, 158
310 104 248	Receiver, 9050, 50 Module, VXI and Discrete Wiring, Double Tier	163, 166
310 104 317	Receiver, G10, 10 Module	89, 91
310 104 318	Receiver, G6, 6 Module with Keying Feature	83, 84
310 104 325	Receiver, G12, 12 Module with 15" Platform, for Slide Mount (slide kit required)	105
310 104 334	Receiver, G12, 12 Module with 20" Platform, for Slide Mount (slide kit required)	105, 106
310 104 344	Receiver, G6, 6 Module with Keying Feature and EMI Gasket	83
310 104 360	Receiver, 10 Module with 4.34" [110.24 mm] Extended Handle	89
310 104 366	Receiver, G10, 10 Module, EMI Gask	89
310 104 368	Receiver, 9050, 50 Module, Dual Discrete Wiring Tiers	135, 167
310 104 369	Receiver, 9050, 50 Module, with 20" Platform (slide kit required)	165, 169
310 104 385	Receiver, G12x, 18 Module, with 20" Platform, for Slide Mount (slide kit required)	109, 110
310 104 386	Receiver, G12x, 18 Module, with 15" Platform, for Slide Mount (slide kit required)	109
310 104 402	Receiver, 9050, 50 Module, with Slide Mounting Kit (slide kit required)	164, 168
310 104 408	Receiver, G12, 12 Module with 15" Platform for Tabletop	105
310 104 409	Receiver, G12, 12 Module with 20" Platform for Tabletop	105
310 104 410	Receiver, G12x, 18 Module with 15" Platform for Tabletop	109
310 104 411	Receiver, G12x, 18 Module with 20" Platform for Tabletop	109
310 104 419	Receiver, 2 G6, 6 Module with Slide Mounting (Sliide Kit Required)	83
310 104 420	Receiver, 9025, 25 Module, Single Tier	149, 154
310 104 431	Receiver, 9025, 25 Module, EMI Gasket	149
310 104 435	Receiver, 9025TR, 25 Module, with 20" Platform (slide kit required)	151, 156
310 104 436	Receiver, 9025TR, 25 Module, with 20" Platform, For Tabletop	151, 157
310 104 437	Receiver, 9025, 25 Module, with Slide Mounting (slide kit required)	149, 155
310 104 447	Receiver, 9025TR, 25 Module, with 15" Platform, for Tabletop	151
310 104 450	Receiver, G6, 6 Module, Extended Right Handle	83
310 113 154	Protective Cover, G10, Receiver	89, 90, 95
310 113 158	Protective Cover, G6, Receiver	83, 87
310 113 163	Protective Cover, 9025, 9025VXI & 9025TR, Receiver	149, 151, 153, 161
310 113 248	VXI Plug & Play Adapter Plate for 8U Chassis (also fits Racal 7U Chassis)	153, 174
310 113 257	VXI Plug & Play Adapter Plate for 9U Chassis	153, 174
310 113 272	VXI Plug & Play Adapter Plate for Racal Instruments 9U Chassis	163, 164, 165, 171
310 113 285	Protective Cover, 9050, VXI and Discrete Wiring, Receiver	163, 174,
310 113 299	Adapter Kit for Keysight Technologies C- Size VXI E8400 used with Double Tier Receiver	131, 142
310 113 301	Fixed Mounting Panel, iCon, 4U, 8 Positions, Painted Gray	61
310 113 302	Fixed Mounting Panel, iCon, 4U, 8 Positions, Painted Black	61
310 113 303	Adapter Kit for Tektronix VX1410A, VX1401A and VX1420A used with Double Tier Receiver	163, 174
310 113 316	Vertical Hinged Mounting Frame, 9025, 8U	149
310 113 320	Vertical Hinged Mounting Frame, 9025, 9U	149
310 113 322	Vertical Hinged Mounting Frame, G18, 5U	117
310 113 327	Protective Cover, G18, Receiver	117, 123
310 113 328	Vertical Hinged Mounting Frame, G18, 9U	117
310 113 341	Vertical Hinged Mounting Frame, G6, 5U, 1 Position	83
310 113 342	Vertical Hinged Mounting Frame, G10, 5U	89
310 113 358	Vertical Hinged Mounting Frame, 5U, Blank	77, 83, 89
310 113 364	VXI Plug and Play Plate, 14U (for Part #310 104 248)	163
310 113 371	Chassis Mount Kit for Pickering 40-908, 40-914, 40-918	77, 83, 89, 117
310 113 391	Vertical Hinged Mounting Frame, G2, 5U, 3 Position, (2 Blank Plates Included)	77
310 113 394	Replacement Protective Cover, G2, Receiver	77, 81
310 113 395	Fixed Mounting Panel, G2, 5U, 3 Position, (2 Blank Plates Included)	77
310 113 397	Vertical Hinged Mounting Frame, G6, 5U, 2 Positions	83
310 113 402	Protective Cover, G12, Receiver	105, 113
310 113 406	Rack Extender Kit, G12, 1.5" Deep	105
310 113 408	Vertical Hinged Mounting Frame, G10, 5U, Cutout on Right	89
310 113 409	20" Slide Kit, Fits 18"–22" Deep Racks, Supports 180 lbs	99, 105, 109, 151, 176
310 113 410	24" Slide Kit, Fits 22"–26" Deep Racks, Supports 180 lbs	99, 105, 109, 127, 133, 151, 176
310 113 411	30" Slide Kit, Fits 28"-32" Deep Racks, Supports 180 lbs	31, 51, 61, 90, 105, 109, 117, 127, 133, 141, 149, 151, 164, 165, 176
310 113 417	Chassis Mount Kit for National Instruments PXI-1045 and PXI-1044 Chassis	77, 83, 89, 117
310 113 424	Cable Tray, Slide Configuration, for Strain Relief and Cable Management, for 28" or longer slides only	99, 105, 109, 151
310 113 430	Rack Extender Kit, S6, 4" Deep	99, 103
310 113 432	Protective Cover, Receiver, S6	99, 103
310 113 433	Gap Cover, G12/G12x, Rack Mount	105, 109, 113
310 113 439	Keyboard Tray Kit, Slide Configuration, Keyboard with Touchpad Mouse Included	99, 105, 109, 119, 154, 163, 176
310 113 444	Rear Cover, S6, Tabletop Configuration, for Part # 310 122 110/111	83, 90
310 113 451	28" Slide Kit, Fits 26"–30" Deep Racks, Supports 180 lbs	31, 51, 61, 90, 99, 105, 109, 117, 127, 133, 141, 149, 151, 164, 165, 176

Part #	Description	Page Number
310 113 453	Instrument Bracket Kit with Strain Relief, Slide Configuration, for 28" or longer slides only	99, 105, 176
310 113 456	Strain Relief Plate, iCon, Receiver	61, 67
310 113 461	Keying Pin Kit, iSeries, Receiver and ITA	31, 41, 51, 57, 61, 69
310 113 463	Vertical Hinged Mounting Frame, iCon, 5U, 3 Positions	61
310 113 465	Vertical Hinged Mounting Frame, iCon960, 5U, 2 Positions	69
310 113 466	Cover Plate, iCon960, for Vertical Hinged Mounting Frame	69
310 113 467	Cover Plate, iCon, for Mounting Panel Cutouts, Painted Gray	61
310 113 488	Fixed Mounting Frame, iCon, 1U, 2 Positions, Black Anodized	61
310 113 489	Protective Cover, iCon960, Receiver	69, 73
310 113 490	Cover Plate, iCon, for Mounting Frame Cutouts, Painted Black	61
310 113 491	Fixed Mounting Frame, iCon, 1U, 2 Positions, Painted Gray	61
310 113 492	Fixed Mounting Frame, iCon, 4U, 10 Positions, Painted Gray	40, 48
310 113 494	Rack Extender Kit, 9025TR, 1.5" Deep	151, 161
310 113 500	36" Slide Kit, Fits 34"-38" Deep Racks, Supports 180 lbs.	31, 51, 61, 90, 99, 105, 109, 117, 127, 133, 141, 149, 151, 164, 165, 176
310 113 517	Fixed Mounting Frame, i1, 2U, 8 Positions	51
310 113 518	Protective Cover, G12x, Receiver	109, 113
310 113 519	Rack Extender Kit, G12x, 1.5" Deep	109
310 113 520	Rear Cover, G12x, Tabletop Configuration	98, 103
310 113 524	Replacement Protective Cover, i1, Receiver	51, 56
310 113 531	Strain Relief Plate, i1, Receiver	51, 57
310 113 540	Mounting Plate, iCon 6U, 4 Positions, with Slide Mounting Kit (slide kit required)	61
310 113 542	Instrument Bracket Mounting Block Kit, for use with Pickering PXI Chassis	117, 149
310 113 546	Cover Plate, i1, for Mounting Frame Cutouts, Painted Gray	51
310 113 547	Mounting Plate, i1 6U, 4 Positions, with Slide Mounting Kit (slide kit required)	51
310 113 559	Strain Relief Plate, i2 Micro iCon, Receiver	31, 37
310 113 562	Bracket, Receiver, i2 Micro iCon, for PCB Mounting	31, 37
310 113 566	Adjustable Leg Kit for the 20" Platform, 27"-36", Supports 350 lbs.	99, 105, 109, 151, 165, 176
310 113 569	Protective Cover, i2 Micro iCon, Receiver	31, 37
310 113 582	Strain Relief Stand-off Kit, iCon, Receiver	51, 61
310 113 586	Mounting Plate, i2 Micro iCon, 6U, 6 Positions, with Slide Mounting Kit (slide kit required)	31
310 113 589	Chassis Mount Kit for Keysight M9018A Chassis	77, 83, 89, 117
310 113 597	Protective Cover, G20x, Receiver	133
310 113 606	Adapter Plate, Allows G20x and G40x Receiver to Accept iCon Modules	133, 141
310 113 607	Cover Plate, i2 Micro iCon, for Mounting Panel Cutouts, Painted Gray	31
310 113 622	Mounting Flange Kit, G20/G20x Slide Mount, for NI PXI-1045 Chassis	127, 133
310 113 627	Mounting Panel, iCon960, 1 Position with Slide Mounting (Slide Kit Required	69
310 113 644	Mounting Flange Kit, G20/G20x Slide Mount, for Pickering 40-923	127, 133
310 113 653	Mounting Flange Kit, G20/G20x Slide Mount, for Keysight M9018A Chassis	127, 133
310 113 667	Protective Cover, i2 MX, Receiver, EMI-Shielded	41, 47
310 113 678	Replacement Protective Cover, iCon, Receiver	61, 67
310 113 681	Strain Relief Plate, i2 MX, Receiver	41, 47
310 113 693	Protective Cover, G20x, Receiver, EMI	139
310 118 112	Keying Pin Kit, Receiver/ITA	77, 83, 105, 109
310 120 101	Receiver, G18, 18 Module for Discrete Wiring	117, 118
310 120 102	Receiver, G18, 18 Module with Flush Hangers	117
310 120 110	Receiver, G2, 2 Module, Keying Feature, with Protective Cover	77, 78
310 120 141	Receiver, G18, 18 Module, with Slide Mounting Kit (slide kit required)	117, 119
310 120 146	Receiver, G10, 10 Module, with Slide Mounting Kit (slide kit required)	90, 92
310 120 161	Receiver, G18, 18 Module, EMI Gasket, with Slide Mounting (slide kit required)	117
310 120 163	Receiver, G40x, 48 Module, with Slide Mounting Kit (slide kit required)	141, 142
310 120 168	Receiver, G18, 18 Module, EMI Gasket	117, 120
310 120 183	Receiver, G20x, 29 Module, EMI Gasket	133, 135
310 120 186	Receiver, G20x, 28 Module	133, 134
310 120 188	Receiver, G20, 20 Module	127, 128
310 120 193	Receiver, G20, 20 Module, EMI Gasket	127, 129
310 122 100	Receiver, S6, 6 Module	99, 100
310 122 101	Receiver, S6, 6 Module with 15" Platform, for Slide Mount (slide kit required)	99
310 122 108	Receiver, S6, 6 Module with 20" Platform, for Slide Mount (slide kit required)	99, 101
310 122 110	Receiver, S6, 6 Module with 15" Platform for Tabletop	99
310 122 111	Receiver, S6, 6 Module with 20" Platform for Tabletop	99
310 123 101	Receiver, iCon, with Protective Cover	61, 62
310 123 102	Receiver, iCon, EMI Shielded, with Protective Cover	61, 63
310 123 103	Receiver, iCon, Reverse Module Configuration for iCon ITA Modules, with Protective Cover	61
310 124 102	Receiver, iCon960, 2 QuadraPaddle Modules, Fully Loaded with Twin Female Contacts and Round Posts (510 150 135)	69
310 124 103	Receiver, iCon960, 2 QuadraPaddle Modules, for Crimp Contacts (510 150 116)	69, 70
310 124 105	Receiver, iCon960, 2 QuadraPaddle Modules (510 150 115) and 2 96 Position TriPaddle Modules (510 104 136)	69
310 124 112	Receiver, iCon960, 2 QuadraPaddle Modules, Fully Loaded with Twin Female Contacts (510 150 131)	69

Part #	Description	Page Number
310 124 117	Receiver, iCon960, 2 TriPaddle Modules (510 104 101 and 510 104 136) and 2 TriPaddle/Mini Power Hybrid Modules (510 104 206)	69
310 124 124	Receiver, iCon960, 4 Twinaxial Modules (510 104 155)	69
310 124 126	Receiver, iCon960, 2 TriPaddle Modules (510 104 149)	69
310 124 128	Receiver, iCon960, 2 QuadraPaddle Modules, for Crimp Contacts (510 151 105) and 2 Mini Coaxial Modules (510 108 111)	69
310 124 130	Receiver, iCon960, 1 QuadraPaddle Module (510 150 115) and 3 TriPaddle Modules (510 108 126	69
310 124 131	Receiver, iCon960, 2 QuadraPaddle Modules, Fully Loaded with Twin Female Contacts and Square Posts for Wire Wrap	69, 71
310 124 132	Receiver, iCon960, 16/16, 192 and 480 QuadraPaddle	69
310 128 101	Receiver, i1, with Protective Cover	51, 52
310 130 101	Receiver, i2 Micro iCon, 168 Position, Fully Loaded with Twin Female Contacts (610 138 200)	31, 32
310 130 102	Receiver, i2 Micro iCon, 168 Position, for Crimp Contacts	31
310 130 104	Receiver, i2 Micro iCon, 120/12 Position Hybrid, Loaded with Twin Female Contacts (610 138 200)	31, 34
310 130 107	Receiver, i2 Micro iCon, 168 Position, Unloaded, for Twin Female Contacts (610 138 200)	31, 33
310 130 113	Receiver, i2 MX, 2 SIM Module Inserts, 22 Position, EMI-Shielded	41, 43
310 130 114	Receiver, i2 MX, EMI-Shielded	41, 42
310 130 202	Receiver, i2 MX, 2 QuadraPaddle Module Inserts, Fully Loaded with Twin Female Contacts (610 138 200), EMI-Shielded	41
310 130 204	Receiver, i2 MX, 2 TriPaddle Signal/Micro Power and Micro Coaxial Module Inserts, EMI-Shielded	41
310 130 205	Receiver, i2 MX, QuadraPaddle Module Insert, Crimp/Micro Power and Micro Coaxial Module Insert, EMI-Shielded	41
410 104 111	ITA, 9025, 25 Module, Single Tier	149, 151, 153, 159, 163, 164, 165
410 104 118	ITA, 9006, 6 Module	83
410 104 123	ITA, 9010, 10 Module	89
410 104 272	ITA with Removable Cover, G10, 10 Module, with Protective Cover	89, 90, 93
410 104 273	ITA with Removable Cover, G6, 6 Module, Keying Feature, with Protective Cover	83, 85
410 104 288	ITA, G6, 6 Module, EMI Gasket	83
410 104 304	ITA, 9025, 25 Module, EMI, with 8" Enclosure	149
410 104 306	ITA, 9025, 25 Module, Single Tier, for EMI	149
410 104 322	ITA, G12, Front Mount, 12 Module, with Protective Cover	105, 107, 109
410 104 331	ITA, G6, 6 Module	83, 86
410 104 375	ITA, G10, 10 Module	89, 90, 94
410 104 474	ITA, G12x, Front Mount, 18 Module	109, 111
410 104 505	ITA, 9025, Single Tier, 1.5" Thick	149
410 104 538	ITA, 9050, 50 Module, VXI and Discrete Wiring, Double Tier	153, 163, 170
410 112 198	Enclosure, 25 Module, Hinged Cover Plate, 4" Deep	89, 90, 149, 153, 160, 164, 165
410 112 252	Enclosure, 9010, 10 Module with 3 Cable Clamps	89, 90
410 112 273	Enclosure, 25 Module, Hinged Cover Plate, 8" Deep	149, 151, 153, 160
410 112 291	Enclosure, 10 Module with Hinged Cover Plate (for ITA Part # 410 104 375)	89, 95
410 112 336	Enclosure, 50 Module, 50 Module 4" Adapter for 25 Module, Hinged Cover	160, 164
410 112 368	Enclosrure, 25 Module, Large	149, 151, 153, 160, 164, 165
410 112 375	Enclosure, 50 Module, Hinged Cover Plate, 8" Deep	163, 164, 165
410 112 401	Enclosure, 6 Module, 4" Deep with Hinge (for ITA Part # 410 104 331)	83
410 112 424	Adapter Plate, allows 10 Module ITA to accept 25 Module Enclosures	89, 90
410 112 463	Enclosure, 50 Module, Hinged Cover Plate, 6" Deep	163, 164, 165, 172
410 112 519	Enclosure, 50 Module, Hinged Cover Plate, 12" Deep	163, 164, 165, 172
410 112 527	Enclosure, 18 Module, Hinged Cover Plate, 4" Deep	117, 123
410 112 541	Protective Cover, G18, ITA	117, 123
410 112 578	Protective Cover, 9025, 9025VXI & 9025TR, ITA	149, 153, 161, 163, 164, 165
410 112 579	Protective Cover, 9050, ITA	163
410 112 582	Protective Cover, 9050, VXI and Discrete Wiring, ITA	164, 165, 171
410 112 599	Threaded Coupling Adapter, G2, G6, G10, ITA, for Conduit Harnessing Assemblies/Clamps	77, 81, 83, 87, 89
410 112 664	Enclosure, G18, 18 Module with 3 Cable Clamps	117, 123
410 112 665	Enclosure, G12, Front Mount, 4"x18"x12"	105, 109, 112
410 112 680	Replacement Protective Cover, G2, ITA	77, 81
410 112 681	Replacement Protective Cover, G12, ITA	105, 113
410 112 684	Replacement Protective Cover, G6, ITA	83, 87
410 112 685	Replacement Protective Cover, G10, ITA	89, 90, 95
410 112 686	Enclosure, G2 (for ITA # 410 120 112)	77
410 112 700	Replacement Protective Cover, ITA, S6	103
410 112 701	Enclosure, S6, 1.75" x 18" x 8"	99, 103
410 112 702	Enclosure, S6, 1.75" x 18" x 8" for Discrete Wiring	99, 103
410 112 703	Enclosure, S6, 4" x 18" x 12"	99, 103
410 112 712	Enclosure, S6, 4" x 18" x 12" for Discrete Wiring	99
410 112 739	Enclosure, G12, Front Mount, 4"x18"x12", for Discrete Wiring	105, 109
410 112 750	Replacement Protective Cover, iCon, ITA	61, 67
410 112 757	Enclosure, G12, Front Mount, 7"x18"x12"	105, 109
410 112 770	Enclosure, 50 Module, L-Shaped	163, 164, 165, 171
410 112 775	Enclosure, ITA, iCon960, 2 Cable Clamps	73
410 112 790	Enclosure, 20 Module, Hinged Cover Plate, 4" Deep	127, 138
410 112 797	Protective Cover, G20, ITA	127

Part #	Description	Page Number
410 112 804	Protective Cover, iCon960, ITA	69, 73
410 112 823	Enclosure, 25 Module, Hinged Cover Plate	151, 160, 161, 165
410 112 849	Enclosure, G12x, Front Mount, 6"x18"x12"	109, 112
410 112 856	Enclosure, G12x, Front Mount, 6"x18"x12", for Discrete Wiring	109, 112
410 112 857	Protective Cover, G12x, ITA,-	109, 113
410 112 864	Replacement Protective Cover, i1, ITA	51, 56
410 112 924	Protective Cover, i2 Micro iCon, i2 MX, ITA	31, 37, 41, 47
410 112 976	Adapter Plate, 9050 Enclosure to 9025 ITA (ITA Positioned on Lower Part of Enclosure)	149, 153
410 112 984	Enclosure, 28 Module, Hinged Cover Plate, 8" Deep	133
410 112 986	Protective Cover, G20x, ITA	133, 139
410 112 996	Adapter Plate, Allows G20x to Accept iCon Modules	133, 141
410 114 002	Enclosure, G12, Frount Mount, Sloped	105, 112
410 114 003	Enclosure, G12x, Front Mount, Sloped	109, 112
410 114 004	Enclosure, 25 Module, Front Mount, Sloped, for 9025 TR	161
410 114 010	Protective Cover, G12, ITA, Aluminum	105
410 114 101	Enclosure, G12, Front Mount, Sloped, G10 Cover	105
410 114 102	Enclosure, G12x, Front Mount, Sloped, G10 Cover	109
410 114 103	Enclosure, 25 Module, Front Mount, Sloped, for 9025TR, with G10 Cover	151, 160, 161
410 114 133	Enclosure Accessory Kit, Gas Spring Loaded for Sloped Enclosures	105, 109
410 114 138	Enclosure, 10 Module, 4" Deep with 3 Cable Exits	89, 90
410 114 143	Enclosure, 20 Module, Hinged Cover Plate, 12" Deep	127
410 120 101	ITA, G18, 18 Module for Discrete Wire and PCB Capabilities	117, 122
410 120 110	ITA with Removable Cover, G2, 2 Module, Keying Feature, with Protective Cover	77, 79
410 120 111	ITA, G18, 18 Module	117, 121
410 120 112	ITA, G2, 2 Module	77, 80
410 120 115	Enclosure, 48 Module, Hinged Cover Plate, 6" Deep	141
410 120 120	ITA, G2, 2 Module with 10 Module Enclosure and Adapter Plate	77
410 120 199	ITA, G20, 20 Module	127, 130, 133, 141
410 120 206	ITA, G20, 20 Module, Keying Feature	127
410 120 210	ITA, G20x, 28 Module	133, 136, 141
410 120 246	ITA, G40x, 48 Module	141, 143
410 120 253	ITA, G20x, 28 Module, EMI, 2"	133, 137
410 122 100	ITA, S6, 6 Module, with Protective Cover	99, 102
410 123 101	ITA, iCon, with Protective Cover	61, 64
410 123 102	ITA, iCon, EMI Shielded, with Protective Cover	61, 66
410 123 106	ITA, iCon, with Large Cable Clamp, with Protective Cover	61, 65
410 123 111	ITA, iCon, with Threaded Coupling Adapter, with Protective Cover	61
410 123 122	ITA, iCon with Oversized Backshell	61
410 123 593	Cable Assembly, ITA, iCon, QuadraPaddle, 36" Flying Leads	61
410 123 607	Cable Assembly, ITA, iCon 100/8, QuadraPaddle, Mini Power and Mini Coaxial, 36", Flying Leads	61
410 123 669	Cable Assembly, ITA, iCon, QuadraPaddle, 72", Double-Ended	61
410 124 103	ITA, iCon960, 2 QuadraPaddle Modules, Fully Loaded with Twin Male Contacts and Round Posts for PCB Mounting (510 151 108)	69
410 124 104	ITA, iCon960, 2 QuadraPaddle Modules, for Crimp Contacts (510 151 106)	69, 72
410 124 105	ITA, iCon960, 2 QuadraPaddle Modules (510 151 105) and 2 TriPaddle Modules (510 108 126) for Crimp Contacts	69
410 124 117	ITA, iCon960, 2 TriPaddle Modules (510 108 101 and 510 108 126) and 2 TriPaddle/Mini Power Hybrid Modules (510 104 206)	69
410 124 129	ITA, iCon960, 4 Twinaxial Modules (510 108 138)	69
410 124 137	ITA, iCon960, 2 TriPaddle Modules (510 108 131)	69
410 124 139	ITA, iCon960, 2 QuadraPaddle Modules (510 151 105) and 2 Mini Coaxial Modules (510 108 111)	69
410 124 143	ITA, iCon960, 1 QuadraPaddle Module (510 151 105) and 3 TriPaddle Modules (510 108 126)	69
410 124 146	ITA iCon960, 1 QuadraPaddle, 192 Position (510 151 105), 1 QuadraPaddle, 480 Position (510 151 106) and 1 TriPaddle Signal/Mini Power Module, 16/16 Position (510 108 178)	69
410 128 101	ITA, i1, with Protective Cover	51, 53
410 128 102	ITA, i1, EMI Shielded, with Threaded Coupling Adapter and Protective Cover	51, 55
410 128 103	ITA, i1, with Large Cable Clamp and Protective Cover	51, 54
410 128 461	Cable Assembly, ITA, i1, QuadraPaddle, 36", Flying Leads	51
410 128 467	Cable Assembly, ITA, i1 Hybrid 100/8, QuadraPaddle, Mini Power and Mini Coaxial, 36", Flying Leads	51
410 128 539	Cable Assembly, ITA, i1, QuadraPaddle, 72", Double Ended	51
410 130 101	ITA, i2 Micro iCon, 168 Position, with Protective Cover	31, 35
410 130 104	ITA, i2 Micro iCon, 120/12 Position Hybrid	31, 36
410 130 106	ITA, i2 Micro iCon, 168 Position, with Oversized Backshell	31
410 130 114	ITA, i2 MX, EMI Backshell with Cable Exit	41, 44
410 130 116	ITA, i2 MX, 2 SIM Module Inserts, 22 Position, EMI Backshell	41, 45
410 130 117	ITA, i2 MX, EMI Backshell, without Cable Exit	41
410 130 202	ITA, i2 MX, 2 QuadraPaddle Module Inserts, Crimp, EMI Backshell	41
410 130 204	ITA, i2 MX, 2 TriPaddle Signal/Micro Power and Micro Coaxial Module Inserts, EMI Backshell	41
410 130 205	ITA, i2 MX, QuadraPaddle Module Insert, Crimp/Micro Power and Micro Coaxial Module Insert, EMI Backshell	41
410 130 409	Cable Assembly, ITA, i2 Micro iCon, QuadraPaddle, 36" Flying Leads	31

Part #	Description	Page Number
410 130 410	Cable Assembly, ITA, i2 Micro iCon Hybrid, QuadraPaddle, Micro Power and Micro Coaxial, 36", Flying Leads	31
410 130 425	Cable Assembly, ITA, i2 Micro iCon, QuadraPaddle, 72", Double-Ended	31
410 130 426	Cable Assembly, ITA, i2 Micro iCon Hybrid, QuadraPaddle, Micro Power and Micro Coaxial, 72", Flying Leads	31
510 104 118	Blank Module, Receiver/ITA, 1 Module Position	266
510 104 120	Mini Coaxial Module, Receiver, 19 Position	221
510 104 123	Mini Power Module, Receiver, 19 Position	211
510 104 128	PCB Adapter, Receiver, TriPaddle, 64 Position, to PCB-Mounted 2x34 pin (BERG 65496-019) Connectors	206
510 104 129	Blank Shielding Module, Receiver/ITA, 1 Module Position	266
510 104 133	Thermocouple Module, Receiver, 64 Position	257
510 104 134	Signal Module, Receiver, TriPaddle, 64 Position	203
510 104 135	Signal Module, Receiver, TriPaddle, 96 Position with Right Angle Contacts for Custom PCB Mounting	209
510 104 136	Signal Module, Receiver, TriPaddle, 96 Position	204
510 104 139	PCB Adapter, Receiver, TriPaddle, 96 Position, to PCB-Mounted 1x96 Male DIN 41612 Connector	208
510 104 144	Blank Module, Receiver/ITA, 5 Module Positions	266
510 104 149	Signal Module, Receiver, TriPaddle, 256 Position	205
510 104 150	Mini Coaxial Module, Receiver, 76 Position	223
510 104 155	Twinaxial Module, Receiver, 8 Position	254
510 104 160	Pneumatic Module, Receiver, 5 Position (3/8" ID)	262
510 104 178	Blank Module, VXI Receiver, 2 Module Positions	266
510 104 185	Pneumatic Module, Receiver, 10 Positions (1/8" Flow)	262
510 104 187	Signal Module, Receiver, TriPaddle, 64 Position with Right Angle Contacts for Custom PCB Mounting	207
510 104 206	TriPaddle Signal/Mini Power Module, Receiver, 16/16 Position	212
510 104 224	Coaxial Module, Receiver, 40 GHz, 8 Position	251
510 104 243	TriPaddle Signal/Mini Coax Module, Receiver, 16/16 Position	224
510 104 249	Coaxial Module, 75 Ohm, Receiver, 32 Position	241
510 104 251	Coaxial Module, Receiver, 20/26 GHz and 75 Ohm HD, 32 Position	247
510 104 260	Vacuum Module, Receiver, 2 Port Positions	264
510 104 261	TriPaddle Signal/Thermocouple Module, Receiver, 84/12 Position	258
510 104 266	Vacuum Module, Receiver, 2 Port Positions with Filter	264
510 104 267	Micro Power and Micro Coaxial Module, Receiver, 50 Position	234
510 104 270	Micro Power and Micro Coaxial Module, Receiver, 120 Position	235
510 104 276	Vacuum-Pneumatic Module, Receiver, 1-2 Position	265
510 104 280	Mini Coax Module, Receiver, 19 Position, Loaded with Right Angle Contacts (610 104 160)	225
510 104 287	Coaxial Module, Receiver, 20/26 GHz, 17 Position	249
510 104 289	Coaxial Module, Receiver, 20/26 GHz and 75 Ohm HD, 32 Position. Includes strain relief plate	247
510 104 301	Mini Coaxial Module, Receiver, 37 Position	222
510 104 306	TriPaddle Signal/Micro Coax Module, Receiver, 77/8 Position	236
510 104 307	TriPaddle Signal / High Power Module, Receiver, 6/6 Position, Strain Relief Plate Included	239
510 108 101	Signal Module, ITA, TriPaddle, 64 Position	203
510 108 111	Mini Coaxial Module, ITA, 19 Position	221
510 108 112	Signal Module, ITA, TriPaddle, 64 Position with Right Angle Contacts for Custom PCB Mounting	207
510 108 115	Mini Power Module, ITA, 19 Position	211
510 108 124	Thermocouple Module, ITA, 64 Position	275
510 108 125	Signal Module, ITA, TriPaddle, 96 Position with Right Angle Contacts for Custom PCB Mounting	209
510 108 126	Signal Module, ITA, TriPaddle, 96 Position	204
510 108 131	Signal Module, ITA, TriPaddle, 256 Position	205
510 108 132	Mini Coaxial Module, ITA, 76 Position	222
510 108 138	Twinaxial Module, ITA, 8 Position	254
510 108 140	PCB Adapter, ITA, TriPaddle, 64 Position, to PCB-Mounted 2x34 pin (BERG 65496-019) Connectors	206
510 108 144	Pneumatic Module, ITA, 5 Position (3/8" Flow)	262
510 108 148	PCB Adapter, ITA, TriPaddle, 96 Position, to PCB-Mounted 1x96 Male DIN 41612 Connector	208
510 108 160	Pneumatic Module, ITA, 10 Position (1/8" Flow)	262
510 108 169	Coaxial Module, ITA, 40 GHz, 8 Position	251
510 108 178	TriPaddle Signal/Mini Power Module, ITA, 16/16 Position	212
510 108 179	Coaxial Module, ITA, 20/26 GHz, 75 Ohm and 75 Ohm HD, 32 Position	241, 247
510 108 210	TriPaddle Signal/Mini Coax Module, ITA, 16/16 Position	224
510 108 240	Coaxial Module, ITA, 20/26 GHz, 17 Position	249
510 108 242	Vacuum Module, ITA, 2 Port Positions	264
510 108 245	TriPaddle Signal/Thermocouple Module, ITA, 84/12 Position	258
510 108 251	Vacuum Module, ITA, 2 Port Positions with M22.5 x 1.5 Tap	264
510 108 262	Micro Power and Micro Coaxial Module, ITA, 50 Position	234
510 108 263	Micro Power and Micro Coaxial Module, ITA, 120 Position	235
510 108 264	Vacuum-Pneumatic Module, ITA, 1-2 Position	265
510 108 276	Mini Coaxial Module, ITA, 37 Position	222
510 108 278	TriPaddle Signal/Micro Coax Module, ITA, 77/8 Position	236
510 108 281	TriPaddle Signal / High Power Module, ITA, 6/6 Position	239
510 109 116	Strain Relief Plate for Select Receiver Modules	203, 204, 205, 211, 212, 221, 257, 258, 259

Part #	Description	Page Number
510 109 117	Module Retainer Block Set For Discrete Wiring 2 Module Positions	153, 163, 174
510 109 118	C-Size InterConnect Adapter, Double Slot, 4 Module Positions	153, 163, 175
510 109 128	Connector Cover Plate for 25 Pin, D-Shell (for P/N 510 109 118)	175
510 109 129	Connector Cover Plate for 50 Pin, SCSI (for P/N 510 109 118)	175
510 109 138	Connector Cover Plate for 50 Pin, D-Shell	175
510 109 139	Cable Clamp Option (Replaces Blank Cover Plate when Cabling into Adapter)	175
510 109 142	Connector Cover Plate for 9 Pin, D-Shell	175
510 109 149	Connector Cover Plate for 15 Pin, D-Shell	175
510 109 150	Slot 0 Module Retainer Block Set for Discrete Wiring Modules for 1 Module	153, 163, 174
510 109 179	C-Size InterConnect Adapter, Single Slot for 2 Module Positions, Clamp Style	153, 163, 174
510 109 197	InterConnect Adapter for A or B to C Carrier (uses VME to VXI Adapter)	153, 175
510 109 202	C-Size InterConnect Adapter, Single Slot (for use with Part # 510 109 355)	153, 175
510 109 204	Header, Receiver, i2 Micro iCon, 84 Pin, for PCB Mounting	31, 37, 41
510 109 206	Header, Receiver, i2 Micro iCon, 60 Pin, for PCB Mounting	31, 37
510 109 282	Strain Relief Plate 90 Series Receiver, Module, 50 Position, Micro Power and Micro Coaxial	234
510 109 296	Strain Relief Plate for ITA Modules	189, 190, 203, 204, 205, 211, 212, 221, 234, 235, 241, 247, 251, 257, 258, 269
510 109 298	Strain Relief Plate for Receiver Modules	234, 235, 241, 247, 251, 269
510 109 299	Module Accessory Master Kit with Allen Wrenches	177
510 109 300	Module Accessory Kit Quantity 39, 0-80 X .25" Screws	177
510 109 301	Module Accessory Kit Quantity 26, .4-40 X .375" Screws	177
510 109 302	Module Accessory Kit Quantity 26, .4-40 X .625" Screws	177
510 109 303	Module Accessory Kit Quantity 26, .4-40 X .56" Screws	177
510 109 305	Module Accessory Kit Quantity 26, .2-56 X .187" Screws	177
510 109 306	Module Accessory Kit Quantity 26, .2-56 X .375" Screws	177
510 109 307	Module Accessory Kit Quantity 26, .2-56 X .25" Screws	177
510 109 315	Header/Shroud Right Angle Kit, Receiver, QuadraPaddle, for Custom PCB Mounting (requires 510 150 130)	197
510 109 316	Header/Shroud Right Angle Kit, ITA, QuadraPaddle, for Custom PCB Mounting (requires 510 151 107)	197
510 109 326	Connector Cover Plate for 25 Pin, D-Shell (for P/N 510 109 179/197)	175
510 109 327	Connector Cover Plate for 15 Pin, D-Shell (for P/N 510 109 179/197)	175
510 109 328	Connector Cover Plate for 9 Pin, D-Shell (for P/N 510 109 179/197)	175
510 109 329	Connector Cover Plate for 50 Pin, D-Shell (for P/N 510 109 179/197)	175
510 109 330	Connector Plate for BNC Connector (for P/N 510 109 179)	175
510 109 331	Connector Cover Plate with Cable Clamp (for Part # 510 109 179)	175
510 109 337	C-Size InterConnect Adapter, Double Slot for use with Racal 1260-100 Carrier	153, 163, 175
510 109 338	Strain Relief Plate for 160 pin DIN VXI Connectors	269
510 109 339	PCB Adapter, ITA, QuadraPaddle, 192 Position, to PCB-mounted 2x68 Pin Female SCSI Connector	192
510 109 348	Strain Relief Plate for QuadraPaddle 480 Position Receiver Modules	190, 269
510 109 349	Strain Relief Plate for QuadraPaddle 192 Position Receiver Modules	189, 269
510 109 354	VTI Instruments Mounting Ear Kit for SMP 1200 Carrier (for use with Part # 510 109 118)	175
510 109 355	VTI Instruments Mounting Ear Kit for SMP 1100 Carrier (for use with Part # 510 109 202)	175
510 109 359	Module Accessory Kit, 26 4-40x .750" Screws	177
510 109 454	C-Size InterConnect Adapter, Single Slot, 2 Module Positions, Clamp Style with VXI Keying	175
510 109 461	PXI Pull-Thru Adapter, Single Slot, 1 Module Position	127, 133, 141
510 109 462	PXI Module Adapter, Single Slot, I Module Position	127, 133, 141
510 109 548	Strain Relief Plate for 50 Position ITA Micro Coax Module	234
510 109 568	Strain Relief Plate for 34 Position Receiver/ITA SIM Module	19, 27
510 109 572	Strain Relief Plate, iCon High Power, Receiver	61, 238
510 143 001	SIM Module Insert, Receiver, i2 MX, 11 Position	41, 46, 182
510 143 002	QuadraPaddle Signal, Module Insert, Receiver, i2 MX, 84 Position, Crimp	41, 187
510 143 003	QuadraPaddle Signal, Module Insert, Receiver, i2 MX, 84 Position, Fully Loaded w/ Twin Female Contacts (610 138 200)	41, 187
510 143 004	TriPaddle Signal/Micro Power and Micro Coaxial, Module Insert, Receiver, i2 MX, 9/9 Position	41, 230
510 143 005	TriPaddle Signal/Mini Power and Mini Coaxial, Module Insert, Receiver, i2 MX, 8/8 Position	41, 217
510 143 006	TriPaddle Signal, Module Insert, Receiver, i2 MX, 33 Position	41, 201
510 144 001	SIM Module Insert, ITA, i2 MX, 11 Position	41, 46, 182
510 144 002	QuadraPaddle Signal, Module Insert, ITA, i2 MX, 84 Position, Crimp	41, 187
510 144 004	TriPaddle Signal/Micro Power and Micro Coaxial, Module Insert, ITA, i2 MX, 9/9 Position	41, 230
510 144 005	TriPaddle Signal/Mini Power and Mini Coaxial, Module Insert, ITA, i2 MX, 8/8 Position	41, 217
510 144 006	TriPaddle Signal, Module Insert, ITA, i2 MX, 33 Position	41, 201
510 150 115	Signal Module, Receiver, QuadraPaddle, 192 Position, Wire Crimp, Unloaded	189
510 150 116	Signal Module, Receiver, QuadraPaddle, 480 Position, Unloaded	190
510 150 120	PCB Adapter, Receiver, QuadraPaddle, 192 Position, to PCB-Mounted 2x96 SCSI Connectors	196
510 150 125	PCB Adapter, Receiver, QuadraPaddle, 192 Position, to PCB-Mounted 2x68 Male SCSI Connectors	191
510 150 126	PCB Adapter, Receiver, QuadraPaddle, 192 Position, to PCB-Mounted 2x68 Female VHDCI Connectors	191
510 150 127	PCB Adapter, Receiver, QuadraPaddle, 192 Position, to PCB-Mounted 1x100 Female SCSI Connector	193
510 150 128	PCB Adapter, Receiver, QuadraPaddle, 192 Position, 2x96 pin Male SCSI Connectors	194
510 150 130	Signal Module, Receiver, QuadraPaddle, 192 Position, Fully Loaded with Twin Female Contacts (610 138 200)	189
510 150 131	Signal Module, Receiver, QuadraPaddle, 480 Position, Fully Loaded with Twin Female Contacts (610 138 200)	190

Part #	Description	Page Number
510 150 135	Signal Module, Receiver, QuadraPaddle, 480 Position, Fully Loaded with Twin Female Contacts and Round Posts (610 138 200/117)	190
510 150 136	Signal Module, Receiver, QuadraPaddle, 192 Position, Fully Loaded for Wire Wrap (610 138 200 and 610 138 118)	189
510 150 137	Signal Module, Receiver, QuadraPaddle, 192 Position, Fully Loaded with Twin Female Contacts and Round Posts (610 138 200/117)	189
510 150 141	PCB Adapter, Receiver, QuadraPaddle, 192 Position to NI PXI-2532	196
510 150 147	Signal Module, Receiver, QuadraPaddle, 480 Position, Fully Loaded for Wire Wrap (610 138 200 and 610 138 118)	190
510 150 148	PCB Adapter, Receiver, 192 Position QuadraPaddle to NI PXI-2529	196
510 150 152	Signal Module, Receiver, QuadraPaddle,192 Position, Right Angle Contacts for PCB Mounting	197
510 150 155	PCB Adapter, Receiver, QuadraPaddle, 192 Position, to PCB-Mounted 6x32-Pin Ribbon Cable Headers	195
510 150 165	PCB Adapter, ITA, QuadraPaddle, 192 Position, to PCB-Mounted 2x68 Male SCSI Connectors	191
510 150 207	i2 PCB Adapter, Receiver, QuadraPaddle, 168 Position, to 2 PCB Mounted 68 Pin Male SCSI Connectors	31
510 150 208	i2 PCB Adapter, Receiver, QuadraPaddle, 168 Position, to 2 PCB Mounted 68 Pin Female VHDCI Connectors	31
510 150 210	PCB Adapter, Receiver, QuadraPaddle, 192 Position, to 2 PCB-Mounted 12X Male InfiniBand Connectors (LVDS)	196
510 151 105	Signal Module, ITA, QuadraPaddle, 192 Position, Unloaded	189
510 151 106	Signal Module, ITA, QuadraPaddle, 480 Position, Unloaded	190
510 151 107	Signal Module, ITA, QuadraPaddle, 192 Position, Fully Loaded with Round Posts (610 138 115)	189
510 151 108	Signal Module, ITA, QuadraPaddle, 480 Position, Fully Loaded with Round Posts (610 138 115)	190
510 151 121	Signal Module, ITA, QuadraPaddle,192 Position, Right Angle Contacts for Custom PCB Mounting	197
510 151 123	PCB Adapter, ITA, QuadraPaddle, 192 Position, to PCB-Mounted 2x68 Female VHDCI Connectors	192
510 151 124	Signal Module, ITA, QuadraPaddle, 192 Position, Fully Loaded for Wire Wrap with Anti-Rotation (610 138 122)	189
510 151 127	Signal Module, ITA, QuadraPaddle, 480 Position, Fully Loaded for Wire Wrap with Anti-Rotation (610 138 122)	190
510 160 101	Signal Module, Receiver, QuadraPaddle, iCon, 160 Position, for Crimp Contacts	188
510 160 102	QuadraPaddle Signal / Mini Power and Mini Coaxial Module, Receiver, iCon, 100/8 Position	219
510 160 103	TriPaddle Signal / Mini Power and Mini Coaxial Module, Receiver, iCon, 64/8 Position	220
510 160 104	Mini Power and Mini Coaxial Module, Receiver, iCon, 24 Position	218
510 160 105	Signal Module, Receiver, QuadraPaddle, iCon, 160 Position, Fully Loaded with 610 138 200 Twin Female Contacts	188
510 160 106	Micro Power and Micro Coaxial Module, Receiver, iCon, 40 Position	231
510 160 107	QuadraPaddle Signal / Micro Power and Micro Coaxial Module, Receiver, iCon, 100/15 Position, for Crimp Contacts	232
510 160 108	Signal Module, Receiver, TriPaddle, iCon, 96 Position	202
510 160 109	TriPaddle Signal / Twinaxial Module, Receiver, iCon, 40/4 Position	253
510 160 110	Thermocouple Module, Receiver, iCon, 96 Position	256
510 160 111	TriPaddle Signal / Micro Power and Micro Coaxial Module, Receiver, iCon, 24/30 Position	233
510 160 112	QuadraPaddle Signal / Micro Power and Micro Coaxial Module, Receiver, iCon, 100/15 Position, Fully Loaded with Twin Female Contacts (610 138 200)	232
510160113	QuadraPaddle Signal/Micro Power or Micro Coaxial Module, REceiver, iCon, 100/15, Fully Loaded with Twin Female Contacts and Round Posts (610138200 and 610138117)	232
510 160 114	Coaxial Module, Receiver, iCon, 20/26 GHz and 75 Ohm HD, 18 Position	245
510 160 115	TriPaddle Signal / 20/26 GHz and 75 Ohm HD Coaxial Module, Receiver, iCon, 64/8 Position	246
510 160 122	Signal Module, Receiver, Quadrapaddle, iCon, 160 Position, Fully Loaded with Twin Female Contacts and Round Posts (610 138 200 and 610 138 117)	188
510 160 124	TriPaddle Signal / High Power Module, Receiver, iCon, 4/4 Position	238
510 161 101	Signal Module, ITA, QuadraPaddle, iCon, 160 Position	188
510 161 102	QuadraPaddle Signal / Mini Power and Mini Coaxial Module, ITA, iCon, 100/8 Position	219
510 161 103	TriPaddle Signal / Mini Power and Mini Coaxial Module, ITA, iCon, 64/8 Position	220
510 161 104	Mini Power and Mini Coaxial Module, ITA, iCon, 24 Position	218
510 161 106	Micro Power and Micro Coaxial Module, ITA, iCon, 40 Position	231
510 161 107	QuadraPaddle Signal / Micro Power and Micro Coaxial Module, ITA, iCon, 100/15 Position	232
510 161 108	Signal Module, ITA, TriPaddle, iCon, 96 Position	202
510 161 109	TriPaddle Signal / Twinaxial Module, ITA, iCon, 40/4 Position	253
510 161 110	Thermocouple Module, ITA, iCon, 96 Position	256
510 161 111	TriPaddle Signal / Micro Power and Micro Coaxial Module, ITA, iCon, 24/30 Position	233
510 161 114	Coaxial Module, ITA, iCon, 20/26 GHz and 75 Ohm HD, 18 Position	245
510 161 115	TriPaddle Signal / 20/26 GHz and 75 Ohm HD Coaxial Module, ITA, iCon, 64/8 Position	246
510 161 124	TriPaddle Signal / High Power Module, ITA, iCon, 4/4 Position	238
510 170 101	SIM Module, Receiver, 34 Position	19, 26, 183
510 170 102	SIM Module, Receiver, 34 Position, Fully Loaded with VTAC HSD Double Ended and Right Angle Inserts (610 151 106)	23
510 170 103	PCB Adapter, Receiver, SIM, VTAC HSD, 34 Position, to 6 USB 3.0	25
510 170 104	PCB Adapter, Receiver, SIM, VTAC HSD, 5 Position, to 1 USB 3.0	24
510 170 105	PCB Adapter, Receiver, SIM, VTAC HSD, 6 Position, to 1 Cat 6	24
510 171 101	SIM Module, ITA, 34 Position	19, 26, 183
510 171 102	SIM Module, ITA, 34 Position, Fully Loaded with VTAC HSD Double Ended and Right Angle Inserts (610 151 106)	23
510 171 103	PCB Adapter, ITA, SIM, VTAC HSD, 34 Position, to 6 USB 3.0	25
510 171 104	PCB Adapter, ITA, SIM, VTAC HSD, 5 Position, to 1 USB 3.0	24
510 171 105	PCB Adapter, ITA, SIM, VTAC HSD, 6 Position, to 1 Cat 6	24
510 180 101	Signal Insert, Receiver, SIM QuadraPaddle, 4 Positions	19, 21, 41
510 181 101	Signal Insert, ITA, SIM QuadraPaddle, 4 Positions	19, 21, 41
515 109 001	Cable Assembly, 68 Pin Male VHDCI (Thumb Screws) to 68 Pin Male VHDCI (Thumb Screws), 18"	191, 192
515 109 002	Cable Assembly, 68 Pin Male VHDCI (Thumb Screws) to 68 Pin Male VHDCI (Thumb Screws) 36"	191

Part #	Description	Page Number
515 109 007	Cable Assembly, 96 Pin Female SCSI (Spring Latch) to 96 Pin Female SCSI, Double Ended, 18"	194
515 109 008	Cable Assembly, 96 Pin Female SCSI (Spring Latch) to 96 Pin Male SCSI, Double Ended, 36"	194
515 109 113	Cable Assembly, 68 Pin Female SCSI (Thumb Screws) to 68 Pin Male VHDCI (Thumb Screws), 18"	191
515 109 114	Cable Assembly, 68 Pin Female SCSI (Thumb Screws) to 68 Pin Male VHDCI (Thumb Screws), 36"	191
515 109 117	Cable Assembly, 68 Pin Female SCSI (Thumb Screws) to 68 Pin Female SCSI (Thumb Screws), 18"	191
515 109 118	Cable Assembly, 68 Pin Female SCSI (Thumb Screws) to 68 Pin Female SCSI (Thumb Screws), 36"	191
515 109 119	Cable Assembly, 68 Pin Female SCSI (Thumb Screws) to 68 Pin Male SCSI (Spring Latch), 18"	191, 192
515 109 120	Cable Assembly, 68 Pin Female SCSI (Thumb Screws) to 68 Pin Male SCSI (Spring Latch), 36"	191
515 109 121	Cable Assembly, 68 Pin Female SCSI (Thumb Screws) to 68 Pin Male SCSI (Thumb Screws), 18"	191
515 109 122	Cable Assembly, 68 Pin Female SCSI (Thumb Screws) to 68 Pin Male SCSI (Thumb Screws), 36"	191
515 109 130	Cable Assembly, 68 Pin Female SCSI (Thumb Screws) to 68 Pin Female SCSI (Spring Latch), 18"	191
515 109 131	Cable Assembly, 68 Pin Female SCSI (Thumb Screws) to 68 Pin Female SCSI (Spring Latch), 36"	191
515 109 133	Cable Assembly, 100 Pin Male SCSI (Thumb Screws) to 100 Pin Male SCSI, Twisted Pair, Double Ended, 36"	193
515 109 134	Cable Assembly, 100 Pin Male SCSI (Thumb Screws) to 100 Pin Male SCSI, Twisted Pair, Double Ended, 18"	193
515 109 162	Cable Assembly, 32 Pin .100" (2.54 mm) Pitch Ribbon Cable, Double Ended, 20"	195
515 109 163	Cable Assembly, 32 Pin .100" (2.54 mm) Pitch Ribbon Cable, Double Ended, 36"	195
610 102 109	Coaxial Contact, Receiver, 20/26 GHz, Crimp/Clamp for SF142B	243, 244
610 102 110	Coaxial Contact, ITA, 20/26 GHz, Crimp/Clamp for SF142B	243, 244
610 102 114	Coaxial Contact, Receiver/ITA, 40 GHz	250
610 102 118	Coaxial Contact, ITA, 20/26 GHz, Flex 402, Solder (Only Available in Patchcords)	243, 244
610 102 119	Coaxial Contact, Receiver, 20/26 GHz, Flex 402, Solder (Only Available in Patchcords)	243, 244
610 102 132	Coaxial Contact, ITA, 75 Ohm HD, sm59/U Belden 1855A, 3 GHz, Crimp	242
610 102 133	Coaxial Contact, Receiver, 75 Ohm HD, sm59/U Belden 1855A, 3 GHz, Crimp	242
610 102 134	Coaxial Contact, ITA, 20/26 GHz with SMA Adapter	248
610 102 135	Coaxial Contact, Receiver, 20/26 GHz with SMA Adapter	248
610 103 115	Mini Coaxial Contact, ITA, RG316	213, 214
610 103 129	Mini Coaxial Contact, ITA, with two .025" Square Posts, Wire Wrap	214
610 103 130	Mini Coaxial Contact, ITA, RG178	214
610 103 136	Mini Coaxial Contact, ITA, 24 AWG	214
610 103 140	Mini Coaxial Contact, ITA, Solder Sleeve, RG316 & RG178	215
610 103 150	Mini Coaxial Contact, ITA, two .025" Round Posts for PCB, .075" Spacing	215
610 103 152	Mini Coaxial Contact, ITA, RG316 Double Shield	214
610 103 161	Mini Coaxial Contact, ITA, 24 & 26 AWG Twisted Pair	214
610 103 169	Coaxial Contact, ITA, 75 Ohm, RG179, Crimp	240
610 103 172	Mini Coaxial Contact, ITA, 22 AWG	214
610 103 184	Mini Coaxial Contact, ITA, 22 AWG, Twisted Pair	214
610 104 114	Mini Coaxial Contact, Receiver, RG316	213, 214
610 104 140	Mini Coaxial Contact, Receiver, with two .025" Square Posts, Wire Wrap	214
610 104 141	Mini Coaxial Contact, Receiver, RG178	214
610 104 142	Mini Coaxial Contact, Receiver, Solder Sleeve, RG316 & RG178	215
610 104 149	Mini Coaxial Contact, Receiver, RG316 Double Shield	214
610 104 157	Coaxial Contact, Receiver, 75 Ohm, RG179, Crimp	240
610 104 160	Mini Coaxial Contact, Receiver, Right Angle Posts for PCB Mount	214, 224
610 110 101	Signal Contact, Receiver, TriPaddle, 7 Amp, 20-24 AWG, 30µ" Gold, Crimp/Solder	198, 199, 246
610 110 108	Signal Contact, TriPaddle, ITA, 7 Amp, 20-24 AWG, 30µ" Gold, Crimp/Solder	198, 199, 246
610 110 113	Signal Contact, TriPaddle, ITA, 7 Amp, .025" Post for Wire Wrap, 30µ" Gold	199, 246
610 110 128	Signal Contact, TriPaddle, Receiver, 10 Amp, 14 AWG max, 50µ" Gold, Crimp/Solder	198, 199, 246
610 110 129	Signal Contact, TriPaddle, ITA, 10 Amp, 14-18 AWG max, 30µ" Gold, Crimp/Solder	198, 199, 246
610 110 146	Signal Contact, TriPaddle, ITA, 7 Amp, 20-24 AWG, 50µ" Gold,Crimp/Solder	199
610 110 167	Signal Contact, TriPaddle, Receiver, 7 Amp, 26-28 AWG, 30µ" Gold, Crimp/Solder	198, 199, 246
610 110 169	Signal Contact, TriPaddle, ITA, 7 Amp, 26-28 AWG, 30µ" Gold, Crimp/Solder	198, 199, 246
610 110 177	Signal Contact, Receiver, TriPaddle, 10 Amp, 14-18 AWG, 30µ" Gold	199, 246
610 110 179	Signal Contact, TriPaddle, Receiver, 5 Amp, .025" Round Post, 30µ" Gold	199, 246
610 113 131	Thermocouple Contact, Receiver, Chromel	255
610 113 132	Thermocouple Contact, Receiver, Alumel	255
610 113 133	Thermocouple Contact, ITA, Chromel	255
610 113 134	Thermocouple Contact, ITA, Alumel	255
610 113 144	Twinaxial Contact, Receiver	252
610 113 145	Twinaxial Contact, ITA	252
610 113 170	Fiber Optic Contact, Receiver, Mini Fiber Optic, Polymer Optic Fiber	259
610 113 171	Fiber Optic Contact, ITA, Mini Fiber Optic, Polymer Optic Fiber	259
610 113 172	Fiber Optic Contact, Receiver, Mini Fiber Optic, Multimode Glass Fiber	260
610 113 173	Fiber Optic Contact, ITA, Mini Fiber Optic, Multimode Glass Fiber	260
610 115 124	Mini Power Contact, ITA, 8 AWG (max.), 50µ" Gold, Solder	210
610 115 125	Mini Power Contact, ITA, 8 AWG (max.), 30µ" Gold, Solder	210
610 116 112	Mini Power Contact, Receiver, 8 AWG (max.), 50µ" Gold, Solder	210
610 131 101	Pneumatic Contact, Receiver, Ferruless Fitting, for 3/8" OD, .250" ID (9.5 x 6 mm) Tubing	261

Part #	Description	Page Number
610 131 104	Pneumatic Contact, Receiver, Hose Barb, for 3/8" ID [9.5 mm] Tubing	261
610 131 106	Pneumatic Contact, Receiver, Hose Barb, for 1/8" ID [4 mm] Tubing	261
610 131 107	Pneumatic Contact (with valve), Hose Barb, for 1/8" ID [4 mm] Tubing	261
610 131 108	Mini Pneumatic Contact, Receiver, Hose Barb for 1/8" [3.2 mm] ID Tubing, Fits Mini Coaxial or Mini Power Modules	263
610 132 101	Pneumatic Contact, ITA, Ferruless Fitting, for 3/8" OD, .250" ID (9.5 x 6 mm) Tubing	261
610 132 104	Pneumatic Contact, ITA, Hose Barb, for 3/8" ID [9.5 mm] Tubing	261
610 132 105	Pneumatic Contact, ITA, Hose Barb, for 1/8" ID [4 mm] Tubing	261
610 132 106	Mini Pneumatic Contact, ITA, Hose Barb for 1/8" [3.2 mm] ID Tubing, Fits Mini Coaxial or Mini Power Modules	263
610 138 109	Signal Contact, ITA, QuadraPaddle, 5 Amp, 22–24 AWG, Crimp/Solder	184, 185
610 138 112	Signal Contact, ITA, QuadraPaddle, 5 Amp, 26–30 AWG, Crimp/Solder	184, 185
610 138 115	Signal Contact, ITA, QuadraPaddle, 5 Amp, Twin Male Round Post	184, 185
610 138 117	Signal Contact, Receiver, QuadraPaddle, 5 Amp, Male Adapter, .025" Round Post	185
610 138 118	Signal Contact, Receiver, QuadraPaddle, 5 Amp, .025" Square Post for Wire Wrap	185
610 138 122	Signal Contact, ITA, QuadraPaddle, 5 Amp, .025" Square Post for Wire Wrap, with Anti-Rotation	184, 185
610 138 200	Signal Contact, Receiver, QuadraPaddle, 5 Amp, 30µ" Gold, Twin Female, Replacement Contact	185
610 138 216	Signal Contact, Receiver, QuadraPaddle, 5 Amp, 30µ" Gold, 22-28 AWG, Crimp	184, 185
610 140 101	Micro Coaxial Contact, Receiver, RG316, Crimp	227
610 140 102	Micro Coaxial Contact, Receiver, RG178, Crimp	227
610 140 103	Micro Coaxial Contact, Receiver, RG179, Crimp	227
610 140 104	Micro Coaxial Contact, Receiver, RG316 Double Shield, Solder	227
610 141 101	Micro Coaxial Contact, ITA, RG316, Crimp	227
610 141 102	Micro Coaxial Contact, ITA, RG178, Crimp	227
610 141 103	Micro Coaxial Contact, ITA, RG179, Crimp	227
610 141 104	Micro Coaxial Contact, ITA, RG316 Double Shield, Solder	227
610 142 101	Micro Power Contact, Receiver, 12-14 AWG, Crimp	226
610 142 102	Micro Power Contact, Receiver, PCB Mount	226
610 143 101	Micro Power Contact, ITA, 12-14 AWG, Crimp	226
610 149 101	High Power Contact, Receiver, 150 Amps, 2 AWG, 30µ" Gold	237
610 150 101	High Power Contact, ITA, 150 Amps, 2 AWG, 30µ" Gold	237
610 151 101	High Speed Insert, Receiver/ITA, SIM, 12.5 Gbps, 50µ", VTAC HSD (Only Available in Patchcords)	19, 20, 41
610 151 102	Blank Insert Kit, Receiver/ITA, SIM VTAC HSD, 10 Pieces	19, 22, 23, 24, 25, 27
610 151 103	High Speed Insert, Receiver/ITA, SIM, 50µ", VTAC HSD, Double Ended Insert (For Use with Right Angle Only)	19, 22, 23, 24, 25, 180
610 151 104	High Speed Insert, Receiver/ITA, SIM, 50µ", VTAC HSD, Right Angle Insert	19, 22, 23, 24, 25, 180
610 151 105	High Speed Insert, Receiver/ITA, SIM, 50µ", VTAC HSD, Retention Insert (For Use with Right Angle Only)	19, 22, 23, 24, 25, 180
610 151 106	High Speed Insert, Receiver/ITA, SIM, 50µ", VTAC HSD Kit (For Use with Right Angle Only)	19, 22, 23, 180
7-101 914 000-036	Signal Patchcord, ITA, TriPaddle, 36", 14 AWG, Single Ended	200
7-101 914 101-006	Signal Patchcord, ITA, TriPaddle, 6", 14 AWG, Double Ended Jumpers	200
7-102 914 000-036	Signal Patchcord, Receiver, TriPaddle, 10 Amp, 36", 14 AWG, Single Ended	200
7-103 422 000-036	Signal Patchcord, ITA, TriPaddle, 36", 22 AWG Twisted Pair, Single Ended	200
7-103 422 103-006	Signal Patchcord, ITA, TriPaddle, 6", 22 AWG, Double Ended Jumpers	200
7-103 424 000-036	Signal Patchcord, ITA, TriPaddle, 36", 24 AWG Twisted Pair, Single Ended	200
7-103 424 103-006	Signal Patchcord, ITA, TriPaddle, 6", 24 AWG, Double Ended Jumpers	200
7-103 872 596-036	Signal Patchcord, ITA, TriPaddle, 36", USB 2.0 Wire, to USB Type A Plug	200
7-103 922 000-036	Signal Patchcord, ITA, TriPaddle, 36", 22 AWG, Single Ended	200
7-103 922 103-006	Signal Patchcord, ITA, TriPaddle, 6", 22 AWG, Double Ended Jumpers	200
7-103 924 000-036	Signal Patchcord, ITA, TriPaddle, 36", 24 AWG, Single Ended	200
7-103 924 103-006	Signal Patchcord, ITA, TriPaddle, 6", 24 AWG, Double Ended Jumpers	200
7-104 422 000-036	Signal Patchcord, Receiver, TriPaddle, 36", 22 AWG Twisted Pair, Single Ended	200
7-104 424 000-036	Signal Patchcord, Receiver, TriPaddle, 36", 24 AWG Twisted Pair, Single Ended	200
7-104 872 596-036	Signal Patchcord, Receiver, TriPaddle, 36", USB 2.0 Wire, to USB Type A Plug	200
7-104 922 000-036	Signal Patchcord, Receiver, TriPaddle, 36", 22 AWG, Single Ended	200
7-104 924 000-036	Signal Patchcord, Receiver, TriPaddle, 36", 24 AWG, Single Ended	200
7-105 870 595-036	Signal Patchcord, ITA, TriPaddle, 36", CAT5e, to RJ45 Plug	200
7-106 870 595-036	Signal Patchcord, Receiver, TriPaddle, 36", CAT5e, to RJ45 Plug	200
7-121 422 000-036	Signal Patchcord, ITA, QuadraPaddle, 36", 22 AWG Twisted Pair, Single Ended	186
7-121 422 121-006	Signal Patchcord, ITA, QuadraPaddle, 6", 22 AWG Twisted Pair, Double Ended Jumpers	186
7-121 424 000-036	Signal Patchcord, ITA, QuadraPaddle, 36", 24 AWG Twisted Pair, Single Ended	186
7-121 424 121-006	Signal Patchcord, ITA, QuadraPaddle, 6", 24 AWG Twisted Pair, Double Ended Jumpers	186
7-121 872 596-036	Signal Patchcord, ITA, QuadraPaddle, 36", USB 2.0 Wire, to USB Type A Plug	186
7-121 922 000-036	Signal Patchcord, ITA, QuadraPaddle, 36", 22 AWG, Single Ended	186
7-121 922 121-006	Signal Patchcord, ITA, QuadraPaddle, 6", 22 AWG, Double Ended Jumpers	186
7-121 924 000-006	Signal Patchcord, ITA, QuadraPaddle, 6", 24 AWG, Single Ended	186
7-121 924 000-036	Signal Patchcord, ITA, QuadraPaddle, 36", 24 AWG, Single Ended	186
7-121 924 121-006	Signal Patchcord, ITA, QuadraPaddle, 6", 24 AWG, Double Ended Jumpers	186
7-123 870 595-036	Signal Patchcord, ITA, QuadraPaddle, 36", CAT5e, to RJ45 Plug	186
7-123 426 000-036	Signal Patchcord, ITA, QuadraPaddle, 36", 26 AWG Twisted Pair, Single Ended	186
7-124 422 000-036	Signal Patchcord, Receiver, QuadraPaddle, 22 AWG Twisted Pair, Single Ended	186

Part #	Description	Page Number
7-124 424 000-036	Signal Patchcord, Receiver, QuadraPaddle, 24 AWG Twisted Pair, Single Ended	186
7-124 870 595-036	Signal Patchcord, Receiver, QuadraPaddle, CAT5e, to RJ45 Plug	186
7-124 872 596-036	Signal Patchcord, Receiver, QuadraPaddle, USB 2.0 Wire, to USB Type A Plug	186
7-124 922 000-036	Signal Patchcord, Receiver, QuadraPaddle, 22 AWG, Single Ended	186
7-124 924 000-036	Signal Patchcord, Receiver, QuadraPaddle, 24 AWG, Single Ended	186
7-141 861 000-XXX	Signal Patchcord, ITA, SIM VTAC HSD, Twinax Flying Leads, 1 Position	20, 181
7-141 702 731-XXX	Signal Patchcord, ITA, SIM VTAC HSD, Rosenberger HSD Plug, 1 Position20, 181	20, 181
7-141 877 655-XXX	Signal Patchcord, ITA, SIM VTAC HSD, 36", DVI-D Male Dual Link, 5 Position	20, 181
7-141 890 690-XXX	Signal Patchcord, ITA, SIM VTAC HSD, USB 3.0 Type A Male, 2 Position	20, 181
7-141 890 691-XXX	Signal Patchcord, ITA, SIM VTAC HSD, USB 3.0 Type A Female, 2 Position	20, 181
7-141 890 692-XXX	Signal Patchcord, ITA, SIM VTAC HSD, USB 3.0 Type B Male, 2 Position	20, 181
7-141 891 693-XXX	Signal Patchcord, ITA, SIM VTAC HSD, HDMI Male, 3 Position	20, 181
7-141 892 700-XXX	Signal Patchcord, ITA, SIM VTAC HSD, SATA Male, 1 Position	20, 181
7-141 893 694-XXX	Signal Patchcord, ITA, SIM VTAC HSD, RJ45 Plug, 2 Position	20, 181
7-141 895 000-XXX	Signal Patchcord, ITA, SIM VTAC HSD, 24 AWG, Flying Leads, 1 Position	20, 181
7-141 896 722-XXX	Signal Patchcord, ITA, SIM VTAC HSD, Mini-SAS HD Plug, 4 Position	20, 181
7-142 861 000-XXX	Signal Patchcord, Receiver, SIM VTAC HSD, Twinax Flying Leads, 1 Position	20, 181
7-142 702 731-XXX	Signal Patchcord, Receiver, SIM VTAC HSD, Rosenberger HSD Plug, 1 Position	20, 181
7-142 877 655-XXX	Signal Patchcord, Receiver, SIM VTAC HSD, 36", DVI-D Male Dual Link, 5 Position	20, 181
7-142 890 690-XXX	Signal Patchcord, Receiver, SIM VTAC HSD, USB 3.0 Type A Male, 2 Position	20, 181
7-142 890 691-XXX	Signal Patchcord, Receiver, SIM VTAC HSD, USB 3.0 Type A Female, 2 Position	20, 181
7-142 890 692-0XX	Signal Patchcord, Receiver, SIM VTAC HSD, USB 3.0 Type B Male, 2 Position	20, 181
7-142 891 693-XXX	Signal Patchcord, Receiver, SIM VTAC HSD, HDMI Male, 3 Position	20, 181
7-142 892 700-XXX	Signal Patchcord, Receiver, SIM VTAC HSD, SATA Male, 1 Position	20, 181
7-142 893 694-XXX	Signal Patchcord, Receiver, SIM VTAC HSD, RJ45 Plug, 2 Position	20, 181
7-142 895 000-XXX	Signal Patchcord, Receiver, SIM VTAC HSD, 24 AWG, Flying Leads, 1 Position	20, 181
7-142 896 722-0XX	Signal Patchcord, Receiver, SIM VTAC HSD, Mini-SAS HD Plug, 4 Position	20, 181
7-151 924 000-036	Cable Assembly, ITA, SIM QuadraPaddle Insert, 36", Flying Leads	19
7-151 924 000-072	Cable Assembly, ITA, SIM QuadraPaddle Insert, 72", Flying Leads	19
7-152 924 000-036	Cable Assembly, Receiver, SIM QuadraPaddle Insert, 36", Flying Leads	19
7-152 924 000-072	Cable Assembly, Receiver, SIM QuadraPaddle Insert, 72", Flying Leads	19
7-221 902 000-036	High Power Patchcord, Receiver, 150 Amps, 36", 2 AWG, Single Ended	237
7-222 902 000-036	High Power Patchcord, ITA, 150 Amps, 36", 2 AWG, Single Ended	237
7-231 912 000-036	Mini Power Patchcord, ITA, 40 Amp, 36", 12 AWG, White Wire, Single Ended	210
7-232 912 000-036	Mini Power Patchcord, Receiver, 40 Amp, 36", 12 AWG, White Wire, Single Ended	210
7-251 912 000-036	Power Patchcord, ITA, Micro Power, 36", 12 AWG White, Single Ended	226
7-252 912 000-036	Power Patchcord, Receiver, Micro Power, 36", 12 AWG White, Single Ended	226
7-331 116 000-036	Mini Coaxial Patchcord, ITA, 50 Ohm, 36", RG316, Single Ended	214
7-332 116 000-036	Mini Coaxial Patchcord, Receiver, 50 Ohm, 36", RG316, Single Ended	214
7-333 178 000-036	Mini Coaxial Patchcord, ITA, 50 Ohm, 36", RG178, Single Ended	214
7-334 178 000-036	Mini Coaxial Patchcord, Receiver, 50 Ohm, 36", RG178, Single Ended	214
7-335 924 000-036	Mini Coaxial Patchcord, ITA, 50 Ohm, 36", 24 AWG, Single Ended	214
7-338 116 000-036	Mini Coaxial Solder Sleeve Patchcord, Receiver, 50 Ohm, 36", RG316, Single Ended	216
7-338 178 000-036	Mini Coaxial Solder Sleeve Patchcord, Receiver, 50 Ohm, 36", RG178, Single Ended	216
7-339 116 000-036	Mini Coaxial Solder Sleeve Patchcord, ITA, 50 Ohm, 36", RG316, Single Ended	182
7-339 178 000-036	Mini Coaxial Solder Sleeve Patchcord, ITA, 50 Ohm, 36", RG178, Single Ended	182
7-361 116 000-036	Coaxial Patchcord, ITA, Micro Coaxial, 36", RG316 Tan, Single Ended	193
7-362 116 000-036	Coaxial Patchcord, Receiver, Micro Coaxial, 36" RG316 Tan, Single Ended	193
7-363 178 000-036	Coaxial Patchcord, ITA, Micro Coaxial, 36", RG178BU Tan, Single Ended	193
7-364 178 000-036	Coaxial Patchcord, Receiver, Micro Coaxial, 36", RG178BU Tan, Single Ended	193
7-365 179 000-036	Coaxial Patchcord, ITA, Micro Coaxial, 36", RG179U Tan, Single Ended	193
7-366 179 000-036	Coaxial Patchcord, Receiver, Micro Coaxial, 36", RG179U Tan, Single Ended	193
7-367 117 000-036	Coaxial Patchcord, ITA, Micro Coaxial, 36", RG316 Double Shield Tan, Single Ended	193
7-368 117 000-036	Coaxial Patchcord, Receiver, Micro Coaxial, 36", RG316 Double Shield Tan, Single Ended	193
7-381 179 000-036	Coaxial Patchcord, ITA, 75 Ohm, 36", RG179, Single Ended	199
7-382 179 000-036	Coaxial Patchcord, Receiver, 75 Ohm, 36", RG179, Single Ended	199
7-383 143 000-036	20/26 GHz Coaxial Patchcord, ITA, 50 Ohm, 36", SF142B, Single Ended	203
7-384 143 000-036	20/26 GHz Coaxial Patchcord, Receiver, 50 Ohm, 36", SF142B, Single Ended	203
7-387 102 000-036	20/26 GHz Coaxial Patchcord, ITA, 50 Ohm, 36", Flex 402, Single Ended	203
7-388 102 000-036	20/26 GHz Coaxial Patchcord, Receiver, 50 Ohm, 36", Flex 402, Single Ended	203
7-401 423 000-036	Twinaxial Patchcord, ITA, 30 Amp, 36", 22 AWG Shielded Twisted Pair, Single Ended	211
7-402 423 000-036	Twinaxial Patchcord, Receiver, 30 Amp, 36", 22 AWG Shielded Twisted Pair, Single Ended	211
7-409 803 000-036	Thermocouple Patchcord, ITA, 36", 20 AWG, Chromel and Alumel, Single Ended	214
7-410 803 000-036	Thermocouple Patchcord, Receiver, 36", 20 AWG, Chromel and Alumel, Single Ended	214
7-411 873 000-036	Coaxial Patchcord, ITA, 75 Ohm HD, 36", sm59/U Belden 1855A, Single Ended	201
7-412 873 000-036	Coaxial Patchcord, Receiver, 75 Ohm HD, 36", sm59/U Belden 1855A, Single Ended	201

Part #	Description	Page Number
7-413 845 000-036	Fiber Optic Patchcord, ITA, Mini Fiber Optic, 36", Polymer Optic Fiber, Single Ended	218
7-339 116 000-036	Mini Coaxial Solder Sleeve Patchcord, ITA, 50 Ohm, 36", RG316, Single Ended	216
7-339 178 000-036	Mini Coaxial Solder Sleeve Patchcord, ITA, 50 Ohm, 36", RG178, Single Ended	216
7-361 116 000-036	Coaxial Patchcord, ITA, Micro Coaxial, 36", RG316 Tan, Single Ended	229
7-362 116 000-036	Coaxial, Patchcord, Receiver, Micro Coaxial, 50 Ohm, 36", RG316 Tan, Single Ended	229
7-363 178 000-036	Coaxial Patchcord, ITA, Micro Coaxial, 36", RG178BU Tan, Single Ended	229
7-364 178 000-036	Coaxial Patchcord, Receiver, Micro Coaxial, 36", RG178BU Tan, Single Ended	229
7-365 179 000-036	Coaxial Patchcord, ITA, Micro Coaxial, 36", RG179U Tan, Single Ended	229
7-366 179 000-036	Coaxial Patchcord, Receiver, Micro Coaxial, 36", RG179U Tan, Single Ended	229
7-367 117 000-036	Coaxial Patchcord, ITA, Micro Coaxial, 36", RG316 Double Shield Tan, Single Ended	229
7-368 117 000-036	Coaxial Patchcord, Receiver, Micro Coaxial, 36", RG316 Double Shield Tan, Single Ended	229
7-381 179 000-036	Coaxial Patchcord, ITA, 75 Ohm, 36", RG179, Single Ended	240
7-382 179 000-036	Coaxial Patchcord, Receiver, 75 Ohm, 36", RG179, Single Ended	240
7-383 143 000-036	20/26 GHz Coaxial Patchcord, ITA, 50 Ohm, 36", SF142B, Single Ended	244
7-384 143 000-036	20/26 GHz Coaxial Patchcord, Receiver, 50 Ohm, 36", SF142B, Single Ended	244
7-387 102 000-036	20/26 GHz Coaxial Patchcord, ITA, 50 Ohm, 36", Flex 402, Single Ended	244
7-388 102 000-036	20/26 GHz Coaxial Patchcord, Receiver, 50 Ohm, 36", Flex 402, Single Ended	244
7-401 423 000-036	Twinaxial Patchcord, ITA, 3 Amp, 36", 22 AWG Shielded Twisted Pair, Single Ended	252
7-402 423 000-036	Twinaxial Patchcord, Receiver, 3 Amp, 36", 22 AWG Shielded Twisted Pair, Single Ended	252
7-409 803 000-036	Thermocouple Patchcord, ITA, 36", 24 AWG, Chromel and Alumel, Single Ended	255
7-410 803 000-036	Thermocouple Patchcord, Receiver, 36", 24 AWG, Chromel and Alumel, Single Ended	255
7-411 873 000-036	Coaxial Patchcord, ITA, 75 Ohm HD, 36", sm59/U Belden 1855A, Single Ended	242
7-412 873 000-036	Coaxial Patchcord, Receiver, 75 Ohm HD, 36", sm59/U Belden 1855A, Single Ended	242
7-413 845 000-036	Fiber Optic Patchcord, ITA, Mini Fiber Optic, 36", Polymer Optic Fiber, Single Ended	259
7-413 845 504-036	Fiber Optic Patchcord, ITA, Mini Fiber Optic, 36", Polymer Optic Fiber, to FC with PC Polish	259
7-413 845 510-036	Fiber Optic Patchcord, ITA, Mini Fiber Optic, 36", Polymer Optic Fiber, to SC with PC Polish	259
7-414 845 000-036	Fiber Optic Patchcord, Receiver, Mini Fiber Optic, 36", Polymer Optic Fiber, Single Ended	259
7-414 845 504-036	Fiber Optic Patchcord, Receiver, Mini Fiber Optic, 36", Polymer Optic Fiber, to FC with PC Polish	259
7-414 845 507-036	Fiber Optic Patchcord, Receiver, Mini Fiber Optic, 36", Polymer Optic Fiber, to ST with PC Polish	259
7-414 845 510-036	Fiber Optic Patchocord, Receiver, Mini Fiber Optic, 36", Polymer Optic Fiber, to SC with PC Polish	259
7-415 804 000-036	Fiber Optic Patchcord, ITA, Mini Fiber Optic, 36", Multimode Glass Fiber, Single Ended	260
7-415 804 503-036	Fiber Optic Patchcord, ITA, Mini Fiber Optic, 36", Multimode Glass Fiber, to FC with SPC Polish	260
7-415 804 506-036	Fiber Optic Patchcord, ITA, Mini Fiber Optic, 36", Multimode Glass Fiber, to ST with SPC Polish	260
7-415 804 509-036	Fiber Optic Patchcord, ITA, Mini Fiber Optic, 36", Multimode Glass Fiber, to SC with SPC Polish	260
7-415 804 512-036	Fiber Optic Patchcord, ITA, Mini Fiber Optic, 36", Multimode Glass Fiber, to LC with SPC Polish	260
7-415 804 663-036	Fiber Optic Patchcord, ITA, Mini Fiber Optic, 36", Multimode Glass Fiber, to SMA-F with SPC Polish	260
7-416 804 000-036	Fiber Optic Patchcord, Receiver, Mini Fiber Optic, 36", Multimode Glass Fiber, Single Ended	260
7-416 804 503-036	Fiber Optic Patchcord, Receiver, Mini Fiber Optic, 36", Multimode Glass Fiber, to FC with SPC Polish	260
7-416 804 506-036	Fiber Optic Patchcord, Receiver, Mini Fiber Optic, 36", Multimode Glass Fiber, to ST with SPC Polish	260
7-416 804 509-036	Fiber Optic Patchcord, Receiver, Mini Fiber Optic, 36", Multimode Glass Fiber, to SC with SPC Polish	260
7-416 804 512-036	Fiber Optic Patchcord, Receiver, Mini Fiber Optic, 36", Multimode Glass Fiber, to LC with SPC Polish	260
7-416 804 663-036	Fiber Optic Patchcord, Receiver, Mini Fiber Optic, 36", Multimode Glass Fiber, to SMA-F with SPC Polish	260
7-528 143 000-036	Coaxial Patchcord, SMA Plug, 36", SF142 Tan, Single Ended	248
7-531 102 000-036	Coaxial Patchcord, SMA Plug, 36", Flex 402 Blue, Single Ended	248
7-632 195 632-036	Coaxial Patchcord, 2.92mm Plug, 36", Double Ended (40 GHz)	250
910 101 102	Tool, Crimp, 10 Amp TriPaddle, Thermocouple, Micro Power, Receiver and ITA, Locator Required	199, 255
910 101 103	Tool, Crimp, QuadraPaddle and TriPaddle, Receiver and ITA Contacts, Locator Required	185, 199
910 101 115	Tool, Crimp, Coaxial	216
910 101 118	Tool, Crimp, Coaxial Contacts, ITA, 24 AWG Wire	216
910 101 124	Tool, Crimp, 20/26 GHz Coaxial Contacts, Receiver and ITA	244
910 101 125	Tool, Crimp, QuadraPaddle, Receiver	185
910 101 131	Tool, Crimp, Micro Coaxial RG178, Receiver and ITA	229
910 101 132	Tool, Crimp, Micro Coaxial, RG179 & RG316, Receiver and ITA	229
910 101 135	Tool, Locator, Micro Coaxial, Receiver	229
910 101 139	Tool, Locator, Micro Coaxial, ITA	229
910 102 106	Tool Kit, 75 Ohm Coaxial Contacts, Receiver	240
910 102 107	Tool Kit, 75 Ohm Coaxial, ITA	240
910 102 116	Tool, Crimp Kit (Pneumatic Crimp Tool, Locator and Die), High Power, Receiver and ITA	237
910 102 117	Tool, Crimp Kit (Locator and Die), High Power, Receiver and ITA	237
910 104 107	Tool, Locator, TriPaddle, ITA	199
910 104 116	Tool, Locator, TriPaddle, Receiver	199
910 104 118	Tool, Locator, TriPaddle, ITA	199
910 104 127	Tool, Locator, TriPaddle, Receiver	199
910 104 128	Tool, Locator, Coaxial Contacts, 24 AWG Wire	216
910 104 134	Tool, Locator, Thermocouple, Receiver	255
910 104 135	Tool, Locator, Thermocouple, ITA	255

Part #	Description	Page Number
910 104 139	Tool, Hex Crimp for Outer Shield, 75 Ohm Coaxial, Receiver and ITA	240, 242
910 104 140	Tool, Locator, QuadraPaddle, ITA Contact	185
910 104 144	Tool, Locator, Micro Power, ITA	225
910 104 145	Tool, Locator, Micro Power, Receiver	225
910 110 102	Tool, Extraction, TriPaddle and Thermocouple, Receiver and ITA	216, 255
910 110 111	Tool, Extraction, ITA, QuadraPaddle	185
910 110 112	Tool, Extraction, Receiver, QuadraPaddle	185
910 112 104	Tool, Extraction, Mini Power/Mini Coaxial/Mini Pneumatic Contacts, Receiver and ITA	210, 216, 263
910 112 117	Tool, Extraction, 75 Ohm and 20/26 GHz Coaxial, Receiver and ITA	240, 242, 244
910 112 123	Tool, Extraction, Micro Power/Micro Coaxial Contacts	229
910 112 125	Tool, Extraction, Mini Fiber Optic, Receiver and ITA	259, 260
910 112 129	Tool, Extraction, High Power, Receiver and ITA	237
910 112 130	Extraction Tool, SIM, Receiver and ITA	22, 23, 24, 25, 180
910 112 132	Tool, Insertion, Right Angle, VTAC HSD (For Use with Right Angle Only)	22, 23
910 113 106	Tool, Insertion, QuadraPaddle ITA Wire-Wrap Contact	185
910 121 119	Tool, Center Conductor Forming, Mini Coaxial, Receiver (used before assembly)	216
910 121 126	Tool, Outer Shield Conductor Expanding, Mini Coaxial, ITA	216
910 121 131	Tool, Weight Gage Kit, Mini Coaxial, Receiver	216
910 121 142	Tool, Outer Shield Conductor Expanding, Mini Coaxial, ITA	216
910 121 143	Tool, Center Conductor Enlarging, Receiver	216
910 121 144	Solder Kit, Mini Coaxial Contacts with Solder Sleeve (includes Raychem Holding Fixture AD-1319)	216
910 121 149	Tool, Adapter for Raychem Holding Fixture (AD-1319-29)	216
910 121 155	Tool, Weight Gage Kit for Mini Coaxial Contacts, ITA	216
910 121 156	Tool, Inspection Depth Gage, Mini Coaxial, Receiver	216
910 121 157	Tool, Inspection Depth Gage, Mini Coaxial, ITA	216
910 121 160	Tool, Steinel Heat Gun with Nozzle – 110V	216
910 121 167	Tool, Steinel Heat Gun with Nozzle – 220V	216
910 121 172	Module Accessory Kit, Quantity 5, 3/32 Allen Wrenches	177
910 121 174	Allen Wrench Kit, Contains 3/32, 7/64 and 5/32	177
910 121 178	Tool, Soldering Fixture, Micro Coaxial, Receiver and ITA	229
910 121 179	Tool, Inspection Depth Gage, Micro Coaxial, Receiver	229
910 121 180	Tool, Inspection Depth Gage, Micro Coaxial, ITA	229
910 121 192	Tool, Fiber Optic Cleaning Pen, Multimode Glass Fiber, Receiver/ITA	259, 260
910 121 199	Tool, Press Kit, for i2 PCB Headers	37

Standard Units of Measurement
[mm]
inches

Technical information in this document is subject to change without notice.

© 2016 Virginia Panel Corporation. All rights reserved.

More Information from VPC!

For more solutions, please visit our website, **vpc.com**. More detailed information about each product is available, such as product drawings, specifications, tech tips, and user manuals. In addition, our advanced search tool can help you find additional products that may not be listed in the catalog. You can also find downloadable literature such as catalogs, brochures and flyers. To learn more about what VPC can do for you, visit **vpc.com**.

VPC's online configuration tools enable you to design and configure your complete test and measurement solution. Choose from designing patchcords, configuring cable assemblies, PCB adapters, or a complete Mass InterConnect solution. We have made it easy to find the right part numbers you will need to make your connections.
Visit **vpc.com/configurators**.

Explore our Mass InterConnect Solutions. VPC's full line of Mass InterConnect solutions range from 2 to 75 modules to satisfy low, medium, and high I/O test and measurement connection requirements. Our Master and iSeries catalogs provide detailed product information on our entire Mass InterConnect product line, to ensure you find and receive the solution ideal for your needs. To request these catalogs, please visit **vpc.com/catalog**.

CONNECTED ORDER
creating order out of wiring chaos

VPC Virginia Panel Corporation

NORTH AND SOUTH AMERICA
1400 New Hope Road
Waynesboro, VA 22980
United States
Phone: +1 540 932 3300
Email: info@vpc.com

EUROPE, MIDDLE EAST, AFRICA
Karlstrasse 32
72666 Neckartailfingen
Germany
Phone: +49 15 227554545
Email: info.emea@vpc.com

ASIA, AUSTRALIA
PO Box 86098
140 Gillies Avenue
Hung Hom, Kowloon
Hong Kong
Phone: +852 2356 8635
Email: info.asia@vpc.com